STRENGTH of MATERIALS

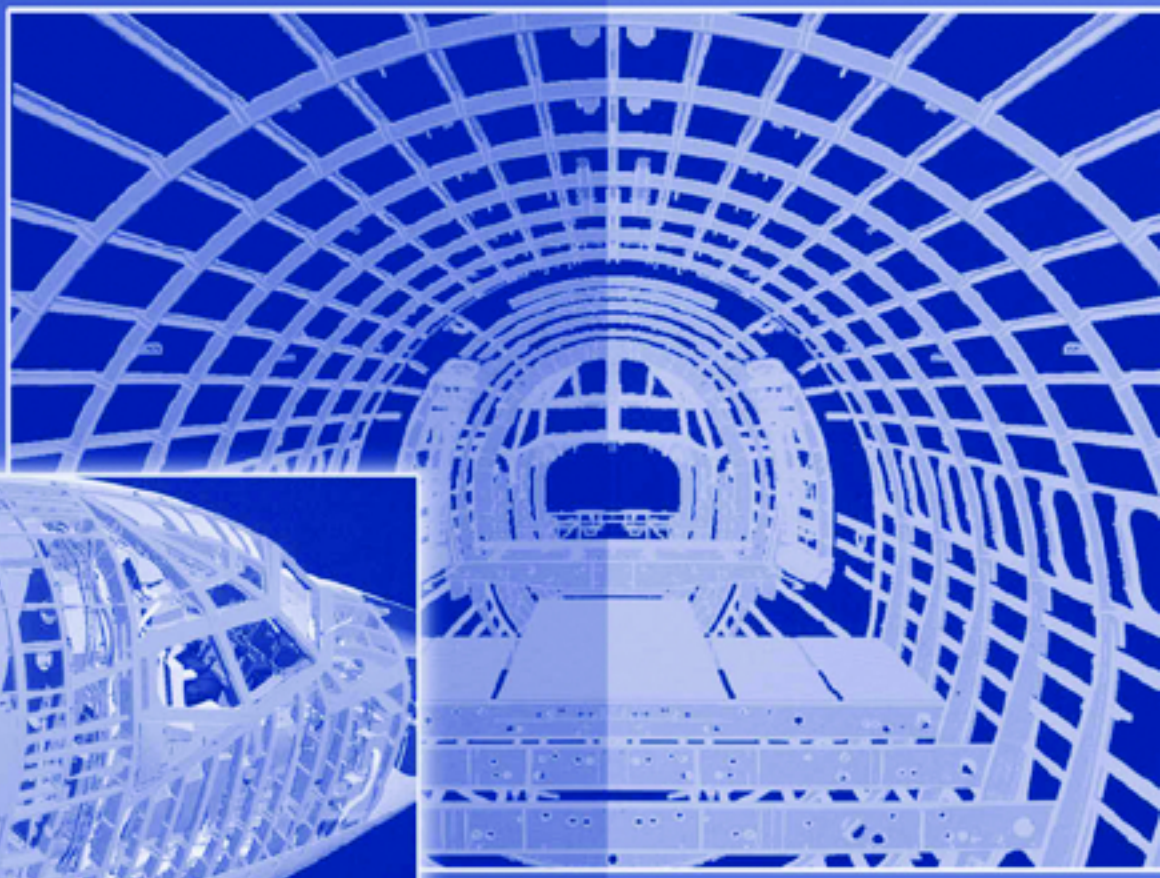

A New Unified Theory for the 21st Century

SURYA PATNAIK & DALE HOPKINS

Strength of Materials

Strength of Materials: A Unified Theory

Surya N. Patnaik
Dale A. Hopkins

ELSEVIER
BUTTERWORTH
HEINEMANN

An Imprint of Elsevier
Amsterdam Boston Heidelberg London New York Oxford
Paris San Diego San Francisco Singapore Sydney Tokyo

Butterworth–Heinemann is an imprint of Elsevier.

Copyright © 2004, Elsevier (USA). All rights reserved.

No part of this publication may be reproduced, stored in a retrieval system, or transmitted in any form or by any means, electronic, mechanical, photocopying, recording, or otherwise, without the prior written permission of the publisher.

Permissions may be sought directly from Elsevier's Science & Technology Rights Department in Oxford, UK: phone: (+44) 1865 843830, fax: (+44) 1865 853333, e-mail: permissions@elsevier.co.uk. You may also complete your request on-line via the Elsevier homepage (http://www.elsevier.com), by selecting 'Customer Support' and then 'Obtaining Permissions'.

∞ Recognizing the importance of preserving what has been written, Elsevier prints its books on acid-free paper whenever possible.

Library of Congress Cataloging-in-Publication Data
Pataik, Surya N.
Strength of materials: a unified theory / Surya N. Pataik, Dale A. Hopkins.
p. cm.
Includes bibliographical references and index.
ISBN 0-7506-7402-4 (alk. paper)
1. Strength of materials. I. Hopkins, Dale A. II. Title.

TA405.P36 2003
620.1′12—dc21 2003048191

British Library Cataloguing-in-Publication Data
A catalogue record for this book is available from the British Library.

The publisher offers special discounts on bulk orders of this book.
For information, please contact:

Manager of Special Sales
Elsevier
200 Wheeler Road
Burlington, MA 01803
Tel: 781-313-4700
Fax: 781-313-4882

For information on all Butterworth–Heinemann publications available, contact our World Wide Web home page at: http://www.bh.com

10 9 8 7 6 5 4 3 2 1

Printed in the United States of America

Contents

Preface *ix*

Chapter 1 Introduction 1
- 1.1 Systems of Units 4
- 1.2 Response Variables 7
- 1.3 Sign Conventions 15
- 1.4 Load-Carrying Capacity of Members 16
- 1.5 Material Properties 28
- 1.6 Stress-Strain Law 30
- 1.7 Assumptions of Strength of Materials 37
- 1.8 Equilibrium Equations 42
- Problems 50

Chapter 2 Determinate Truss 55
- 2.1 Bar Member 55
- 2.2 Stress in a Bar Member 68
- 2.3 Displacement in a Bar Member 72
- 2.4 Deformation in a Bar Member 74
- 2.5 Strain in a Bar Member 74
- 2.6 Definition of a Truss Problem 76
- 2.7 Nodal Displacement 85
- 2.8 Initial Deformation in a Determinate Truss 96
- 2.9 Thermal Effect in a Truss 99
- 2.10 Settling of Support 101

2.11 Theory of Determinate Analysis 104
2.12 Definition of Determinate Truss 113
Problems 122

Chapter 3 Simple Beam 129
3.1 Analysis for Internal Forces 131
3.2 Relationships between Bending Moment, Shear Force, and Load 149
3.3 Flexure Formula 153
3.4 Shear Stress Formula 159
3.5 Displacement in a Beam 164
3.6 Thermal Displacement in a Beam 179
3.7 Settling of Supports 183
3.8 Shear Center 184
3.9 Built-up Beam and Interface Shear Force 197
3.10 Composite Beams 202
Problems 209

Chapter 4 Determinate Shaft 217
4.1 Analysis of Internal Torque 218
4.2 Torsion Formula 222
4.3 Deformation Analysis 224
4.4 Power Transmission through a Circular Shaft 233
Problems 236

Chapter 5 Simple Frames 239
Problems 259

Chapter 6 Indeterminate Truss 263
6.1 Equilibrium Equations 266
6.2 Deformation Displacement Relations 268
6.3 Force Deformation Relations 269
6.4 Compatibility Conditions 269
6.5 Initial Deformations and Support Settling 270
6.6 Null Property of the Equilibrium Equation and Compatibility Condition Matrices 273
6.7 Response Variables of Analysis 273
6.8 Method of Forces or the Force Method 274
6.9 Method of Displacements or the Displacement Method 274
6.10 Integrated Force Method 275
Problems 305

Chapter 7 Indeterminate Beam 311
7.1 Internal Forces in a Beam 315
7.2 IFM Analysis for Indeterminate Beam 317
7.3 Flexibility Matrix 329
7.4 Stiffness Method Analysis for Indeterminate Beam 337
7.5 Stiffness Method for Mechanical Load 339
7.6 Stiffness Solution for Thermal Load 341
7.7 Stiffness Solution for Support Settling 343
7.8 Stiffness Method Solution to the Propped Beam 350
7.9 IFM Solution to Example 7-5 355
7.10 Stiffness Method Solution to Example 7-5 360
Problems 366

Chapter 8 Indeterminate Shaft 371
8.1 Equilibrium Equations 372
8.2 Deformation Displacement Relations 373
8.3 Force Deformation Relations 373
8.4 Compatibility Conditions 375
8.5 Integrated Force Method for Shaft 376
8.6 Stiffness Method Analysis for Shaft 379
Problems 401

Chapter 9 Indeterminate Frame 405
9.1 Integrated Force Method for Frame Analysis 407
9.2 Stiffness Method Solution for the Frame 421
9.3 Portal Frame—Thermal Load 425
9.4 Thermal Analysis of the Frame by IFM 427
9.5 Thermal Analysis of a Frame by the Stiffness Method 429
9.6 Support Settling Analysis for Frame 431
Problems 436

Chapter 10 Two-Dimensional Structures 441
10.1 Stress State in a Plate 441
10.2 Plane Stress State 442
10.3 Stress Transformation Rule 445
10.4 Principal Stresses 448
10.5 Mohr's Circle for Plane Stress 453
10.6 Properties of Principal Stress 456
10.7 Stress in Pressure Vessels 463
10.8 Stress in a Spherical Pressure Vessel 463
10.9 Stress in a Cylindrical Pressure Vessel 466
Problems 470

Chapter 11 Column Buckling 475
11.1 The Buckling Concept 475
11.2 State of Equilibrium 478
11.3 Perturbation Equation for Column Buckling 479
11.4 Solution of the Buckling Equation 481
11.5 Effective Length of a Column 487
11.6 Secant Formula 488
Problems 492

Chapter 12 Energy Theorems 497
12.1 Basic Energy Concepts 498
Problems 550

Chapter 13 Finite Element Method 555
13.1 Finite Element Model 557
13.2 Matrices of the Finite Element Methods 562
Problems 592

Chapter 14 Special Topics 595
14.1 Method of Redundant Force 595
14.2 Method of Redundant Force for a Beam 605
14.3 Method of Redundant Force for a Shaft 613
14.4 Analysis of a Beam Supported by a Tie Rod 615
14.5 IFM Solution to the Beam Supported by a Tie Rod Problem 618
14.6 Conjugate Beam Concept 622
14.7 Principle of Superposition 626
14.8 Navier's Table Problem 629
14.9 A Ring Problem 633
14.10 Variables and Analysis Methods 637
Problems 640

Appendix 1 *Matrix Algebra* *645*
Appendix 2 *Properties of a Plane Area* *659*
Appendix 3 *Systems of Units* *677*
Appendix 4 *Sign Conventions* *681*
Appendix 5 *Mechanical Properties of Structural Materials* *685*
Appendix 6 *Formulas of Strength of Materials* *687*
Appendix 7 *Strength of Materials Computer Code* *703*
Appendix 8 *Answers* *717*
Index *741*

Preface

Strength of materials is a common core course requirement in U.S. universities (and those elsewhere) for students majoring in civil, mechanical, aeronautical, naval, architectural, and other engineering disciplines. The subject trains a student to calculate the response of simple structures. This elementary course exposes the student to the fundamental concepts of solid mechanics in a simplified form. Comprehension of the principles becomes essential because this course lays the foundation for other advanced solid mechanics analyses. The usefulness of this subject cannot be overemphasized because strength of materials principles are routinely used in various engineering applications. We can even speculate that some of the concepts have been used for millennia by master builders such as the Romans, Chinese, South Asian, and many others who built cathedrals, bridges, ships, and other structural forms. A good engineer will benefit from a clear comprehension of the fundamental principles of strength of materials. Teaching this subject should not to be diluted even though computer codes are now available to solve problems.

The theory of solid mechanics is formulated through a set of formidable mathematical equations. An engineer may select an appropriate subset to solve a particular problem. Normally, an error in the solution, if any, is attributed either to equation complexity or to a deficiency of the analytical model. Rarely is the completeness of the basic theory questioned because it was presumed complete, circa 1860, when Saint-Venant provided the strain formulation, also known as the compatibility condition. This conclusion may not be totally justified since incompleteness has been detected in the strain formulation. Research is in progress to alleviate the deficiency. Benefits from using the new compatibility condition have been discussed in elasticity, finite element analysis, and design optimization. In this textbook the compatibility condition has been simplified and applied to solve strength of materials problems.

The theory of strength of materials appears to have begun with the cantilever experiment conducted by Galileo[1] in 1632. His test setup is shown in Fig. P-1. He observed that the

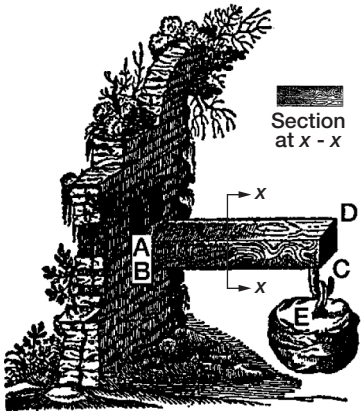

FIGURE P-1 *Galileo's cantilever beam experiment conducted in 1632.*

strength of a beam is not linearly proportional to its cross-sectional area, which he knew to be the case for a strut in tension (shown in Fig. P-2). Coulomb subsequently completed the beam theory about a century later. Even though some of Galileo's calculations were not developed fully, his genius is well reflected, especially since Newton, born in the year of Galileo's death, had yet to formulate the laws of equilibrium and develop the calculus used in the analysis. Industrial revolutions, successive wars, and their machinery requirements assisted and accelerated the growth of strength of materials because of its necessity and usefulness in design. Several textbooks have been written on the subject, beginning with a comprehensive treatment by Timoshenko,[2] first published in 1930, and followed by others: Popov,[3] Hibbeler,[4] Gere and Timoshenko,[5] Beer and Johnston,[6] and Higdon et al.[7] just to mention a few. Therefore, the logic for yet another textbook on this apparently matured subject should be addressed. A cursory discussion of some fundamental concepts is given before answering that question. Strength of materials applies the basic concepts of elasticity, and the mother discipline is analytically rigorous. We begin discussion on a few basic elasticity concepts. A student of strength of materials is not expected to comprehend the underlying equations.

The stress (σ)-strain (ε) relation $\{\sigma\} = [\kappa]\ \{\varepsilon\}$ is a basic elasticity concept. Hooke (a contemporary of Newton) is credited with this relation. The genus of analysis is contained

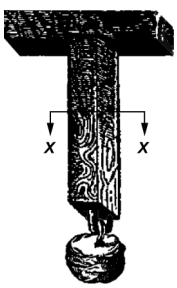

FIGURE P-2 *Member as a strut.*

in the material law. The constraint on stress is the stress formulation, or the equilibrium equation (EE). Likewise, the constraint on strain becomes the strain formulation, or the compatibility condition (CC). The material matrix [κ] along with the stress and strain formulations are required to determine the response in an elastic continuum. Cauchy developed the stress formulation in 1822. This formulation contained two sets of equations: the field equation $\tau_{ij,j} + b_i = 0$ and the boundary condition $p_i = \tau_{ij} n_j$; here $1 \leq i, j \leq 3$; τ_{ij} is the stress; b_i, p_i are the body force and traction, respectively; and $\tau_{ij,j}$ is the differentiation of stress with respect to the coordinate x_j. The strain formulation, developed in 1860, is credited to Saint-Venant. This formulation contained only the field equation. When expressed in terms of strain ε it becomes

$$\left(\frac{\partial^2 \varepsilon_{ij}}{\partial x_k \partial x_l} + \frac{\partial^2 \varepsilon_{kl}}{\partial x_i \partial x_j} - \frac{\partial^2 \varepsilon_{ik}}{\partial x_j \partial x_l} - \frac{\partial^2 \varepsilon_{jl}}{\partial x_i \partial x_k} = 0 \right)$$

Saint-Venant did not formulate the boundary condition, and this formulation remained incomplete for over a century. The missing boundary compatibility condition (BCC) has been recently completed.[*8] The stress and strain formulations required to solve a solid mechanics problem (including elasticity and strength of materials) are depicted in Fig. P-3.

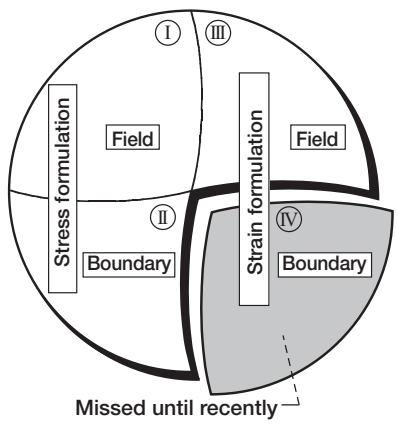

FIGURE P-3 *Stress and strain formulations.*

* Boundary compatibility conditions in stress (here ν is Poisson's ratio):

$$\frac{\partial}{\partial_z}\left\{a_{\nu z}\left(\sigma_y - \nu\sigma_z - \nu\sigma_x\right) - a_{\nu y}(1+\nu)\tau_{yz}\right\} + \frac{\partial}{\partial_y}\left\{a_{\nu y}\left(\sigma_z - \nu\sigma_x - \nu\sigma_y\right) - a_{\nu z}(1+\nu)\tau_{yz}\right\} = 0$$

$$\frac{\partial}{\partial_x}\left\{a_{\nu x}\left(\sigma_z - \nu\sigma_x - \nu\sigma_y\right) - a_{\nu z}(1+\nu)\tau_{zx}\right\} + \frac{\partial}{\partial_z}\left\{a_{\nu z}\left(\sigma_x - \nu\sigma_y - \nu\sigma_z\right) - a_{\nu x}(1+\nu)\tau_{zx}\right\} = 0$$

$$\frac{\partial}{\partial_y}\left\{a_{\nu y}\left(\sigma_x - \nu\sigma_y - \nu\sigma_z\right) - a_{\nu x}(1+\nu)\tau_{xy}\right\} + \frac{\partial}{\partial_x}\left\{a_{\nu x}\left(\sigma_y - \nu\sigma_z - \nu\sigma_x\right) - a_{\nu y}(1+\nu)\tau_{xy}\right\} = 0$$

The discipline of solid mechanics was incomplete with respect to the compatibility condition. In strength of materials the compatibility concept that was developed through redundant force by using fictitious "cuts" and closed "gaps" is quite inconsistent with the strain formulation in elasticity. The solid mechanics discipline, in other words, has acknowledged the existence of the CC. The CC is often showcased, but sparingly used, and has been confused with continuity. It has never been adequately researched or understood. Patnaik et al.[8] have researched and applied the CC in elasticity, discrete analysis, and design optimization. The importance of the compatibility concept cannot be overstated. Without the CC the solid mechanics discipline would degenerate into a few determinate analysis courses that could be covered in elementary mechanics and applied mathematics. The compatibility concept makes solid mechanics a research discipline that is practiced at doctoral and postdoctoral levels in academia and in large research centers throughout the world. The problem of solid mechanics was solved despite the immaturity with respect to the CC. An elasticity solution was obtained by using the information contained in the three-quarter portion of the pie diagram and skillfully improvising the fourth quarter. The fidelity of such a solution depended on the complexity of the problem.[9] Likewise, the strength of materials problem was solved by manipulating the equilibrium equations while bypassing most of the compatibility condition. Airy's beam solution was erroneous because the CC was bypassed. Todhunter's remark is quoted in the footnote.[†]

Strength of Materials

The concepts used to solve strength of materials problems are reviewed next. A simple truss is employed to illustrate the principles. (As it turns out, analysis appears to have begun with a truss problem.)[10] The truss (shown in Fig. P-4) is assembled out of two steel bars with areas A_1 and A_2 and lengths $l\sqrt{2}$ and l. The bars are hinged at nodes 1, 2, and 3. The free node 1 is subjected to a load with components P_x and P_y. It is required to calculate the response consisting of two bar forces F_1 and F_2 and two nodal displacements u and v. The truss is called determinate because the number of force and displacement variables is the same, two. The concepts are described first for determinate analysis and then expanded to indeterminate analysis.

† "Important Addition and Correction. The solution of the problems suggested in the last two Articles were given—as has already been stated—on the authority of a paper by the late Astronomer Royal, published in a report of the British Association. I now observe, however—when the printing of the articles and engraving of the Figures is already completed—that they cannot be accepted as true solutions, inasmuch as they do not satisfy the general equations (164) of § 303 [note that the equations in question are the compatibility conditions]. It is perhaps as well that they should be preserved as a warning to the students against the insidious and comparatively rare error of choosing a solution which satisfies completely all the boundary conditions, without satisfying the fundamental condition of strain [note that the condition in question is the compatibility condition], and which is therefore of course not a solution at all." Todhunter, I. *A History of the Theory of Elasticity and the Strength of Materials*. UK: Cambridge, Cambridge University Press, 1886, 1983.

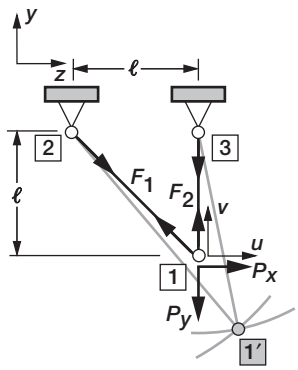

FIGURE P-4 *Determinate truss.*

Determinate Analysis

Sign Convention

Both the load $\{P\}$ and the internal bar force $\{F\}$ are force quantities, yet they follow different sign conventions. The sign convention in strength of materials is more than just the sense of a vector. The additional deformation sign convention[5] has no parallel in elasticity and may not be essential. This textbook follows a unified sign convention, which reduces the burden especially in constructing the bending moment and shear force diagrams in a beam.

Equilibrium Equation (EE)

Force balance yields the equilibrium equation. The two EE of the truss (in matrix notation $[B]\{F\} = \{P\}$) are solved to determine the two bar forces. The treatment of the EE is uniform across all strength of materials textbooks, including this one on unified theory.

Force Deformation Relation (FDR)

Hooke's law is adjusted to obtain the FDR that relates bar deformations β_1 and β_2 to bar forces F_1 and F_2 through the flexibility matrix $[G]$ as $\{\beta\} = [G]\{F\}$. The treatment of FDR is about the same in most textbooks.

Deformation Displacement Relation (DDR)

The DDR, which links bar deformations β_1 and β_2 to nodal displacements $X_1 = u$ and $X_2 = v$, is easily obtained by transposing the equilibrium matrix ($[B]^T$) as $\{\beta\} = [B]^T\{X\}$). Solution of displacement from the DDR requires a trivial calculation because typically $[B]$ is a sparse triangular matrix. The DDR is avoided, neither used nor emphasized, in most standard textbooks. Instead, displacement is calculated either by using a graphical procedure (see Fig. P-4) or by applying an energy theorem. The counterpart of the DDR is the strain displacement relation in elasticity. This key relation finds wide application in elasticity, yet it is not used in strength of materials. Its nonuse can make displacement computation circuitous. The unified theory calculates displacement from the DDR. The treatment of problems

with initial deformations becomes straightforward. Textbooks either avoid or dilute the treatment of initial deformation because of temperature and settling of supports, especially in determinate structures.

Analysis of determinate structure becomes straightforward through a simultaneous application of the three sets of basic equations: equilibrium equation, force deformation relation, and deformation displacement relation.

Indeterminate Analysis

Consider next a three-bar truss obtained by adding the third bar (shown in Fig. P-5) with area A_3 and length $l\sqrt{2}$ to the two-bar truss as depicted in Fig. P-6. The number of displacement variables u and v remained the same (being $m = 2$) between the two trusses, but the number of bar forces F_1, F_2, and F_3 increased to three ($n = 3$) from two. An indeterminate structure is obtained when n is bigger than m and their difference $r = n - m = 1$ represents the degree of indeterminacy, one. The principles discussed for determinate structures are expanded to obtain indeterminate analysis.

Sign Convention

The sign convention is not changed between determinate and indeterminate analysis. The equilibrium concept remains the same. However, the EE matrix $[B]$ is expanded to accommodate the third bar force F_3. It becomes a 2×3 rectangular matrix $[B]$ with two rows and three columns, and it cannot be solved for the three bar forces. A third equation is required: the compatibility condition. The CC in this unified theory is written as $[C][G]\{F\} = \{0\}$, where $[C]$ is the $r \times n$ compatibility matrix. Simultaneous solution of the two EE

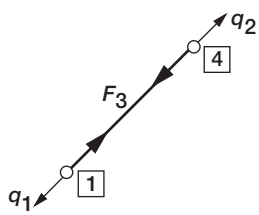

FIGURE P-5 *Force* F_3 *in the third bar.*

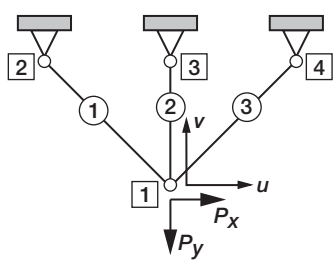

FIGURE P-6 *Indeterminate truss.*

($[B]\{F\} = \{P\}$) and one CC ($[C][G]\{F\} = \{0\}$) yields the force variable. Displacement is back-calculated from the force deformation and the deformation displacement relation. This direct force determination formulation is called the integrated force method (IFM). Such a method was also envisioned by Michell,[‡] and Love's remark is quoted in the footnote.

Compatibility Matrix [*C*]

The matrix $[C]$ is generated from the deformation displacement relation $\{\beta\} = [B]^T\{X\}$. The DDR relates three ($n = 3$) bar deformations β_1, β_2, and β_3 to two ($m = 2$) displacements $X_1 = u$ and $X_2 = v$. Eliminating the two displacements yields one ($r = n - m = 1$) compatibility condition $[C]\{\beta\} = \{0\}$ with the $r \times n$ (here 1×3) coefficient matrix $[C]$. The compatibility generation procedure is analogous to Saint-Venant's strain formulation in elasticity.

Determinate or indeterminate problems of strength of material can be solved by applying four types of equation:

1. Equilibrium equation: $[B]\{F\} = \{P\}$
2. Deformation displacement relation: $\{\beta\} = [B]^{\mathrm{T}}\{X\}$
3. Compatibility condition: $[C]\{\beta\} = \{0\}$
4. Force deformation relation: $\{\beta\} = [G]\{F\}$

For determinate problems the compatibility condition degenerates to an identity $[q] - [q] = [0]$, and it is not required. Using the remaining three sets of equations makes the solution process simple and straightforward. Traditional strength of materials methods employ the equilibrium equations and the force deformation relation but improvise the deformation displacement relation and the compatibility condition. This procedure makes analysis obscure and can degrade solution fidelity especially for complex solid mechanics problems.[9] Strength of materials analysis, despite immaturity with respect to the compatibility condition, progressed but only through two indirect methods: the stiffness method and the redundant force method. In such methods force (the dominating variable in design) is not the primary unknown; it is back-calculated.

Stiffness Method

The stiffness method considers displacement as the primary unknown. For the three-bar truss example, there are two unknown displacements u and v. Two equilibrium equations are available. The two EE, when expressed in terms of the two displacements, yield a set of two stiffness equations $[K]\{X\} = \{P\}$ with a 2×2 symmetrical stiffness matrix $[K]$. Solution of the stiffness equations yields the two displacements, from which the bar forces $\{F\}$ can be

‡ "It is possible by taking account of these relations [the compatibility conditions] to obtain a complete system of equations which must be satisfied by stress components, and thus the way is open for a direct determination of stress without the intermediate steps of forming and solving differential equations to determine the components of displacements." Love, A. E. H. *A Treatise on the Mathematical Theory of Elasticity*. UK: Cambridge, Cambridge University Press, 1927.

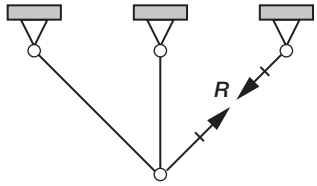

FIGURE P-7 *Redundant force* R.

back-calculated. Generalization of this procedure, which is credited to Navier, became the popular displacement, or stiffness, method.

Redundant Force Method

The redundant force method considers redundant force as the primary unknown. For example, one bar of the three-bar truss is "cut" to obtain an auxiliary two-bar determinate truss as shown in Fig. P-7. Determinate analysis yields the displacement Δ^P at the cut because of the applied load. The solution process is repeated for a fictitious load R, referred to as the redundant force, in place of the third bar; and the displacement Δ^R at the cut is obtained in terms of the redundant force R. Because the physical truss has no real cut, the "gap" is closed ($\Delta^P + \Delta^R = 0$), and this yields the value of the redundant force. The solution for the indeterminate three-bar truss is obtained as the response of the determinate structure subjected to two loads: the given external load P and a known redundant force R. Generalization of the procedure became the redundant force method, which was popular at the dawn of computer-automated analysis. Currently, for all practical purposes the redundant force method has disappeared because it was cumbersome and had limited scope. This method can be derived from the integrated force method (IFM) with some assumptions.

Other Methods

Two other methods have also been formulated: the hybrid method and the total formulation. The hybrid method considers force and displacement as the simultaneous unknowns. The total formulation considers force, displacement, and deformation as the primary variables. For the sake of completeness the analysis methods are listed in Table P-1. A formulation can also be derived from a variational functional listed in the last column. An undergraduate student is not expected to comprehend all the information contained in Table P-1. For a strength of materials problem the calculation of the primary variable, such as force in IFM (or displacement in the stiffness method), may consume the bulk of the calculation. Back-calculation of other variables from the primary unknown requires a small fraction of the computational effort. Therefore, the force method (or IFM) and the displacement (or stiffness) method are the two popular methods of analysis. The hybrid method and the total formulation may not be efficient and are seldom used.

The impact of a less mature state of development of the compatibility condition is sketched in Fig. P-8. The compatibility barrier blocked the natural growth of the force

TABLE P-1 Methods of Solid Mechanics with Associated Variational Functionals

Method Number	*Method*		*Primary Variables*		*Variational Functional*
	Elasticity	*Strength of Materials*	*Elasticity*	*Strength of Materials*	
1	Completed Beltrami-Michell formulation (CBMF)	Integrated force method (IFM)	Stress	Force	IFM variational functional
2	Airy formulation	Redundant force method	Stress function	Redundant force	Complementary energy
3	Navier formulation	Stiffness method	Displacement	Displacement or deflection	Potential energy
4	Hybrid method	Reissner method	Stress and displacement	Force and deflection	Reissner functional
5	Total formulation	Washizu method	Stresses, strains, and displacements	Force, deformation, and deflection	Washizu functional

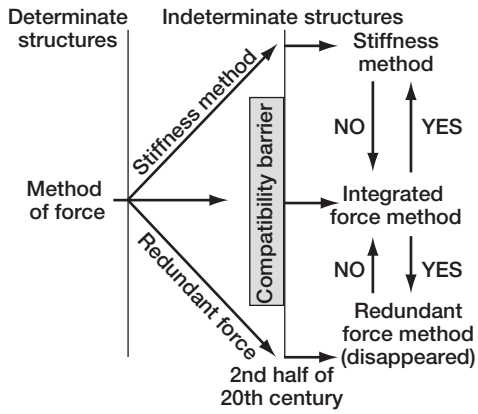

FIGURE P-8 *Compatibility barrier prevented extension of force method for indeterminate structures.*

method for the indeterminate problem. The analysis course split into the stiffness method and the redundant force method. The IFM can be specialized to obtain the two indirect methods, but the reverse course cannot be followed. The augmentation of the compatibility condition facilitates easy movement between the strength of materials variables: from displacement to deformation, from force to deformation, and from force to displacement, as well as from IFM to other methods of analysis.

Unified Theory of Strength of Materials

We return to the logic for this textbook. The compatibility condition is required for analysis, but analysis could not benefit from the CC because it was not fully understood. Now we understand the compatibility condition and use the CC to solve strength of materials problems. The use of the CC has systematized analysis. This textbook, by combining the new compatibility concept with the existing theory, has unified the strength of materials theory. For determinate structures the calculation of displacement becomes straightforward. A new direction is given for the analysis of indeterminate structures. Treatment of initial deformation by the IFM is straightforward because it is a natural parameter of the compatibility condition: as load is to equilibrium, so initial deformation is to compatibility. Learning IFM will expose the student to almost all strength of materials concepts because the direct force determination formulation uses them all. The student must learn the stiffness method and should be able to solve simple problems by using the redundant force method. This textbook provides for all three methods and traditional techniques.

This textbook does not duplicate any existing textbook. The first chapter introduces the subject. Chapters 2 through 5 treat determinate structures: truss, beam, shaft, and frame. Chapters 6 through 9 are devoted to indeterminate structures: truss, beam, shaft, and frame. Two-dimensional stress analysis is the subject matter of Chapter 10. Column buckling and energy theorems are given in Chapters 11 and 12, respectively. Chapter 13 introduces the

finite element method. Special topics, including Navier's table problem, are discussed in the last chapter. Appendixes 1 through 6 discuss matrix algebra, properties of plane area, systems of units, sign convention, properties of materials, and strength of materials formulas, respectively. Appendix 7 introduces the reader to the computer code for solving strength of materials problems by using various methods of analysis. The FORTRAN code supplied with the solution manual of the textbook is also available at the website http://www.patnaik-ue.org/ifm/. The last appendix lists the answers to the problems.

The textbook covers standard topics of strength of materials. Both SI (International System of Units) and USCS (U.S. Customary Systems) system of units are employed. The treatment of the material is suitable for sophomore and junior engineering students. The book includes more material than can be covered in a single course. The teacher may choose to select topics for a single course; for example emphasizing fundamental concepts while reducing rigor on theoretical aspects. Alternatively, determinate analysis (first five chapters) along with principal stress calculation in Chapter 10 and column buckling in Chapter 11 can be covered in a first course in the sophomore year. Indeterminate analysis can be covered as a sequel in the junior year. Freshmen graduate students can benefit from the advanced materials included in the book. It is written to serve as a standard textbook in the engineering curriculum as well as a permanent professional reference.

It is impossible to acknowledge everyone who has contributed to this book. We express gratitude to them. A major debt is owed to our two NASA (Glenn Research Center) colleagues: James D. Guptill and Rula M. Coroneos.

Historical Sketch

Some of the scientists who contributed to the strength of materials are listed in Fig. P-9. The subject was developed over centuries, beginning with Leonardo da Vinci, circa 1400s, to the present time. Leonardo, born a century before Galileo, understood the behavior of machine components and the work principle. Galileo Galilei began mechanics and material science and describes them in his book *Dialogues Concerning Two New Sciences*.[1] Robert Hooke, a contemporary of Newton, conducted tests on elastic bodies and is credited with the material law. Isaac Newton has given us the laws of motion. The Bernoulli brothers (Jacob and Johan) have contributed to virtual displacement and the elastic curve for a beam. Leonhard Euler is credited with the beam elastic curve and the nonlinear coordinate system. Charles-Augustin de Coulomb made contributions to torsion and beam problems. Joseph-Louis Lagrange formulated the principle of virtual work. Simeon-Denis Poisson has given us Poisson's ratio. Claude Louis Marie Henri Navier is credited with the displacement method. Jean Victor Poncelet is acknowledged for vibration of a bar due to impact load. Thomas Young introduced the notion of modulus of elasticity. Augustin Cauchy is credited with the stress formulation.

August Ferdinand Möbius contributed to the analysis of determinate truss. Gabrio Piola is acknowledged for analysis of the stress tensor. Felix Savart conducted acoustic experiments. Charles Greene contributed to the graphical analysis of bridge trusses. Gabriel Lame concluded the requirement of two elastic constants for an isotropic material. Jean-Marie Duhamel contributed to vibration of strings. Adhémar Jean Claude Barré de Saint-Venant is credited with the strain formulation. Franz Neumann contributed to photoelastic stress

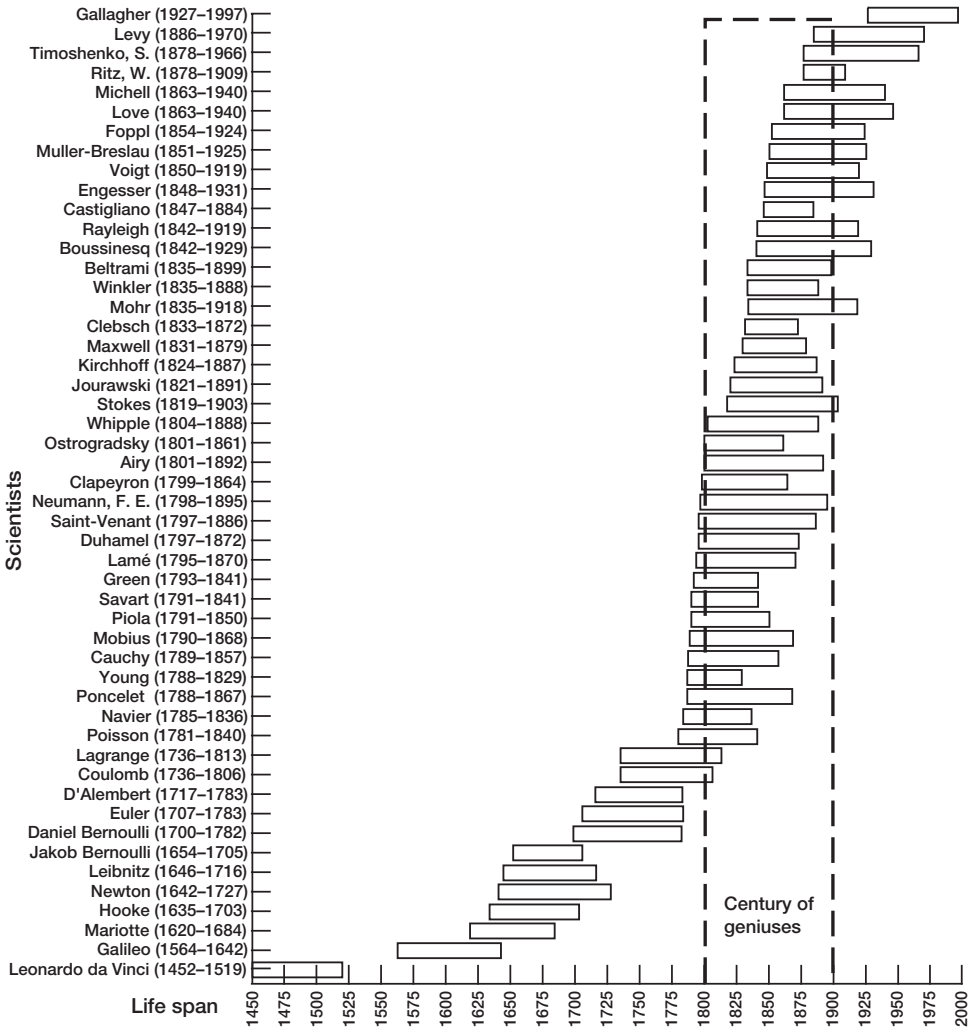

FIGURE P-9 *Scientists who contributed to strength of materials.*

analysis. Émile Clapeyron is credited with a strain energy theorem. George Biddel Airy introduced the stress function in elasticity. Mikhail Vasilievich Ostrogradsky is known for his work in variational calculus. Squire Whipple was the first to publish a book on truss analysis.[10] George Gabriel Stokes is recognized for his work in hydrodynamics. Dimitrii Ivanovich Zhuravskii, also known by D. J. Jourawski, developed an approximate theory for shear stress in beams. Gustav Robert Kirchhoff is credited with the theory of plates. James Clerk Maxwell completely developed photoelasticity. Alfred Clebsch calculated beam deflection by integrating across points of discontinuities. Otto Mohr is credited with the graphical representation of stress. Emile Winkler is recognized for the theory of bending of

curved bars. Eugenio Beltrami contributed to the Beltrami-Michell stress formulation. Joseph Boussinesq calculated the distribution of pressure in a medium located under a body resting on a plane surface. Lord Rayleigh formulated a reciprocal theorem for a vibrating system. Alberto Castigliano's contribution included the two widely used strain energy theorems.

Friedrich Engesser made important contributions to buckling and the energy method. Woldemar Voigt settled the controversy over the raiconstant and multiconstant theories. H. Muller-Breslau developed a method for drawing influence lines by applying unit load. August Foopl contributed to space structures. The outstanding elastician Augustus Edward Hough Love is credited with discovering earthquake waves, referred to as Love-waves. John Henry Michell showed that the stress distribution is independent of the elastic constants of an isotropic plate if body forces are absent and the boundary is simply connected. Walter Ritz developed a powerful method for solving elasticity problems. Stephen Prokofyevich Timoshenko[11] revolutionized the teaching of solid mechanics through his 12 textbooks. Maurice Levy calculated stress distribution in elasticity problems. Richard H. Gallagher made outstanding contributions to finite element analysis.

References

1. Galilei, G. *Dialogues Concerning Two New Sciences*. Evanston, IL: Northern University Press, 1950.
2. Timoshenko, S. P. *Strength of Materials*. New York: D. Van Nostrand Company, 1930.
3. Popov, E. P. *Engineering Mechanics of Solids*. Englewood Cliffs, NJ: Prentice-Hall, 1999.
4. Hibbeler, R. C. *Mechanics of Materials*. Englewood Cliffs, NJ: Prentice-Hall, 2000.
5. Gere, J. M., and Timoshenko, S. P. *Mechanics of Materials*, MA: PWS Engineering, Massachusetts, 2000.
6. Beer, P. F., and Johnston, E. R. *Mechanics of Materials*. New York: McGraw-Hill, 1979.
7. Higdon, A., Ohlsen, E. H., Stiles, W. B., Weese, J. A., and Riley, W. F. *Mechanics of Materials*. New York: John Wiley & Sons, 1985.
8. Patnaik, S. N. "The Variational Energy Formulation for the Integrated Force Method." *AIAA Journal*, 1986, Vol. 24, pp 129–137.
9. Hopkins, D., Halford, G., Coroneos R., and Patnaik, S. N. "Fidelity of the Integrated Force Method," Letter to the Editor. *Int. J. Numerical Methods in Eng.*, 2002.
10. Whipple, S. "An Essay on Bridge Building," Utica, NY, 1847, 2nd ed. "An elementary and practical treatise on bridge building" New York, Van Nostrand, 1899.
11. Timoshenko, S. P. *History of Strength of Materials*, New York, McGraw-Hill Book Co., 1953.

1 Introduction

Strength of materials is a branch of the major discipline of solid mechanics. This subject is concerned with the calculation of the response of a structure that is subjected to external load. A structure's response is the stress, strain, displacement, and related induced variables. External load encompasses the mechanical load, the thermal load, and the load that is induced because of the movement of the structure's foundation. The response parameters are utilized to design buildings, bridges, powerplants, automobiles, trains, ships, submarines, airplanes, helicopters, rockets, satellites, machinery, and other structures. A beam, for example, is designed to ensure that the induced stress is within the capacity of its material. Thereby, its breakage or failure is avoided. Likewise, the magnitude of compressive stress in a column must be controlled to prevent its buckling. Excessive displacement can crack a windowpane in a building or degrade the performance of a bridge. The magnitude and direction of displacement must be controlled in the design of an antenna to track a signal from a satellite. Displacement also plays an important role in calculating load to design airborne and spaceborne vehicles, like aircraft and rockets. Strain is important because the failure of a material is a function of this variable.

Response calculation, a primary objective of the solid mechanics discipline, is addressed at three different levels: elasticity, theory of structures, and strength of materials. If the analysis levels are arranged along a spectrum, elasticity occupies the upper spectrum. Strength of materials, the subject matter of this book, belongs to the bottom strata. The theory of structures is positioned at the middle. The fidelity of response improves as we move from the lower to the upper spectrum methods, but at a cost of increased mathematical complexity. For example, calculating an elasticity solution to a simple beam problem can be quite difficult. In contrast, the strength of materials ballpark solution is easily obtained. This solution can be used in preliminary design calculations. Quite often the strength of materials result is considered as the benchmark solution against which answers obtained from advanced methods are compared. The upper spectrum methods have not reduced the

importance of strength of materials, the origin of which has been traced back to Galileo, who died in 1642 on the day Newton was born. An understanding of the strength of materials concepts will benefit an engineer irrespective of the field of specialization. It is, therefore, a common core course in almost all engineering disciplines. This course, in a simplified form, will expose students to the fundamental concepts of solid mechanics. Comprehension of other solid mechanics subjects can be challenging if the student is not well versed in this course because strength of materials principles lay the foundation for other advanced courses.

This chapter introduces the vocabulary, parameters, units of measurement, sign convention, and some concepts of strength of materials. If enburdened, a reader may skip sections of this chapter and proceed to the subsequent chapter. It is recommended, however, that the reader revisits this chapter until he or she has a complete comprehension of the material.

The parameters and variables of strength of materials problems separate into two distinct categories. The first group pertains to the information required to formulate a problem, such as the configuration of the structure, the member properties, the material characteristics, and the applied loads. This group we will refer to as parameters, which become the input data when the problem is solved in a computer. These parameters must be specified prior to the commencement of calculations. The response of the structure, such as the stress, strain, and displacement determined from the strength of materials calculation, forms the second group. We will call these the response variables that constitute the output data when the problem is solved in a computer. The important variables, keywords, and concepts discussed in this chapter are listed in Table 1-1. A description of the keywords cannot be given in the sequence shown in Table 1-1 because they are interrelated. For example, we have to discuss stress and strain, which belong to the response category, prior to describing other material parameters.

Structures and Members

Structures are made of a few standard members, also referred to as elements. Our analysis is confined primarily to bar, beam, shaft, and frame members, and the structures that can be made of these elements. The structure types discussed in this book are

1. *A truss structure or simply a truss:* It is made of bar members. The truss shown in Fig. 1-1*a* is made of four bar members and four joints, also called nodes. It is subjected to load P_1 at node 2 along the x-coordinate direction and to load P_2 at node 3 along the negative y-direction.

TABLE 1-1 Key Words in Strength of Materials

Structure (Member)	*Parameters (Input Data)*	*Response Variables*	*Concepts*	*Others*
Truss (bar)	Member property	Internal force	Equilibrium	Measurement unit
Beam (beam)	Load	Stress	Determinate	Sign convention
Shaft (shaft)	Material characteristic	Displacement	Indeterminate	
Frame (frame)		Deformation		
Shell		Strain		

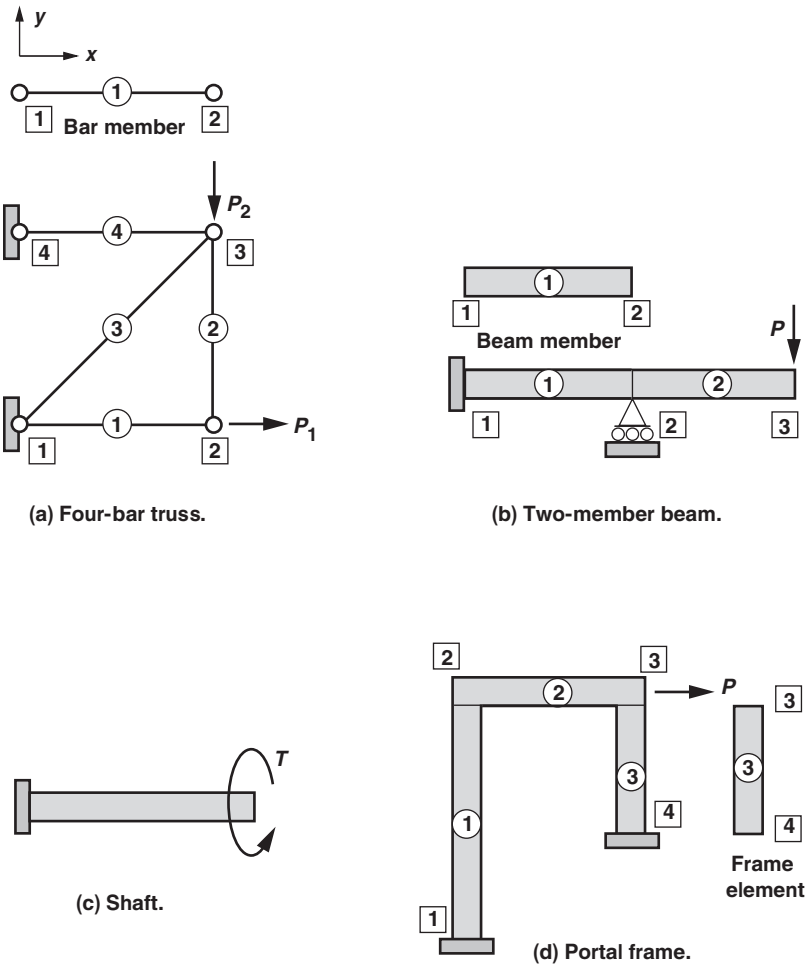

FIGURE 1-1 *Structures and members.*

2. *Beam:* Simple and continuous beams are made of beam members. The beam shown in Fig. 1-1*b* has two members and three nodes. It supports load P at node 3 along the negative y-direction.
3. *Shaft:* Torsional shafts are made of shaft members. A shaft subjected to a torque T is shown in Fig. 1-1*c*.
4. *Frame:* Frame structures are made of frame members. A frame element combines the action of a bar and a beam member. The portal frame shown in Fig. 1-1*d* has three members and four nodes. It is subjected to load P along the x-coordinate direction at node 3.
5. *Shell:* An elementary treatment of simple shells is also included.

1.1 Systems of Units

Measurement of the parameters and variables requires the adoption of a system of units. There are two popular systems: the International System of Units (SI) and the U.S. Customary System (USCS). This book uses both SI and USCS systems. Both systems have several base units from which all other units are derived.

In the USCS, the base units of importance are pound-force (lbf), foot (ft), second (s), Fahrenheit (°F), and degree (°). Pound-force is the unit of force; for example, a man can easily apply a 100-lbf while pushing a stalled car. A foot is the unit of length: the height of a person can be 6 ft. A second is the unit of time in both the USCS and SI systems: a tiger can leap 70 ft in 1 s. A degree Fahrenheit is the unit of temperature: the outside temperature is 70°F. A degree is the unit to measure angles: a right angle is equal to 90°.

The base units in the SI system are kilogram (kg), meter (m), second (s), kelvin (K), and radian (rad). The kilogram is the unit of mass: the mass of a beam is 25 kg. The meter is the unit of length: the height of a person can be 1.83 m. The second is the unit of time: a tiger can leap 21.35 m in 1 s. Kelvin is the unit of temperature, an alternate unit being degree Celsius (°C). The two temperature scales differ by the absolute zero temperature, which is set at −273.15°C; [t(°C) = t(K) − 273.15]. We will use the Celsius scale. The outside temperature is 21°C or 294.15 K. The radian is the unit to measure angles: a right angle is 1.571 rad.

The dimensions of a quantity can be expressed in terms of the base units of mass M, length L, time T, temperature t, and angle θ. Take, for example, force F. The dimension of force, which is the product of mass and acceleration, can be derived as

$$
\begin{aligned}
F &= \text{mass} \times \text{acceleration} \\
&= M \times (\text{acceleration} = \text{time rate of change of velocity}) \\
&= M \times (\text{velocity/time}) = MT^{-1} \times (\text{time rate of change of distance}) \\
&= MT^{-1}\ (\text{distance/time}) \\
&= MLT^{-1} \times LT^{-1} = MLT^{-2} \\
F &= MLT^{-2}
\end{aligned}
$$

The dimension of force is: mass × length ÷ time squared, or MLT^{-2}. Table 1-2 provides the dimensions of a few quantities along with the factor to convert from USCS to SI units and vice versa.

EXAMPLE 1-1

The cantilevered beam shown in Fig. 1-2 is 30 ft long, 2 ft deep, and 6 in. thick. It is made of steel with a mass density of 15.2 slug/ft^3. It supports a 1000-lbf load at a 30° inclination to the vertical in the x–y plane. The temperature of the beam varies linearly

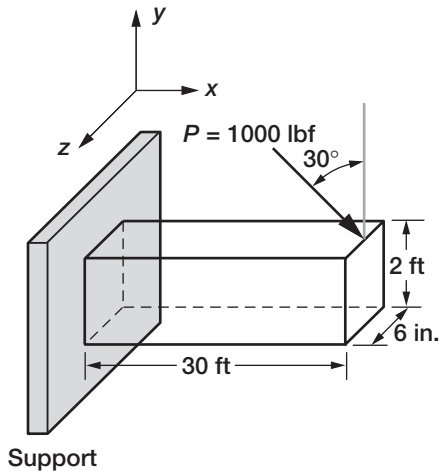

FIGURE 1-2 *Cantilever beam.*

from 250°F at the support to 70°F at its free end. Calculate its mass and weight, and convert the parameters into SI units.

Solution

Length: $\ell = 30\,\text{ft} = 30 \times 12 = 360\,\text{in.}$

$\ell = 30 \times 0.305 = 9.15\,\text{m} = 915\,\text{cm}$

Depth: $d = 2\,\text{ft} = 24\,\text{in.}$

$d = 2 \times 0.305 = 0.61\,\text{m} = 61\,\text{cm}$

Thickness: $t = 6\,\text{in.} = 0.5\,\text{ft}$

$t = 0.5 \times 0.305 = 0.152\,\text{m} = 15.24\,\text{cm}$

Volume: $V = \ell dt = 30 \times 2 \times 1/2 = 30\,\text{ft}^3 = 30\,\text{cft}$

$V = 30 \times 12^3 = 51.84 \times 10^3\,\text{in.}^3$

$V = 9.15 \times 0.61 \times 0.152 = 0.85\,\text{m}^3 = 850.0 \times 10^3\,\text{cm}^3$

Mass density in USCS units can be measured either in slug per cubic foot or pound mass (lbm) per cubic foot.

$$1\,\text{slug} = \frac{1\,\text{lbf}}{1\,\text{ft/s}^2}$$

$$1\,\text{lbm} = 1\,\text{lbf/g} = \frac{1\,\text{lbf}}{32.17\,\text{ft/s}^2}$$

$$1\,\text{lbf} = 1\,\text{slug ft/s}^2 = 32.17\,\text{lbm ft/s}^2$$
$$1\,\text{slug} = 32.17\,\text{lbm}$$

Mass Density of Steel: $\rho_m = 15.2\,\text{slug/ft}^3 = 489\,\text{lbm/ft}^3$

$$\rho_m = \frac{15.2 \times 14.59}{2.832 \times 10^{-2}} = 7831\,\text{kg/m}^3$$

Mass: $m = V\rho_m = 30 \times 15.2 = 456\,\text{slug} = 14{,}669.52\,\text{lbm}$

$$m = 0.85 \times 7831 = 6656\,\text{kg}$$

Weight density is equal to the product of the mass density and the gravity acceleration ($\rho_w = \rho_m$ G)

$$\rho_w = 15.2 \times 32.17 = 489\,\text{lbf/ft}^3$$
$$\rho_w = 7831 \times 9.81 = 76{,}822\,\text{N/m}^3 = 76.8\,\text{kN/m}^3$$

Weight: $W = V\rho_w = 30 \times 489 = 14{,}670\,\text{lbf}$

$$W = 0.85 \times 76.8 = 65.3\,\text{kN}$$
$$1\,\text{N} = 14{,}670/65.3 \times 10^3 = 0.2248\,\text{lbf}$$

Load: $P = 1000\,\text{lbf} = 1\,\text{kip} = 4.45\,\text{kN}$

Angle: $\theta = 30^\circ = 0.524\,\text{rad}$

Axial Load: $P_x = P\sin(30) = P/2$

Shear Load: $P_y = -P\cos(30) = -\dfrac{\sqrt{3}P}{2}$

$$P_x = 500\,\text{lbf} = 0.5\,\text{kip} = 2.22\,\text{kN}$$
$$P_y = -866\,\text{lbf} = -0.866\,\text{kip} = -3.85\,\text{kN}$$

Temperature:

At support: $T_s = 250^\circ\text{F}$

$$T_s = 5/9\ (250 - 32) = 121.1^\circ\text{C}$$
$$T_s = 121.1 + 273.15 = 394.25\,\text{K}$$

At free end: $T_s = 70^\circ\text{F} = 21.1^\circ\text{C} = 294.25\,\text{K}$

The problem stated in SI units: The cantilevered beam shown in Fig. 1-2 is 9.15 m long, 0.61 m deep, and 0.152 m thick. It is made of steel with a mass density of 7831 kg/m^3. It supports a 4.45-kN load at a 0.524 rad inclination to the vertical in the *x–y* plane. The temperature of the beam varies linearly from 121.1°C at the support to 21.1°C at its free end.

1.2 Response Variables

Internal force, stress, displacement, deformation, and strain are the response variables of a strength of materials problem. A brief description is given for each variable. The discussion is confined to the two-dimensional plane because this course addresses planar structures. The concepts, however, are easily extended into the third dimension.

Force

Force is a vector quantity and it has the dimension of $F = MLT^{-2}$ (see Table 1-2). It is defined by its magnitude, line of action, sense (positive or negative), and location. Its magnitude cannot be measured directly, but it can be experienced, for example, through the muscular effort required to push a stalled car. In USCS units, it is measured in units of pound-force (lbf). In engineering, force is often measured in units of 1000 lbf, which is 1 kilopound-force or kip (1 kip = 1000 lbf). In SI units, it is measured in newton (N). It can also be measured in units of kilogram-force (kgf), which is equal to 9.807 newton (1 kgf = 9.807 N). Conversions between the two systems of measurement for force, which is accurate for strength of material calculations, are given in Table 1-3. A newton, at about 1/10 kgf or less than 1/4 lbf, is a small force. The weight of a small apple is about one newton. Four apples weight about one pound force. A convenient SI unit to measure force is a metric ton (MT, which is 1000 kgf) or in units of kilonewton (1 kN = 1000 N).

A force P is applied to a beam as shown in Fig. 1-3*a*. Its point of application is the location B. The force is represented by a line with a single arrowhead. Its line of action is along the line *b–b* that contains the force. Its x and y components are P_x and P_y. These are obtained by projecting the force vector P into x- and y-coordinate axes.

$$F = P_x = P\cos(\theta) \tag{1-1a}$$

$$V = -P_y = -P\cos(90 - \theta) = -P\sin(\theta) \tag{1-1b}$$

The included angle θ is between the line AC and the line of action *b–b*. The magnitude of force is calculated as the sum of the squares of the components.

$$P = \sqrt{\left(P_x^2 + P_y^2\right)} \tag{1-1c}$$

Strength of materials calculations emphasize the components. The component along the x-coordinate axis is called the axial force or normal force ($F = P_x$). Likewise, the component along the y-coordinate axis is called the shear force or transverse force ($V = -P_y$). The response of the beam subjected to force P is identical to the response obtained when P is replaced by the axial force and the shear force, as shown in Fig. 1-3*b*.

Traditionally, the x-coordinate axis of the beam—also called its structural axis—is chosen along its length as shown in Fig. 1-4*a*, and y and z are the orthogonal coordinate axes. The

TABLE 1-2 SI and USCS Units

Quantity	*Dimension*	*International System (SI)*	*U.S. Customary System (USCS)*	*Conversion factor*	
				SI to USCS	*USCS to SI*
Mass	M	Kilogram[a] (kg)	Slug	6.852×10^{-2} slug/kg	14.59 kg/slug
Length	L	Meter[a] (m) = 100 centimeters (cm)	Foot[a] (ft) = 12 inches (in.)	3.281 ft/m	0.3048 m/ft
Time	T	Second[a] (s)	Second[a] (s)	1	1
Temperature	t	Celsius[a] (°C)	Fahrenheit[a] (°F)	t°F = (9/5)t°C + 32	t°C = (5/9)(t°F − 32)
Angle	θ	Radian[a] (rad)	Degree[a] (°)	57.31 deg/rad	1.745×10^{-2} rad/deg
Force	$F = MLT^{-2}$	Newton (N)	Pound-force[a] (lbf)	0.2248 lbf/N	4.448 N/lbf
Area	$A = L^2$	Square meter (m^2)	ft^2	10.76 ft^2/m^2	9.29×10^{-2} m^2/ft^2
Volume (solid)	$V = L^3$	Cubic meter (m^3)	ft^3	35.31 ft^3/m^3	2.832×10^{-2} m^3/ft^3
Gravity acceleration	$g = LT^{-2}$	9.81 m/s^2	32.17 ft/s^2	(3.281 ft/s^2)/(m/s^2)	(0.3048 m/s^2)/(ft/s^2)
Pressure	$p = ML^{-1}T^{-2}$	Pascal (Pa) = N/m^2	lbf per square inch (psi)	1.45×10^{-4} psi/Pa	6895 Pa/psi

[a]Base unit.

TABLE 1-3 Conversion between USCS and SI Units

Variable	*USCS to SI*	*SI to USCS*
Length	1 in. = 2.54 cm	1 cm = 0.3937 in.
	1 ft = 12 in. = 30.48 cm = 0.3048 m	1 m = 100 cm = 3.28 ft = 39.37 in.
	1 yd = 3 ft = 0.9144 m	1 m = 1.094 yd
Force	1 lbf = 4.448 N = 0.4535 kgf	1 N = 0.225 lbf = 0.1020 kgf
	1 kip = 1000 lbf = 4448 N	1 kgf = 9.807 N = 2.205 lbf
	1 kip = 453.5 kgf = 0.4535 MT	1 MT = 1000 kgf = 2.205 kip
Moment, torque, energy, or work	1 ft-lbf = 1.3558 N-m = 13.83 kgf-cm	1 N-m = 0.738 ft-lbf
	1 in.-k = 112.98 N-m	1 kgf-cm = 0.0981 N-m = 0.0723 ft-lbf
Stress or pressure	1 psi = 1 lbf/in.^{2} = 6895 Pa	1 Pa = 1 N/m^2 = 0.145×10^{-3} psi = 145 mpsi (mpsi = millipsi = 10^{-3} psi)
	1 ksi = 1000 psi = 6.895×10^6 Pa = 6.895 MPa	1 Mpa = 145.5 psi = 0.145 ksi

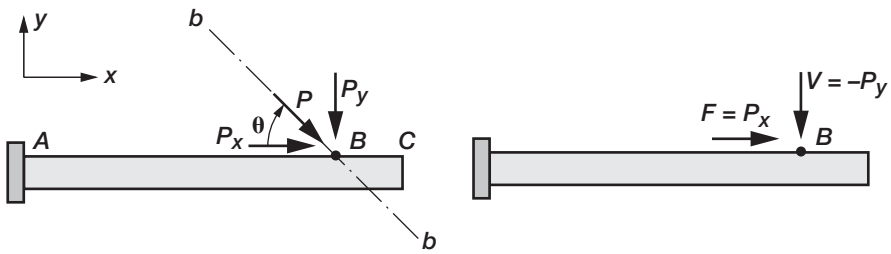

(a) Force P is applied.

(b) Components P_x and P_y are applied.

FIGURE 1-3 *Axial force* F *and shear force* V.

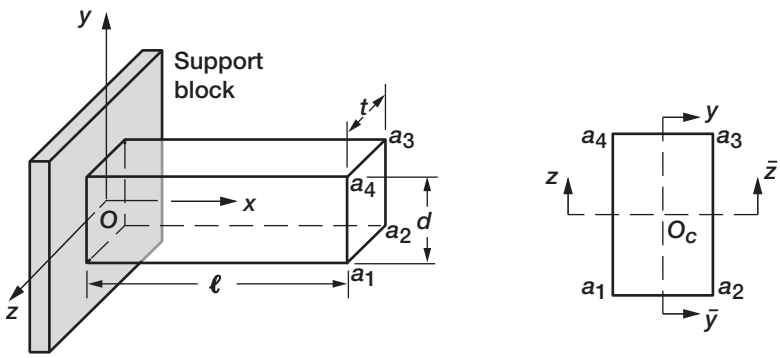

(a) Cantilever beam.

(b) Cross-section at a_1–a_2–a_3–a_4.

FIGURE 1-4 *Dimensions of a beam.*

origin of the coordinate system at point O lies in the support block. The dimensions of the beam are its length ℓ along the x-coordinate axis, depth d, and thickness (or width) t measured along the y- and z-coordinate axes, respectively. The beam has a uniform rectangular cross-section ($a_1-a_2-a_3-a_4$) that is parallel to the y–z plane, and it is symmetrical about both the y- and z-axes as shown in Fig. 1-4b. Symmetry about the y- and z-axes is marked as $y-\bar{y}$ and $z-\bar{z}$, respectively. The centroid of the cross-section (O_c) is the intersection of the axes of symmetry. The origin of the coordinate system O is the projection of O_c onto the support block.

Axial Force

An axial force F acts along the x-coordinate axis, which is also the structural axis. For the purpose of analysis, it is assumed that the axial force is applied along the centerline passing through the centroid of the beam cross-section marked O_c in Fig. 1-5a. An axial force F^e applied at an off-center eccentric location E, with eccentricities e_y and e_z, is not admissible.

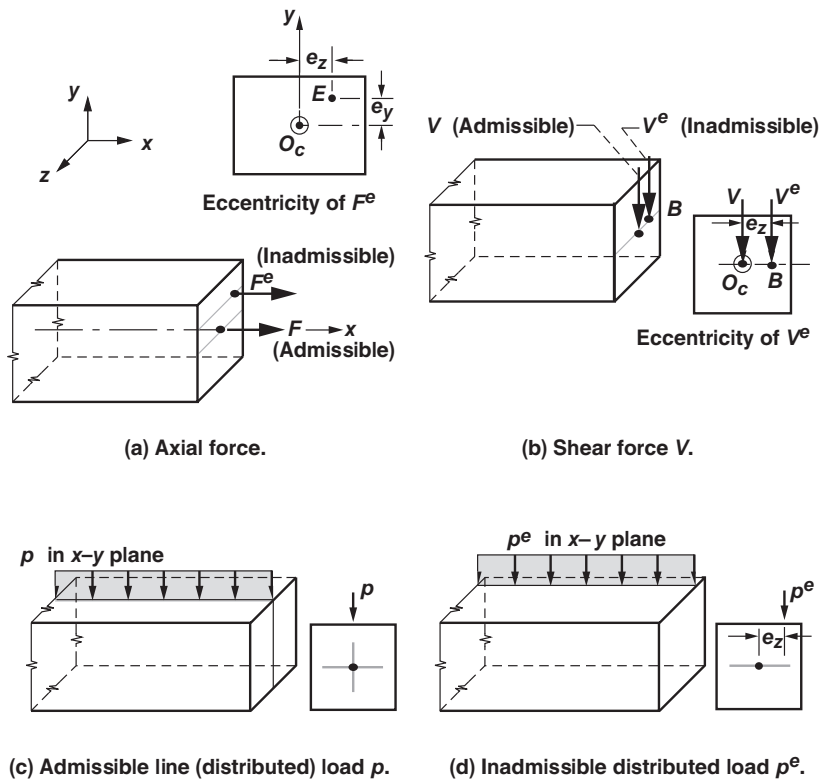

FIGURE 1-5 *Line of action of axial force and shear force.*

Shear Force

A shear force V is the transverse force. The y-coordinate axis is its line of action. Shear force V passes through the centroid marked O_c as shown in Fig. 1-5*b*. An eccentric shear force V^e applied at B with an eccentric e_z as shown in Fig. 1-5*b* is not admissible. Distributed transverse load p along a line can be applied in the x–y plane as shown in Fig. 1-5*c*. The distributed load p^e is not admissible because it is applied with an eccentricity e_z (see Fig. 1-5*d*).

Bending Moment

Bending moment is the product of shear force V and a distance ℓ measured along the beam x-coordinate axis ($M = V\ell$). It is applied in the x–y plane and directed along the z-coordinate axis, which represents its line of action. A positive moment can be shown by a semicircle with an arrowhead oriented along the counterclockwise direction, or alternately by a double-headed arrow directed along the z-coordinate axis. The bending moment M, shown in Fig. 1-6*a*, is an admissible moment. The moment M^e shown in Fig. 1-6*b* is not admissible because it has an eccentricity e_z, even though it lies in a parallel x–y plane.

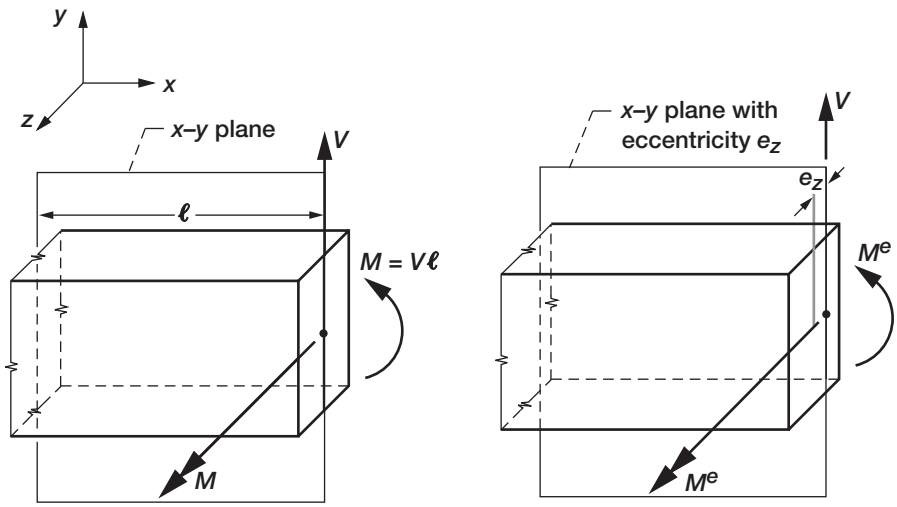

(a) Admissible moment M in x–y plane.

(b) Inadmissible moment M^e in eccentric x–y plane.

FIGURE 1-6 *Bending moment in x–y plane.*

Torque

A torque (T) is also a moment, but its line of action is along the beam length or the x-coordinate axis, and it lies in the y–z plane. A positive torque can be shown by a semicircle with an arrowhead oriented along the counterclockwise direction in the y–z plane. A double-headed arrow directed along the x-coordinate axis can also show its line of action. The torque T shown in Fig. 1-7 is admissible because it lies in the y–z plane and its line of action coincides with the x-coordinate axis. The torque T^e is not admissible because its direction has an eccentricity e, even though it lies in the y–z plane. Both bending moment and torque have the dimension of force times distance, or $T = F\ell = ML^2T^{-2}$.

Length in the USCS system is measured in feet. In SI units, it is measured in meters. Moment or torque in USCS units can be measured in foot pound-force (ft-lbf) or inch-kip (in.-k). In SI units, it can be measured in newton meters (N-m) or kilogram-force-centimeters (kgf-cm). Conversion between the two systems is given in Table 1-3.

Force Eccentricity and Approximation

A beam is a slender structural member. The slenderness ratio SR is defined as the ratio of beam length ℓ to its cross-sectional area A ($SR = \ell/A$). The slenderness ratio of a typical beam exceeds 20 ($SR = \ell/A \geq 20$); that is, the length is at least 20 times greater than its cross-sectional area. Force eccentricity, which is associated with the dimensions of the area, induces a small error in the results because a beam has a high slenderness ratio.

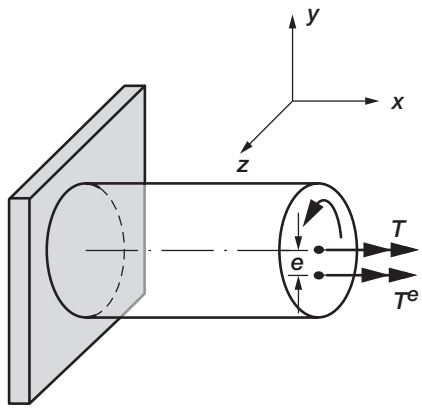

FIGURE 1-7 *Torque T on a circular shaft.*

Eccentricity of force can be accommodated through an equivalence concept that replaces the original force by axial force, shear force, bending moment, and torque. This concept is illustrated for an eccentrically applied axial force F^e shown in Fig. 1–8. The axial force F^e with eccentricity e_y and e_z with respect to the y- and z-coordinate axes, respectively, can be replaced by an equivalent set of forces consisting of an axial force F^a, and two bending moments (M^y and M^z). The force F^a is equal to the applied force. The eccentricity e_y

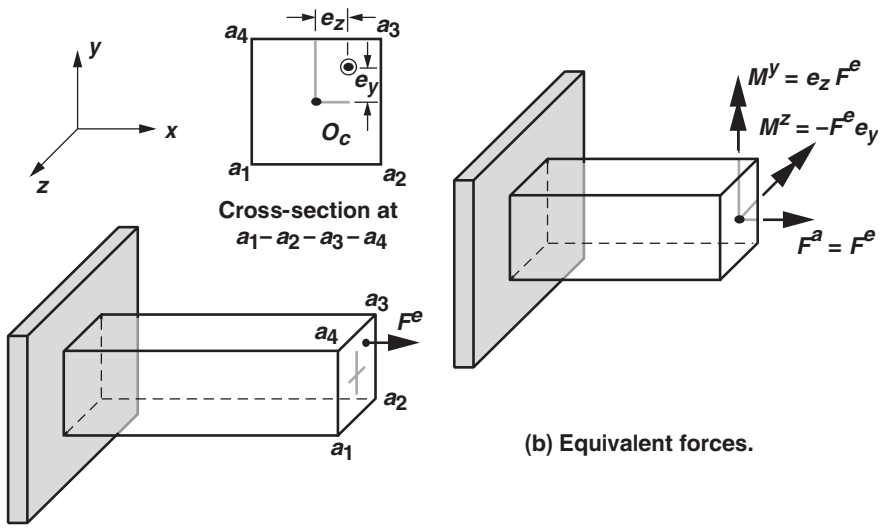

(a) Eccentrically applied axial force F^e.

FIGURE 1-8 *Equivalence concept for axial force.*

produces the moment M^z, which is directed along the negative z-coordinate axis. Likewise, the eccentricity e_x produces the moment M^y with the y-coordinate axis as its line of action.

$$F^a = F^e$$

$$M^y = F^e e_z$$

$$M^z = -F^e e_y \tag{1-2}$$

Strength of materials calculations can accommodate the axial force ($F^a = F$). The moment M^z can be added to the moment M because both are directed along the z-coordinate direction. However, the two-dimensional theory cannot accommodate the moment M^y, which is directed along the y-coordinate direction. Again, we emphasize that the moments M^y and M^z are small and their effects can be neglected without consequence.

EXAMPLE 1-2

A square column with a cross-sectional area $A = 4\,\text{ft}^2$ and length $\ell = 16\,\text{ft}$ is subjected to an axial load ($P = -10\,\text{kip}$). The load applied in the x–y plane has eccentricities ($e_y = e_z = 3\,\text{in.}$) and an inclination ($\theta = 5°$) to the vertical, as shown in Fig. 1-9. Calculate the equivalent loads in USCS and SI units.

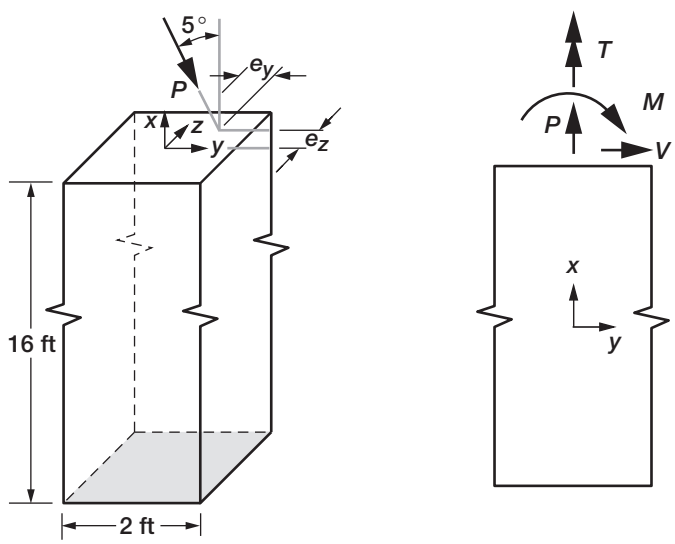

(a) Eccentric load P.

(b) Two-dimensional model.

FIGURE 1-9 *Eccentrically loaded column.*

Solution

Load Components:
The orientation of the load components is shown in Fig. 1-9*a*.

$$P_x = P\cos 5^\circ = -9.962\,\text{kip} = (-9.962 \times 4448) = -44.31\,\text{kN}$$
$$P_y = P\sin 5^\circ = 0.872\,\text{kip} = 3.88\,\text{kN}$$
$$P_z = 0$$
$$M_x = -P_y e_z = -0.872 \times 3 = -2.62\,\text{in.-k} = -0.296\,\text{kN-m}$$
$$M_y = -P_x e_z = -9.962 \times 3 = -29.89\,\text{in.-k} = -3.38\,\text{kN-m}$$
$$M_z = P_x e_y = 9.962 \times 3 = 29.89\,\text{in.-k} = 3.38\,\text{kN-m}$$

The force components for two-dimensional analysis in the *x*–*y* plane marked in Fig. 1-9*a* are as follows:

$$\textbf{\textit{Axial Load:}}\quad P^0 = P_x = -9.96\,\text{kip} = -44.31\,\text{kN}$$
$$\textbf{\textit{Shear Load:}}\quad V = P_y = 0.87\,\text{kip} = 3.88\,\text{kN}$$
$$\textbf{\textit{Bending Moment:}}\quad M = M_z = 29.89\,\text{in.-k} = 3.38\,\text{kN-m}$$
$$\textbf{\textit{Torque:}}\quad T = M_x = -2.62\,\text{in.-k} = -0.296\,\text{kN-m}$$

The two-dimensional analysis may neglect the bending moment M_y.

1.3 Sign Conventions

A consistent sign convention must be followed to solve strength of materials problem. Two sets of sign conventions have to be used. The first, is referred to as the normal (*n*) sign convention. It applies to vector quantities like external load, reaction, and displacement. The second, which is called the tensor (*t*) sign convention, applies to stress and some other response variables.

n-Sign Convention

Consider a bar subjected to an axial load P_1 as shown in Fig. 1-10. Axial load is considered positive when it is directed along the positive *x*-coordinate axis. The axial load P_1 is positive, whereas P_2 is negative. Transverse load is considered positive when it is directed along the *y*-coordinate axis. The transverse load Q_1 is positive, whereas Q_2 is negative.

The sign convention for applied or external bending moment is illustrated in Fig. 1-11*a*. Bending moment is positive when its line of action is directed along the *z*-coordinate axis. In vector notation, it is shown by a double-headed arrow in Fig. 1-11*b*. In the two-dimensional *x*–*y* plane, a positive moment can also be shown by a circle with a dot, indicating the arrowhead pointing out of the *x*–*y* plane or along the *z*-coordinate direction, as shown in Fig. 1-11*c*. In this book, we will follow engineering notation for bending moment,

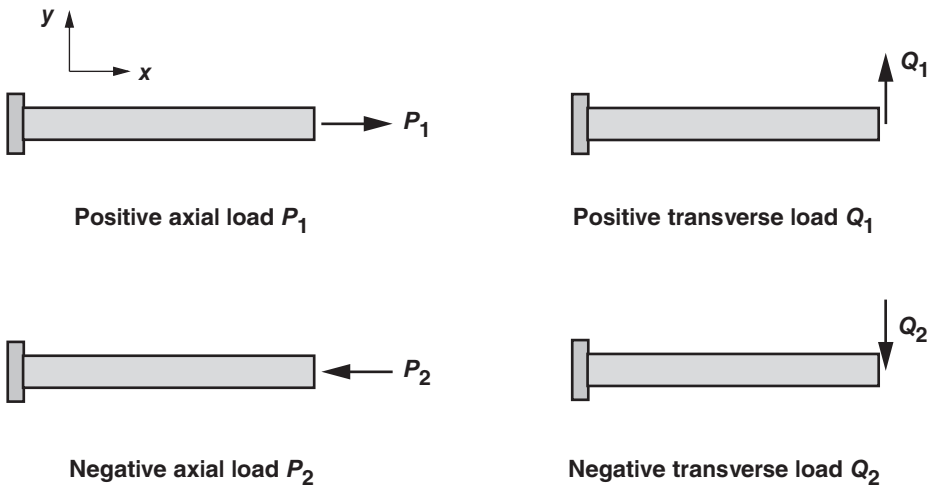

FIGURE 1-10 *Sign conventions for load.*

represented by a semicircle with an arrowhead in the counterclockwise direction, as shown in Fig. 1-11*d*. All three representations refer to the same positive applied moment M. A negative moment M^- for the three representations is shown in Figs. 1-11*e*, *f*, and *g*. The moment M^- in Fig. 1-11*e* is negative because the double-headed arrow points toward the negative z-coordinate axis. The circle with a cross representing the tail of an arrow indicates the negative moment M^- in Fig. 1-11*f*. The clockwise direction in Fig. 1-11*g* is the engineering convention for a negative moment.

The sign convention for an external torque is shown in Fig. 1-12. Positive torque T can be shown by a counterclockwise curved arrow in the y–z plane, as in Fig. 1-12*a*. Alternatively, it can be shown by a double-headed arrow directed along the positive x-coordinate axis, as shown in Fig. 1-12*b*. The torque T^- in Fig. 1-12*c* is negative because it is shown by a clockwise curved arrow or it is directed along the negative x-coordinate axis (see Fig. 1-12*d*).

Right-Hand Rule

The sign convention for torque and moment follows the right-hand rule, which is defined with an arrowhead (thumb) and a curl (fingers). The thumb of the right hand aligned along the double arrowhead represents the direction of moment or torque. The curled fingers indicate the rotational tendency. The right-hand rule is illustrated in Fig. 1-13*a* for a positive torque T. It is illustrated for positive torque T and a positive moment M in Fig. 1-13*b*. It is illustrated for negative torque T^- and moment M^- in Fig. 1-13*c*.

1.4 Load-Carrying Capacity of Members

Load-carrying capacity is the basis to classify structural members into bar, beam, shaft, and frame elements. A bar member resists only an external axial load P. The bar resists the load by inducing an internal force F that is uniform across its length. Internal force can be

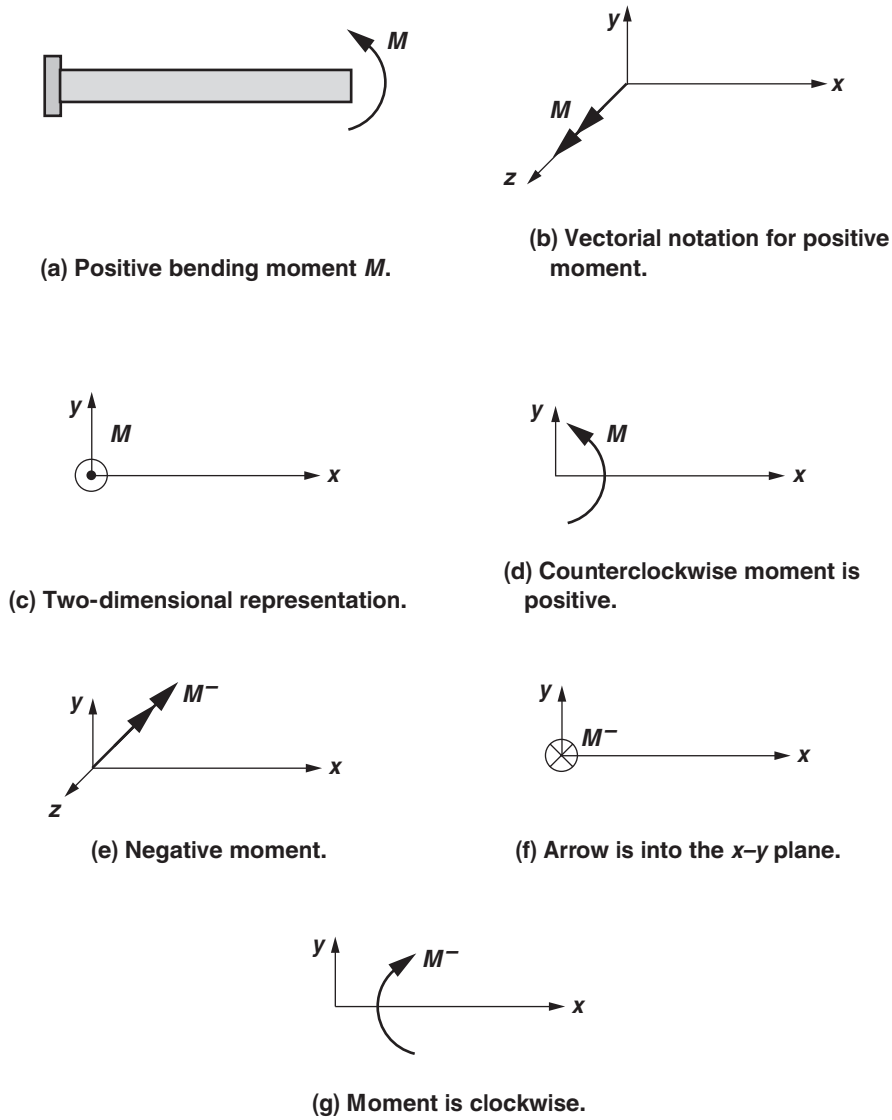

(a) Positive bending moment *M*.

(b) Vectorial notation for positive moment.

(c) Two-dimensional representation.

(d) Counterclockwise moment is positive.

(e) Negative moment.

(f) Arrow is into the *x–y* plane.

(g) Moment is clockwise.

FIGURE 1-11 *Sign conventions for external moment.*

considered as a stress resultant ($F = \int \sigma dA$), here σ is the axial stress and A is the bar area. A stress resultant is obtained by integrating stress over the cross-sectional area. Both parameters (stress-σ and area-A) are used to define the sign convention of the stress resultant (F).

t-Sign Convention

This convention is based on the product of two factors (f and n). The factor f refers to the direction of the variable, and it is assigned unity ($f = 1$) when directed along the positive

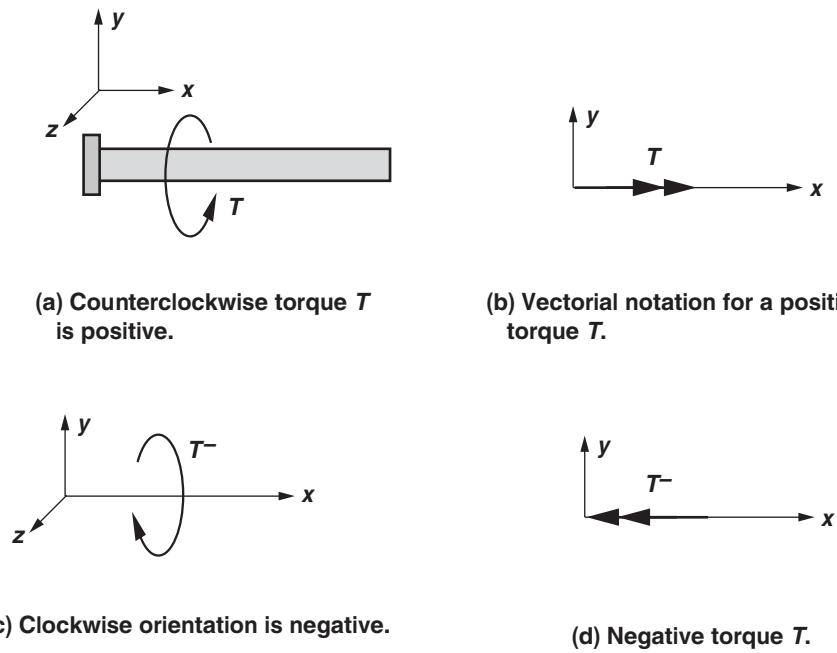

(a) Counterclockwise torque *T* is positive.

(b) Vectorial notation for a positive torque *T*.

(c) Clockwise orientation is negative.

(d) Negative torque *T*.

FIGURE 1-12 *Sign conventions for torque.*

coordinate axis. It is negative ($f = -1$) when directed along the negative axis. The second factor is the orientation of the normal to the cross-sectional area. It is assigned unity ($n = 1$) when the normal is directed along the positive coordinate direction. It is negative ($n = -1$) when pointing along the negative coordinate direction.

The t-sign convention is illustrated for a bar member that induces an axial force (F), as shown in Fig. 1-14a. The positive load P elongates the bar, inducing a tensile internal force F. At the cross section a–a, the direction of the two quantities is negative ($f_x = -1$ and $n_x = -1$ but $f_x n_x = 1$). Force (F) is directed along the negative x-coordinate axis, or ($f_x = -1$). Likewise the normal to the bar area points along the negative x-axis, or ($n_x = -1$). The product is positive ($f_x n_x = 1$), or F is a positive internal force. Forces acting in the block a–a–b–b are marked in Fig. 1-14b. In the right side of the block $f_x = 1$, $n_x = 1$, and $f_x n_x = 1$ or F is positive. It is likewise positive in the left side because $f_x = -1$, $n_x = -1$, and $f_x n_x = 1$. A positive bar force is shown by arrowheads that point at each other (see Fig.1-14c). It stretches the bar and induces tension. A negative bar force is shown by arrowheads that point away from each other as shown in Fig. 1-14d. It induces compression and contracts the bar.

A beam resists a transverse external load Q that is applied along the y-coordinate direction, as shown in Fig. 1-15a. It resists the load by inducing a shear force V and a bending moment M. The internal forces (V and M) can vary along the length of the beam. The bending moment is a stress resultant ($M = \int \sigma z dA$), here σ is the axial stress, z is the distance from the neutral axis, and A is the cross-sectional area of the beam. The shear force

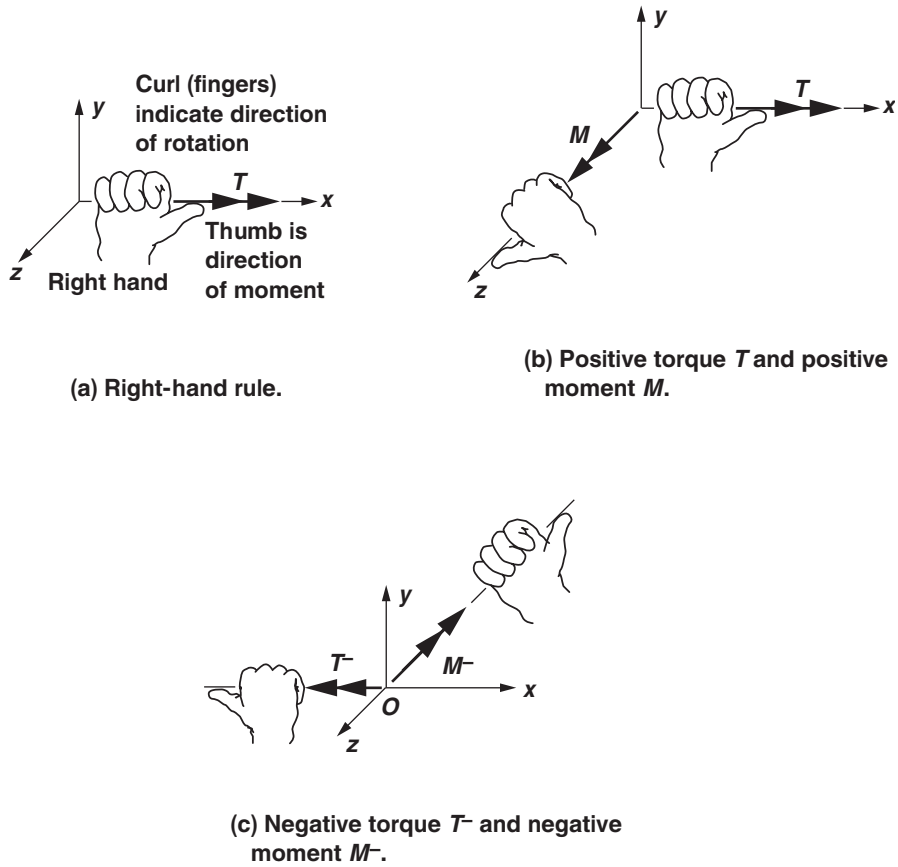

FIGURE 1-13 *Right-hand rule for torque* T *and moment* M.

is also a stress resultant ($V = \int \tau dA$); here τ is the shear stress, and A is the cross-sectional area of the beam. Both (M and V) follow the *t*-sign convention. For moment M acting in the cross-section marked *a–a* in Fig. 1-15*b*, both factors are negative ($f_m = -1$ and $n_x = -1$). The factor $f_m = -1$ because the moment M is clockwise. The factor $f_x = -1$ because the normal is along the negative *x*-coordinate axis. Because $f_m m_x = 1$, M is positive. In the right side in Fig. 1-15*c*, $f_m = 1$, $n_x = 1$, and $f_m n_x = 1$ or M is positive. Likewise, M is positive in the left side because $f_m = -1$, $n_x = -1$, and $f_m n_x = 1$. A positive moment stretches the bottom fiber of the block *a–a–b–b*, inducing tension; and contracting the top fiber, creating compression as shown in Fig. 1-15*c*. In engineering, it is referred to as sagging moment, as shown in Fig. 1-15*d*. A hogging moment, so-called because it hogs the section of a beam, is negative with tension in the top fiber and compression in the bottom fiber, as shown in Fig.1-15*e*. Negative moment is marked on the block in Fig. 1-15*f*.

The induced shear force V follows the *t*-sign convention. At the cross-section marked *a–a* in Fig. 1-15*b*, for the shear force V, the two factors are negative ($f_v = -1$ and $n_x = -1$) or V is positive. In the right side of Fig. 1-15*c*, $f_v = 1$, $n_x = 1$, and $f_v n_x = 1$ or V is positive.

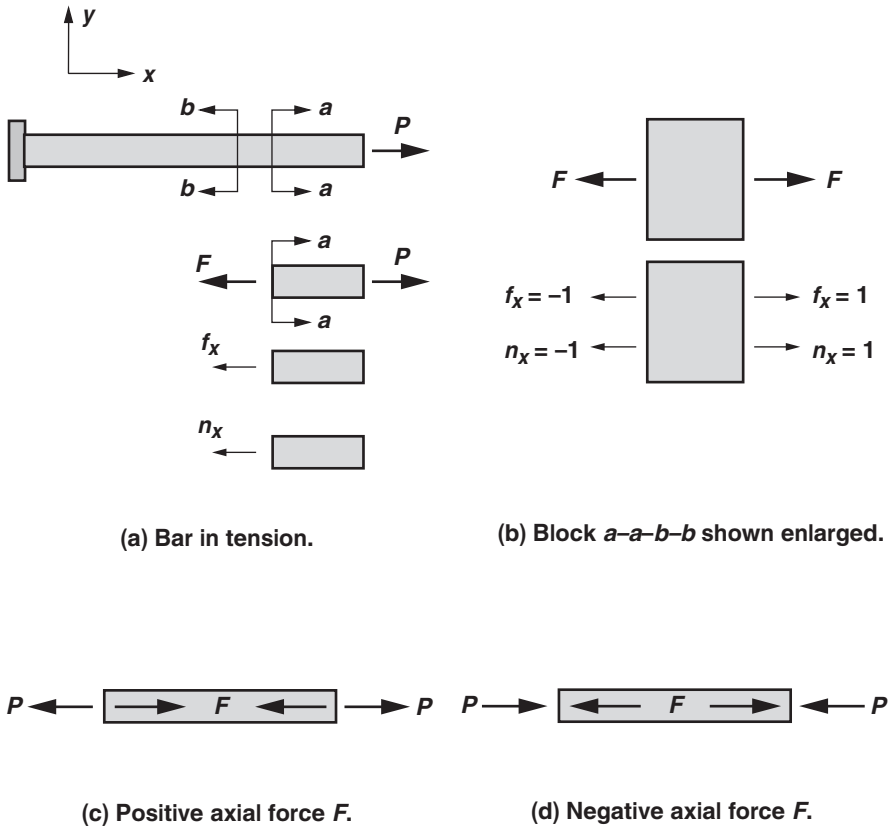

(a) Bar in tension.

(b) Block *a–a–b–b* shown enlarged.

(c) Positive axial force *F*.

(d) Negative axial force *F*.

FIGURE 1-14 t-*sign convention for axial force in a bar.*

Likewise, V is positive in the left side because $f_v = -1$, $n_x = -1$, and $f_v n_x = 1$. Shear force and bending moment in Fig. 1-15*f* are negative.

A shaft resists an external torque load T^0 that is applied along the x-coordinate direction. External torque follows the n-sign convention. It resists the load by inducing an internal torque T that is uniform across its length, as shown in Fig. 1-16. The induced torque T, which is also a stress resultant ($T = \int \tau r dA$), follows the t-sign convention. For the purpose of sign convention, a shaft member is similar to a bar member. A positive torque is shown by arrowheads that point at each other. A negative torque is shown by arrowheads that point away from each other.

A **frame member** resists axial load P, transverse load Q, and an external bending moment M^0 by inducing axial force F, shear force V, and bending moment M. A frame member combines the action of a beam and a bar. A portal frame subjected to load P, Q, and M^0 is shown in Fig. 1-17*a*. Consider the member BC. Its internal force state is not known because the analysis has not yet been completed. Analysis is initiated with a positive internal force state as shown in Fig. 1-17*b*. The orientation of the internal forces can be adjusted from the analysis results. The assumed internal force F is positive because arrows point at each other. The positive sense of bending moment M and shear force V is easily ascertained by comparing it to Fig. 1-15*c*.

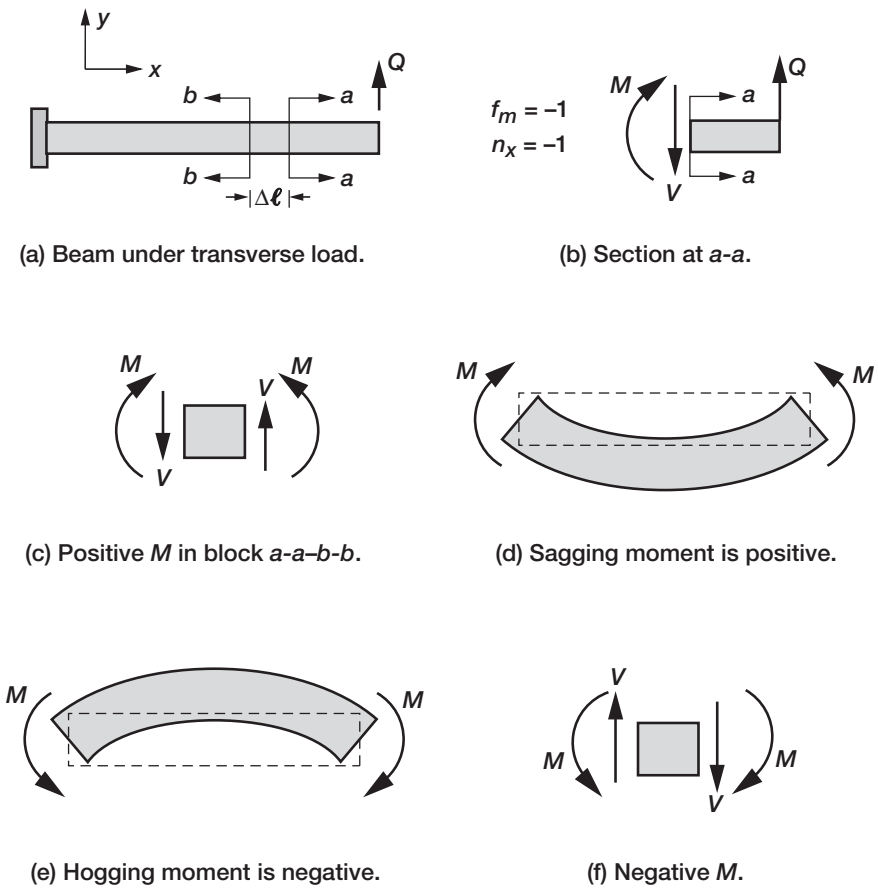

FIGURE 1-15 t-*sign convention for bending moment and shear force in a beam.*

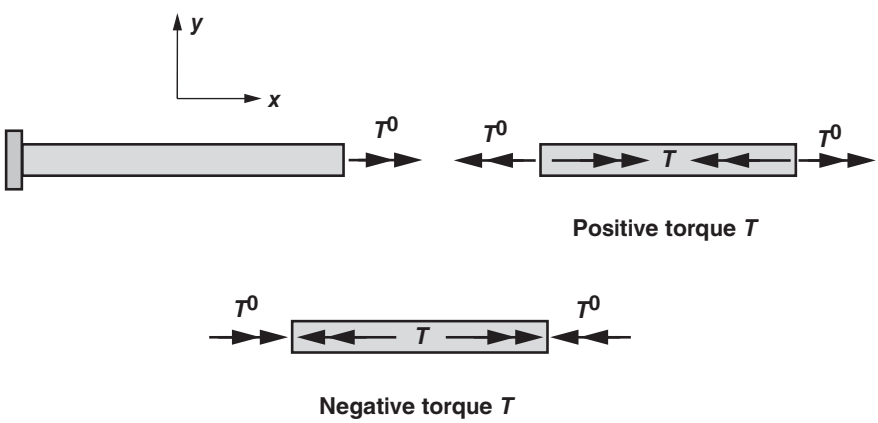

FIGURE 1-16 t-*sign convention for internal torque* T.

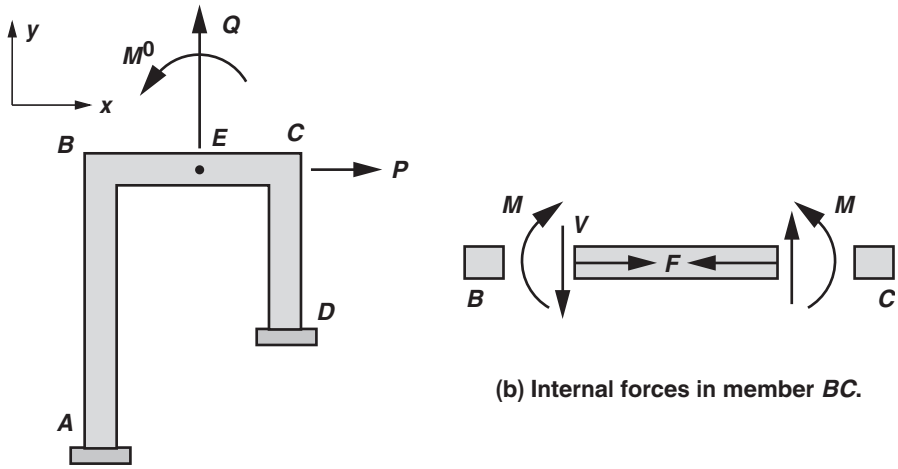

(a) Portal frame.

(b) Internal forces in member *BC*.

FIGURE 1-17 *Internal forces in a frame member.*

The four members of strength of materials can be considered as special cases of a general beam member of the solid mechanics discipline. This beam can resist three forces and three moments, as shown in Fig. 1-18. Axial force ($F = F_x$) and torque ($T = M_x$) act along the x-coordinate axis. Along the y-coordinate axis, the beam resists shear force ($V = F_y$) and a bending moment M_y. The shear force F_z and the bending moment ($M = M_z$) are along the z-coordinate axis. A bar member is obtained from the general beam by retaining the axial force along the x-coordinate axis ($F = F_x$) and setting the other five force components to zero ($F_y = F_z = M_x = M_y = M_z = 0$). A beam is obtained by retaining the shear force and bending moment ($V = F_y$, $M = M_z$) but setting the other four force components to zero ($F_x = F_z = M_x = M_y = 0$). A shaft element is obtained by retaining the torsional moment ($T = M_x$) and setting the other five force components to zero ($F_x = F_y = F_z = M_y = M_z = 0$). A frame

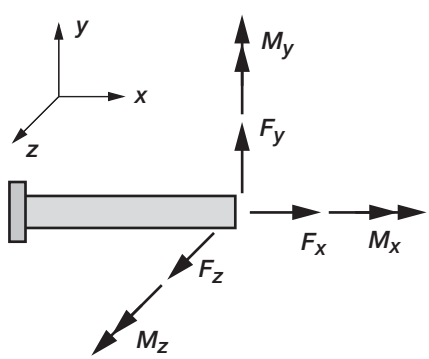

FIGURE 1-18 *A general beam member resists three forces and three moments.*

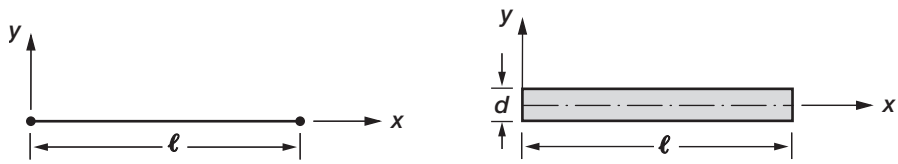

(a) Bar member. (b) Beam, shaft, or frame member.

FIGURE 1-19 *Sketches for structural members.*

member is obtained by retaining three force components ($F = F_x$, $V = F_y$, $M = M_z$) and setting the other three force components to zero ($F_z = M_x = M_y = 0$).

The sketches we will use in this book to illustrate the structural members are depicted in Fig. 1-19. A bar member is sketched by a line representing its length and the x-coordinate axis. Beam, frame, and shaft members are sketched by a rectangle. The length ℓ is along the beam centerline, which coincides with the x-coordinate axis. The y-coordinate axis, which is perpendicular to the beam centerline, coincides with the member depth d for a rectangular cross-section or with a diameter when the cross-section is circular. The bar area and the width of a rectangular beam are not shown in the sketch.

EXAMPLE 1-3

The loads on a general beam of length $\ell = 5$ m in the two-dimensional space shown in Fig. 1-20*a*, are as follows:

$$P = 1\,\text{kip}$$

$$Q = -1\,\text{kN}$$

$$M^0 = 20\,\text{ft-k}$$

$$T^0 = 1\,\text{kN-m}$$

Calculate the forces in SI and USCS units if the general beam is replaced by a bar, a shaft, a beam, and a frame member.

Solution

The axial load, bending moment, and torque are positive, whereas the shear load is negative.

A bar member carries an internal axial force ($F = P$) as shown in Fig. 1-20*b*. Loads at the nodes (P_A and P_B) are obtained from the equilibrium along the x-coordinate ($P_A = P_B = P = 1\,\text{kip} = 4.448\,\text{kN}$).

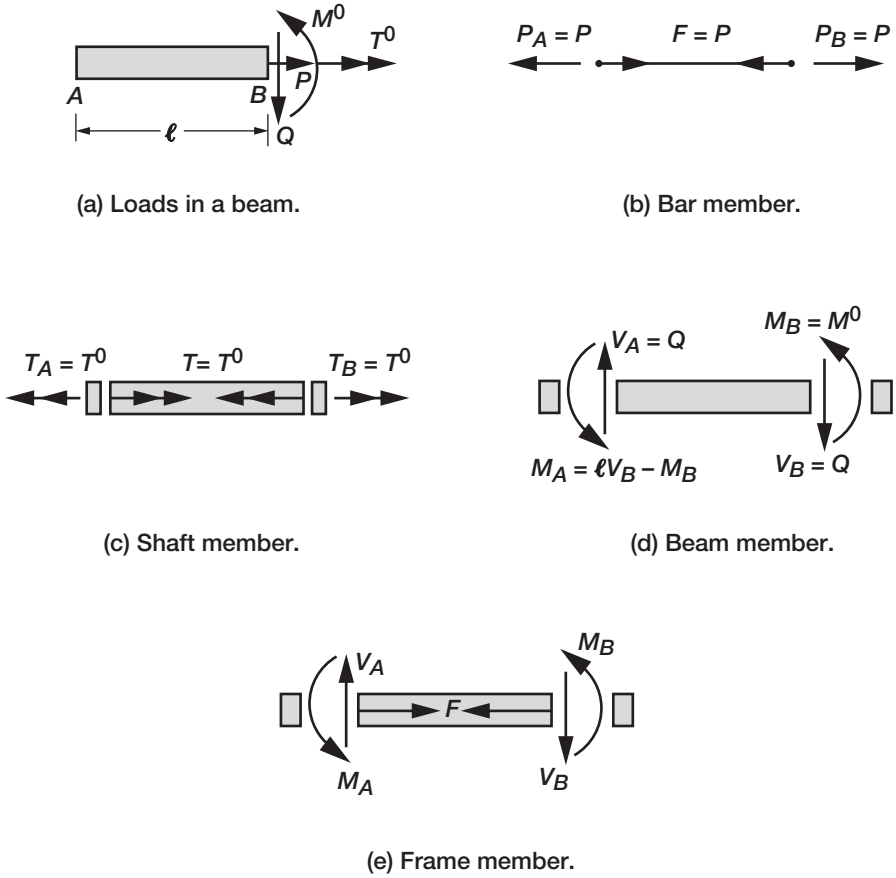

(a) Loads in a beam.

(b) Bar member.

(c) Shaft member.

(d) Beam member.

(e) Frame member.

FIGURE 1-20 *Forces on structural members.*

A shaft member carries an internal torque ($T = T^0$), which follows the t-sign convention, as shown in Fig. 1-20c. Torques at the nodes (T_A and T_B) are obtained from the rotational equilibrium about the x-axis ($T_A = T_B = T^0 = 1$ kN-m $= 738$ ft-lbf).

A beam member carries internal shear force and bending moment, which follows the t-sign convention as shown in Fig. 1-20d. At node B, $V_B = Q$, and $M_B = M^0$. The shear force at node A is obtained from the EE written along the y-coordinate direction ($V_A = Q$). The shear forces (V_A and $V_B = -1$ kN $= -225$ lbf) as marked in Fig. 1-20d are negative. The bending moment at node A is obtained from the EE written about the z-coordinate direction ($M_A = V_B\ell - M_B = -16.3$ ft-k $= -22.1$ kN-m). The moments are different at nodes A and B because shear force has to be accounted in the calculation of moment.

A frame member is obtained by combining the bar member and the beam member. It carries three internal forces at each node (F_A, V_A, M_A and F_B, V_B, M_B) as shown in Fig. 1-20e. Traditionally, the torque load is not included in a two-dimensional frame model.

Displacement

Displacement is a vector quantity that can be observed and measured. The attributes of displacement are quite similar to that of external load. Most rules developed for load are applicable to displacement, which follows the **n-sign convention**. Load and displacement separate into four distinct pairs, as follows:

1. Axial displacement u and axial load P
2. Transverse displacement v and transverse load Q
3. Angle of rotation θ and external bending moment M^0
4. Angle of twist φ and applied torque T^0

Axial displacement u is directed along the x-coordinate axis as shown in Fig. 1-21. The transverse displacement v is directed along the y-coordinate axis. Rotation θ lies in the x–y plane. A counterclockwise curved arrow represents its positive direction. When a rotation is shown by a double arrowhead, it is positive when directed along the positive z-coordinate axis. Angle of twist φ lies in the y–z plane. A counterclockwise curved arrow represents its positive direction. When the angle of twist is shown by a double arrowhead, it is positive when directed along the positive x-coordinate axis. Displacements u and v have the dimension of length. In USCS units, displacement is measured in inches. In SI units, it is measured in millimeters or centimeters. The rotation and angle of twist are dimensionless quantities. These two variables are measured either in degrees in USCS units or in radians in SI units.

Deformation

A structural member deforms under the action of internal force. Deformation is a measure of the relative displacements along two locations in the member length. For a bar, the deformation ($\beta^{\text{bar}} = u_2 - u_1$) is equal to the relative axial displacements (u_2 and u_1) of its end points (2 and 1), respectively. A beam deformation ($\beta^{\text{beam}} = \theta_2 - \theta_1$) is equal to the relative angular rotations (θ_2 and θ_1) at two locations (2 and 1) in the beam length, respectively. Shear force induces shear deformation in a beam. Shear deformation is small and it is neglected. A torque deforms a shaft member. Its deformation ($\beta^{\text{shaft}} = \varphi_2 - \varphi_1$) is equal to the relative angles of twist (φ_2 and φ_1) at two locations (2 and 1) along its length, respectively. Deformation of a frame member is the sum of the bar deformation and the

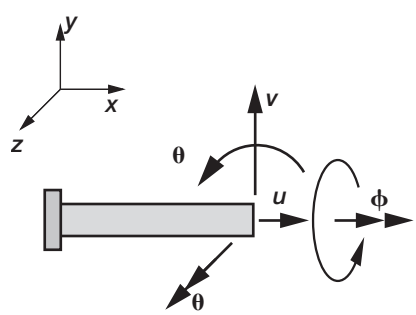

FIGURE 1-21 *Sign conventions for displacement.*

beam deformation. A rigorous treatment of deformation makes the theory of strength of materials straightforward.

Stress

Stress can be defined as the intensity of force per unit area. There are two types of stress: normal stress and shear stress. Normal stress (σ) is the intensity of normal or axial force per unit area. Shear stress (τ) is the intensity of shear force per unit area. Its dimension is force divided by area ($\sigma = F/A = FL^{-2} = ML^{-1}T^{-2}$). Stress in USCS units is measured in pound-force per square inch (psi) or in units of ksi, which is equal to 1000 psi (1 ksi = 1000 psi). Stress in SI units is measured in pascals (Pa), which is 1 newton force per one square meter. In engineering, stress is measured in megapascals (MPa), which is 1 million pascals (1 MPa = 10^6 Pa) because one Pa is a very small stress. Conversion between the two systems to measure stress is given in Table 1-3.

In the two dimensions, there are three stress components: two normal stresses (σ_x and σ_y) and a shear stress ($\tau = \tau_{xy}$), as depicted on an elemental area in Fig. 1-22*a*. Stress follows the ***t*-sign convention**. As it turns out, elasticians adopted the *t*-sign convention for the stress tensor, and we use this in strength of materials. Normal stress (σ_x) is positive if the product (*nf*) of the normal (*n*) and direction (*f*) is positive. It is easy to verify that stresses marked in Fig. 1-22*a* are positive, whereas those marked in Fig. 1-22*b* are negative. Consider the shear

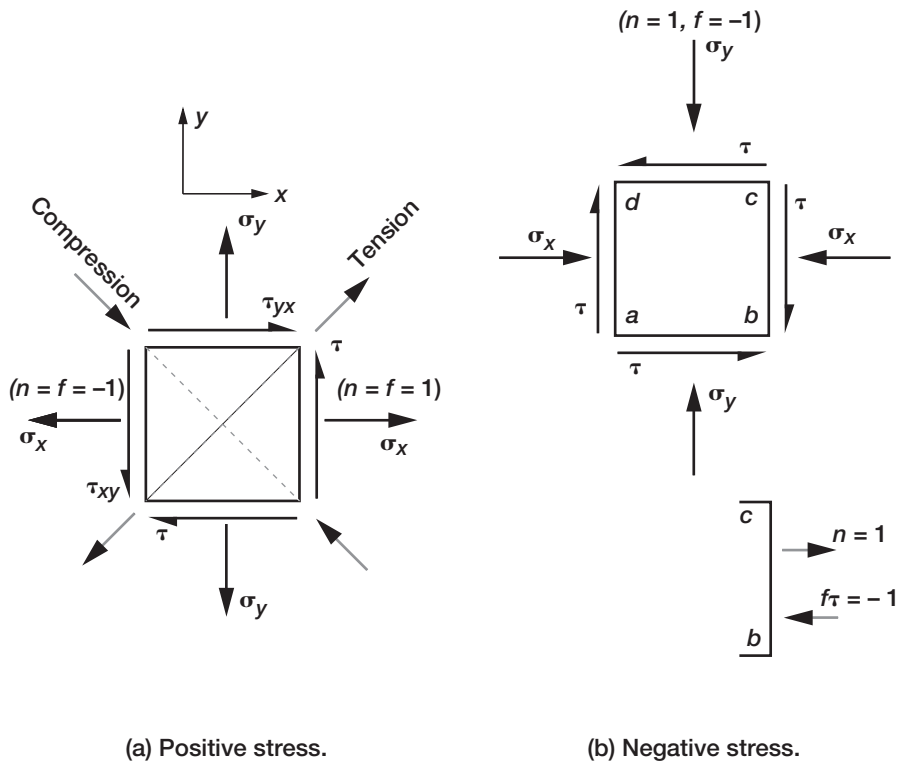

(a) Positive stress. (b) Negative stress.

FIGURE 1-22 *Stress in two dimensions.*

stress (τ) in the face *b–c* in Fig. 1-22*b*. This stress component is negative because the normal is along the positive *x*-coordinate axis, or $n = 1$, but shear stress points along the negative *y*-direction, or $f_\tau = -1$, and the product ($n_\tau f_\tau = -1$) is negative.

The positive normal stress σ_x in Fig. 1-22*a* stretches the elemental area along the *x*-coordinate direction and σ_x is tensile. The negative normal stress σ_x in Fig. 1-22*b* contracts the elemental area along the *x*-coordinate direction and σ_x is compressive. The shear stress can be transformed to obtain tension along the leading diagonal and compression along the other diagonal, as shown in Fig. 1-22*a*.

Strain

Strain is defined as the intensity of deformation and it is a dimensionless quantity. There are two types of strains: normal strain ε and shear strain γ. Normal strain is the intensity of axial elongation or contraction in a member. Shear strain is the intensity of angular deformation of an initial right angle. Like stress, there are three strain components in two dimensions; two normal strains (ε_x and ε_y) and one shear strain ($\gamma = \gamma_{xy}$). Strain, like the stress, follows the *t*-sign convention.

Positive normal strain (ε_x) induces a sympathetic negative normal strain ($\varepsilon_y = -\nu\varepsilon_x$). This phenomenon is called Poisson's effect and is illustrated in Fig. 1-23*a*. Positive or tensile strain (ε_x) elongates the member along the *x*-coordinate direction, while simultaneously contracting it along the *y*-coordinate direction that induces compressive strain of magnitude $\varepsilon_y = -\nu\varepsilon_x$. The constant ν is referred to as Poisson's ratio. It is a positive fraction and for steel and aluminum it is about $\nu = 0.3$. Shear strain γ deforms an original right angle $\pi/2$ to $\pi/2 - \gamma$ along the leading diagonal, and it increases the right angle in the other diagonal by the same amount ($\pi/2 + \gamma$), as shown in Fig. 1-23*b*.

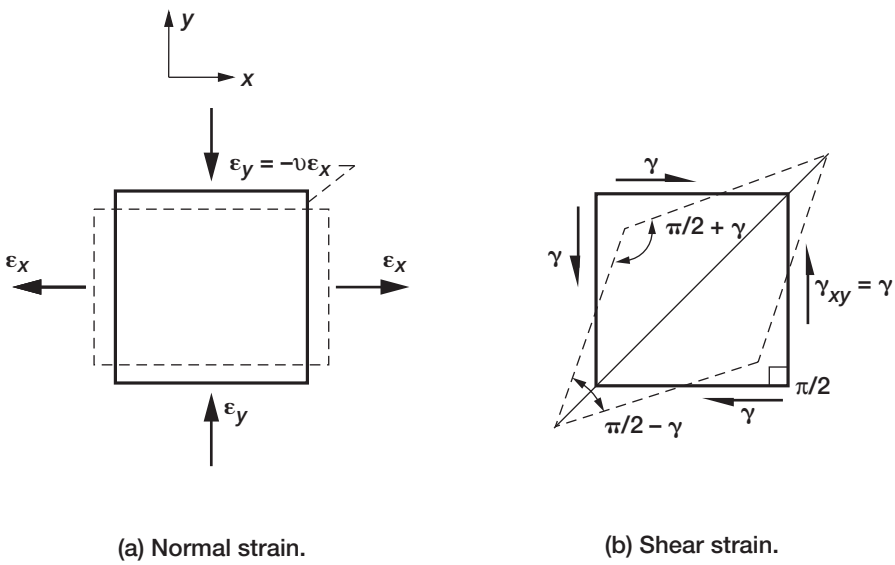

FIGURE 1-23 *Strain in two dimensions.*

EXAMPLE 1-4

The displacements and rotations measured at the two locations in the circular beam shown in Fig. 1-24 are as follows: at location $x_1 = 50\,\text{cm}$, the displacements are $u_1 = 1\,\text{cm}$, $v_1 = 1\,\text{cm}$, $\theta_1 = 5°$, and $\phi_1 = 2°$; and at $x_2 = 100\,\text{cm}$, $u_2 = 2\,\text{cm}$, $v_2 = 3\,\text{cm}$, $\theta_2 = 7°$, and $\phi_2 = 5°$. Calculate deformations in the segment of the beam between the two locations.

Solution

Axial deformation $\beta^{\text{bar}} = u_2 - u_1 = 2 - 1 = 1\,\text{cm} = 0.394\,\text{in.}$
The elongation along the x-coordinate axis at location 2 relative to location 1 is $1.0\,\text{cm} = 0.394\,\text{in.}$
The angular deformation $\beta^{\text{shaft}} = \phi_2 - \phi_1 = 5 - 2 = 3° = 0.0524\,\text{rad.}$
The shaft is twisted at location 2 relative to location 1 by 3° or 0.0524 rad.
The flexural deformation $\beta^{\text{beam}} = \theta_2 - \theta_1 = 7 - 5 = 2° = 0.035\,\text{rad.}$
The beam rotates at location 2 relative to location 1 (by $2° = 0.035\,\text{rad.}$).
The beam has a relative displacement ($\delta^{\text{beam}} = v_2 - v_1 = 3 - 1 = 2\,\text{cm} = 0.788\,\text{in.}$).
The beam deflects at location 2 relative to location 1 by 2 cm or 0.788 in.

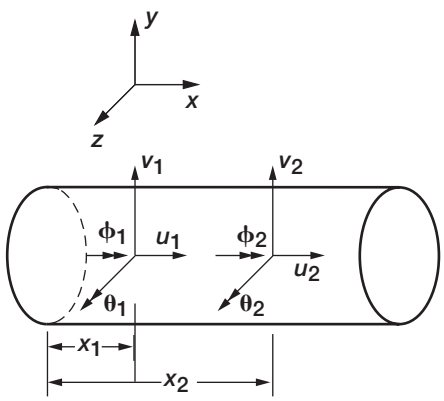

FIGURE 1-24 *Deformation in a beam.*

1.5 Material Properties

Structures are made of engineering materials that include steel, aluminum, composites, and wood. Our treatment is confined to material that is homogeneous, isotropic, and elastic. A homogeneous material has the same properties at every location throughout its volume. An isotropic material has the same properties in any direction. An elastic material returns to its original size and shape without any permanent deformation upon the removal of the force that

deforms it. A material has several characteristic properties. We discuss density ρ, coefficient of linear expansion α, Young's modulus E, shear modulus G, Poisson's ratio ν, and ductility.

Density

Density ρ is the mass contained in a unit volume of a material. It is defined as the mass per unit volume or as a ratio of mass Δm contained in an elemental volume ΔV.

$$\rho = \frac{\Delta m}{\Delta V} \tag{1-3a}$$

Weight density ρ_w is sometimes preferred, especially in calculating the weight of a structure. It is defined as the ratio of weight Δw contained in an elemental volume ΔV. It is also equal to the density multiplied by the terrestrial gravitational acceleration g.

$$\rho_w = \frac{\Delta w}{\Delta V} = g\rho \tag{1-3b}$$

Density in USCS units is measured in slug (or pound-mass) per cubic inch. In SI units, it is measured in kilogram mass per cubic centimeter. Density is used to calculate weight and the inertia force in dynamic analysis.

EXAMPLE 1-5

A 10 in.^{3} piece of aluminum weighs 1.0 lbf. Calculate its weight and mass densities in USCS and SI Units.

Solution

Weight density:

$$\begin{aligned} \rho_w &= \text{weight/volume} \\ &= 1/10 = 0.1\,\text{lbf/in.}^3 \\ &= 173\,\text{lbf/ft}^3 = 27.15\,\text{kN/m}^3 \end{aligned}$$

Mass density:

$$\begin{aligned} \rho_m &= \rho_w/g \\ &= 27,150/9.81 = 2767\,\text{kg/m}^3 \\ &= 2767/(35.31 \times 0.4535) = 172.7\,\text{lbm/ft}^3 \\ &= 172.7/32.17 = 5.34\,\text{slug/ft}^3 \end{aligned}$$

Coefficient of Linear Expansion

An engineering material can alter its dimensions when its temperature is changed. A material expands when the temperature increases, and it contracts with a decrease in the temperature. The deformation caused by a change in temperature is measured through a coefficient of linear expansion α. It is defined as the increment of length in a unit-length for a rise in temperature of 1°.

The dimension of the coefficient of expansion is per degree of temperature. In USCS units, it is measured in units of per degree Fahrenheit (1/° F or $°F^{-1}$). The unit of α in SI units is per degree Celsius (1/° C or $°C^{-1}$). The formulas to convert temperature (T) from one scale to another are

$$T(°\mathrm{F}) = \frac{9}{5}T(°\mathrm{C}) + 32 \tag{1-4a}$$

$$T(°\mathrm{F}) = \frac{9}{5}T(\mathrm{K}) - 459.67 \tag{1-4b}$$

$$T(°\mathrm{C}) = \frac{5}{9}[T(°\mathrm{F}) - 32] \tag{1-4c}$$

$$T(\mathrm{K}) = \frac{5}{9}[T(°\mathrm{F}) - 32] + 273.15 \tag{1-4d}$$

$$T(°\mathrm{C}) = T(\mathrm{K}) - 273.15 \tag{1-4e}$$

Change of temperature ΔT induces normal thermal strain ($\varepsilon^T = \alpha\Delta T$), but no thermal shear strain ($\gamma^T = 0$) is induced.

EXAMPLE 1-6

Calculate the thermal strain in a stainless steel material for a change in temperature of $\Delta T = 300\,\mathrm{K}$. The coefficient of thermal expansion of the material is $\alpha = 9.60 \times 10^{-6}/°\mathrm{F}$.

Solution

The temperature given in kelvin (K) can be changed into °F using Eq. (1-4*b*).

$$\Delta T^0\mathrm{F} = (9/5)300 - 459.67 = 80.33°\mathrm{F}$$

This temperature (ΔT) produces a thermal strain ε^T:

$$\varepsilon^T = \alpha\Delta T = 9.60 \times 10^{-6}/°\mathrm{F} \times 80.33°\mathrm{F} = 771.2 \times 10^{-6}$$

Strain, being a dimensionless quantity, remains the same in SI and USCS units.

1.6 Stress-Strain Law

Stress in a material induces strain and vice versa. Robert Hooke (1635–1703), a contemporary of Newton (1642–1727) postulated the concept through his statement: "the extension is proportional to force." The concept was further developed into Hooke's law. According to

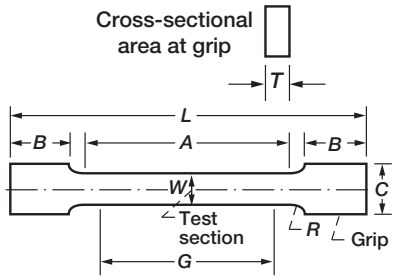

FIGURE 1-25 *Standard tension coupon.*

this law, stress at any point in an elastic solid is a function of the strain at that point. The material relationship is determined by experiment through standardized laboratory tests. The tension test is a popular method for the purpose. This test is carried out on a standard specimen, also called a test coupon. In the United States, the American Society for Testing and Materials (ASTM) publishes guidelines for such tests. An ASTM test coupon is shown in Fig. 1-25. Its dimensions are designed to produce uniform normal stress and normal strain states over a section of the coupon, referred to as the gauge length G. An acceptable set of dimensions in inches for the specimen follows:

Gauge length, $G = 8$ in.
Width inside gauge section, $W = 1.5$ in.
Total coupon length, $L = 18$ in.
Width at grip, $C = 2$ in.
Thickness of coupon, $T = 0.25$ in.
Length of grip section, $B = 3$ in.
Length of reduced section, $A = 9$ in.
Radius of filler, $R = 1$ in.

The cross-sectional area A_G of the specimen in the gauge section is obtained as the product of the width and thickness ($A_G = WT = 0.375\,\text{in.}^2$).

The coupon is tested in a uniaxial testing machine sketched in Fig. 1-26. The bottom grip section of the flat coupon is held firm by a wedge grip. The top grip section of the specimen similarly held is mounted on a movable crosshead. The crosshead is moved very slowly and uniformly at a constant rate, providing a uniaxial load P to the specimen. The load P is read directly from a measuring device called the load cell. The normal stress, which is uniform across the gauge section, is calculated as the ratio of load P to area A_G.

$$\sigma = \frac{P}{A_G} = \frac{P}{0.375} \tag{1-5a}$$

Stress cannot be measured directly from an experimental setup. It is determined from the measured load P and calculated area A_G. Strain is amenable to direct measurement through strain-measuring devices called strain gauges. Two strain gauges are bonded to

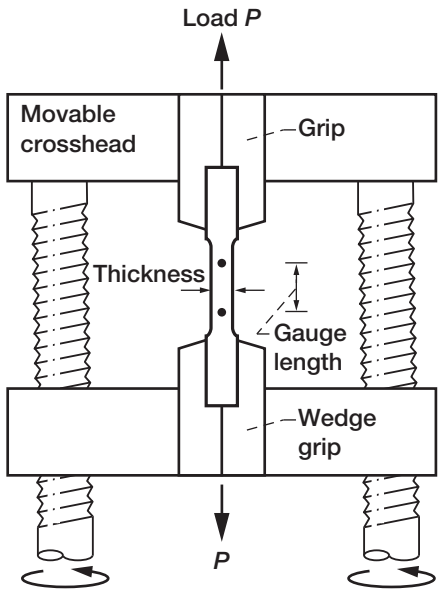

FIGURE 1-26 *Uniaxial testing.*

the specimen inside the gauge section, as shown in Fig. 1-27. The gauge n mounted along the line of action of the load is read to obtain the normal strain ε_n. Likewise, normal strain in the lateral direction ε_ℓ is read from the gauge ℓ mounted perpendicular to the gauge n.

The experiment is repeated for a different load setting P, and a set of values for stress and strain is obtained. A stress-strain diagram is constructed by plotting strain ε along the x-axis versus the stress σ along the y-axis. The shape of the stress-strain diagram depends on the material being tested. Figure 1-28 shows such a diagram (which is not drawn to scale) for a ductile steel material. The stress-strain diagram is credited to Bernoulli (1654–1705). The diagram exhibits four distinct zones: a linear region, a yielding or perfectly plastic zone, and a strain-hardening section followed by the necking region.

Elastic Region

The segment at the beginning of the diagram marked "$OA\varepsilon_a$" is the elastic region. In this region, stress and strain are linearly proportional to each other. This region is elastic because the original shape and size of the coupon are restored upon removal of the load. The proportional limit σ_p corresponding to the location marked A in Fig. 1-28 is defined as the

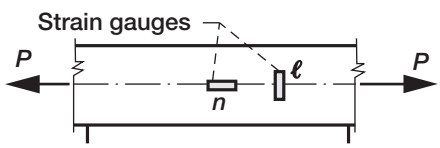

FIGURE 1-27 *An enlarged view of test section.*

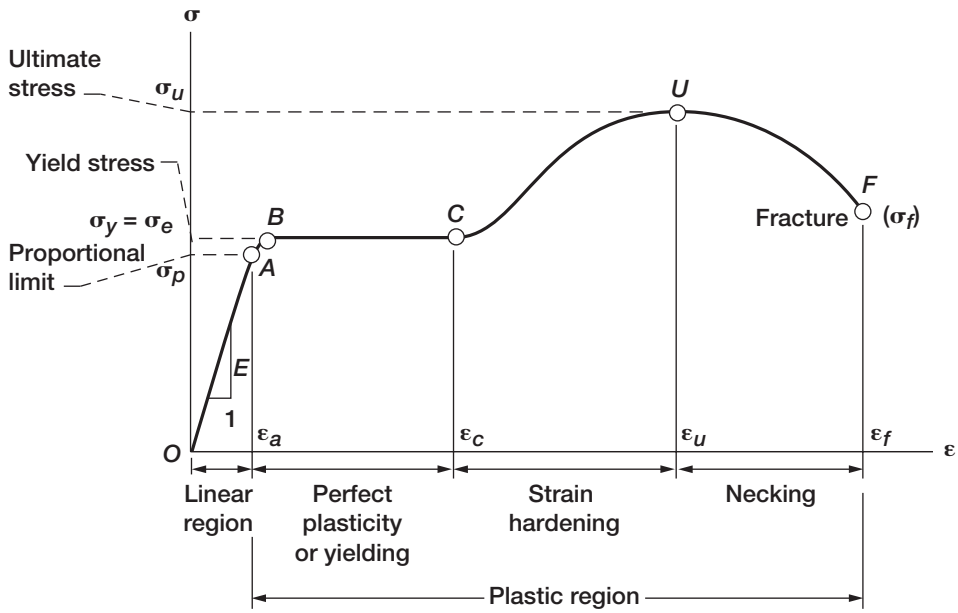

FIGURE 1-28 *Stress-strain diagram of a ductile steel material (not to scale).*

upper limit of stress inside the linear elastic region. The strength of materials calculation is confined to the elastic region.

Young's Modulus

The proportionality of stress and strain or the slope of the stress-strain diagram is the Young's modulus E of the material. Credited to Young (1773–1829), it is defined as the ratio of stress and strain:

$$E = \frac{\text{normal stress}}{\text{normal strain}} = \frac{\sigma}{\varepsilon} \tag{1-5b}$$

The definition of Young's modulus is valid provided stress is within the proportional limit of the material ($\sigma \leq \sigma_p$). Young's modulus, which is also referred to as the modulus of elasticity, is used frequently in strength of materials calculations. It has the unit of stress because strain is a dimensionless quantity. Its unit of measure in USCS units is either pound force per square inch or kilopound force per square inch. In SI units, it can be measured in pascal or megapascal. The stress-strain relation ($\sigma = E\varepsilon$) derived from the definition of Young's modulus is referred to as Hooke's law.

Poisson's Ratio

Elongation of a member under a tensile load is accompanied by a sympathetic lateral contraction. The deformation for a small portion of the tension coupon in an exaggerated

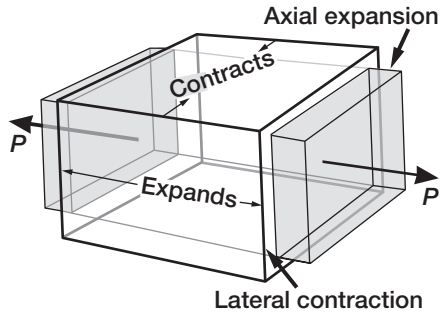

FIGURE 1-29 *Deformation of a section of text component in an exaggerated scale.*

scale is sketched in Fig. 1-29. The section elongates, inducing tensile strain ε_n along the direction of load. It also contracts along the transverse direction, inducing a compressive strain ε_ℓ. Poisson's ratio ν is defined as the negative ratio of the lateral, or transverse, strain ε_ℓ to the longitudinal strain ε_n.

$$\nu = -\frac{\text{tranverse strain}}{\text{longitudinal strain}} = -\frac{\varepsilon_\ell}{\varepsilon_n} \tag{1-5c}$$

Poisson's ratio can be determined directly as the ratio of the strains measured from gauges mounted along perpendicular directions, as shown in Fig. 1-27. Poisson's ratio is a positive fraction because the two strain components have opposite signs. It is a dimensionless quantity and has an approximate value of $\nu = 0.3$ for steel and aluminum.

Shear Modulus

Within the proportional limit of a material, shear modulus G is defined as the ratio of the shear stress τ to the shear strain γ: ($G = \tau/\gamma$). The shear modulus can be measured from a torsion test, or alternatively, it can be calculated from the Young's modulus and Poisson's ratio of a material using a closed-form elasticity relationship.

$$G = \frac{E}{2(1+\nu)} \tag{1-5d}$$

The calculated shear modulus from the formulas is accurate. The dimension of the shear modulus G is identical to that of the Young's modulus.

Yielding Zone

A stress value slightly more than the proportional limit σ_p is called the elastic limit σ_e. The material is elastic inside the small region bounded by σ_p and σ_e, marked A and B in Fig. 1-28, but the stress-strain relation becomes nonlinear. Beyond the elastic limit, the material deforms permanently. The minimum value of stress that initiates the permanent deformation is called the yield stress (σ_y) and the yield point B. Upon the initiation of yielding, the strain increases

up to a point C without any increase in the stress. This region between B and C is referred to as the yielding or the perfectly plastic region. In this plateau, the strain increases under constant load P or stress $= P/A_G$.

Strain-Hardening Section

The material begins to harden beyond the perfectly plastic region marked by C and U in Fig. 1-28 and this phenomenon is referred to as "strain hardening" because stress increases with strain. The stress-and-strain relationship is nonlinear in the strain-hardening region, which extends up to the peak stress point U referred to as the ultimate stress σ_u.

Necking Zone

At about the ultimate stress point, the cross-sectional area of the coupon A_G, hitherto considered to be a constant, begins to decrease in a localized region. This phenomenon is called necking, and it continues until the specimen breaks at a stress value referred to as the fracture stress σ_f. Fracture stress is lower than the ultimate stress ($\sigma_f < \sigma_U$). In this zone (U–F in Fig. 1-28), the strain increases but load is relieved or stress decreases. The combined region, from yielding to the fracture point (which contains the yielding, strain hardening, and necking regions) is referred to as the plastic region.

Ductility

The ability of a material to accumulate inelastic deformation without breaking is called ductility. It is measured as the percent elongation at fracture or 100 times the strain at fracture ε_f.

$$\% \text{ elongation} = 100\ \varepsilon_f = 100\frac{(L_f - L_G)}{L_G} \tag{1-5e}$$

where L_f is the length of the test section at fracture and L_G is the gauge length.

The stress-strain diagram of a ductile material is shown in Fig. 1-30a. This material exhibits considerable elongation prior to fracture. The shaded area under the stress-strain diagram is called the density of the strain energy that has been absorbed by the material prior to fracture. A ductile material absorbs a considerable amount of strain energy prior to fracture. The toughness of a material is proportional to the strain energy density. A ductile material is also tough. The stress-strain diagram of a brittle material is shown in Fig. 1-30b. This material breaks with little accumulation of plastic deformation. It absorbs a very small amount of strain energy, which corresponds to low toughness. Failure in a ductile material is accompanied with warning during the process of elongation. Failure in a brittle material can be sudden because it has a small percent of elongation at failure. Ductile material is preferred in engineering construction. Ductile material includes mild steel, aluminum and its alloys, copper, and nickel. Glass is a good example of a brittle material.

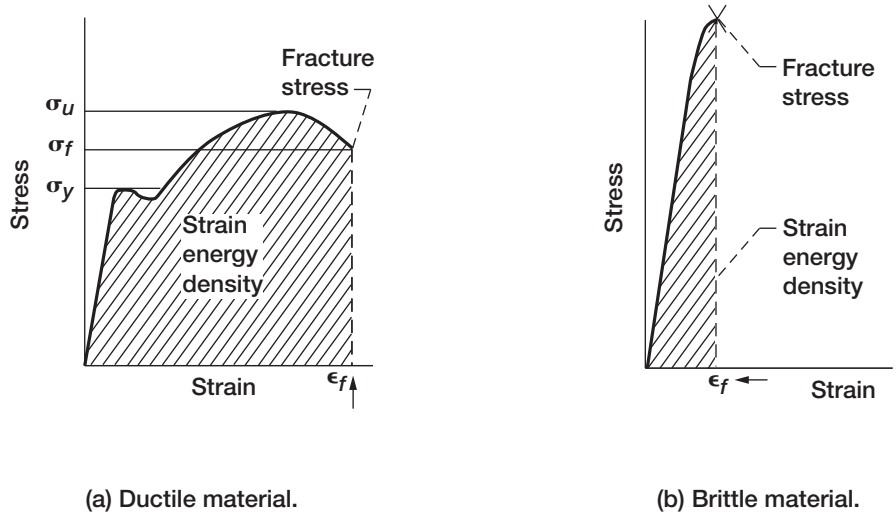

FIGURE 1-30 *Stress-strain diagram of a ductile and a brittle material.*

EXAMPLE 1-7

During a uniaxial tensile test conducted on the coupon shown in Fig. 1-25, the microstrains ($\mu = 10^{-6}$) recorded at a load step ($P = 750\,\text{lbf}$) are $67.50\,\mu$ along the load direction and $-20.25\,\mu$ along the transverse direction. Calculate the properties of the coupon material.

Solution

$$\text{Cross-sectional area of coupon } AG = 0.375\,\text{in.}^2 = 242\,\text{mm}^2$$

$$\text{Load } P = 750\,\text{lbf} = 3336\,\text{N}$$

$$\text{Stress } \sigma_p = P/AG = 2000\,\text{psi} = 13.8\,\text{N-mm}^{-2} = 13.8\,\text{MPa}$$

$$\text{Strain } \varepsilon_p = 67.50\,\mu = 67.50 \times 10^{-6}$$

$$\text{Strain } \varepsilon_t = -20.25 \times 10^{-6}$$

Young's Modulus: $$E = \frac{\text{Stress}}{\text{Strain}} = \left(\frac{2000}{67.50 \times 10^{-6}}\right) = 29.63 \times 10^6\,\text{psi}$$

$$E = \left(\frac{13.8 \times 10^6}{67.50 \times 10^{-6}}\right) = 204.44\,\text{GPa}$$

Here, GPa stands for gigapascal (or $1\,\text{GPa} = 1000\,\text{MPa} = 10^9\,\text{Pa}$)

$$\textbf{\textit{Poisson's Ratio:}} \quad \nu = -\frac{\varepsilon_t}{\varepsilon_p} = \frac{20.25}{67.50} = 0.3$$

$$\textbf{\textit{Shear Modulus:}} \quad G = \frac{E}{2(1+\nu)} = \frac{E}{2.6} = \left(\frac{29.63}{2.6} \times 10^6\right) = 11.4 \times 10^6 \text{ psi}$$

$$E = \frac{204.44}{2.6} \text{ GPa} = 78.63 \text{ GPa}$$

The material of the coupon appears to be steel with a Young's modulus of $E = 30 \times 10^6$ psi $= 207$ GPa, a Poisson's ratio of $\nu = 0.3$, and a shear modulus of $G = 11.4 \times 10^6$ psi $= 79$ GPa.

EXAMPLE 1-8

A square aluminum plate of area 1 in.^{2} is subjected to a tensile stress of 30 MPa along the x-coordinate direction. The Young's modulus of the material is $E = 10{,}000$ ksi and its Poisson's ratio is $\nu = 0.28$. Calculate the shear modulus and the induced strains.

Solution

Young's modulus given in ksi is changed to MPa to obtain $E = 10{,}000 \times 6895 \times 10^3 = 68{,}947.6$ MPa $= 68.95$ GPa.

Stress $\sigma_x = 30$ MPa and strain along the x-coordinate direction: $\varepsilon_x = \sigma_x/E = 30 \times 10^6/68.95 \times 10^9 = 0.435 \times 10^{-3} = 0.0435$ percent.

Strain is induced along the y-coordinate direction because of the Poisson's effect:

$$\varepsilon_y = -\nu \times \varepsilon_x = -0.28 \times 0.435 \times 10^{-3} = -0.122 \times 10^{-3} = -0.0122 \text{ percent.}$$

A compressive strain is induced in the y-coordinate direction because of a tensile strain along the x-coordinate direction. Poisson's effect applies to strain but not to stress. No stress is induced along the y-coordinate direction because of σ_x.

Shear modulus $G = \frac{E}{2(1+\nu)} = 10{,}000/(2 \times 1.28) = 3906$ ksi $= 26.93$ GPa.

1.7 Assumptions of Strength of Materials

The theory of strength of materials is based on two primary assumptions. The first pertains to the material of the structure, whereas the second is related to the magnitude of the displacement. The assumptions make analysis linear, leading to the linear elastic

theory of strength of materials. The assumptions do not unduly restrict the scope of the subject because the behavior of a vast majority of structures falls in the linear domain.

Material Linearity

Structures are made of material of one kind or other. The stress-strain diagram shown in Fig. 1-28 contains almost all the material information required for analyzing and designing a structure. Strength of materials analysis is confined to the elastic region marked "$Oa\varepsilon_a$" in Fig. 1-28, wherein the stress is linearly proportional to strain and Hooke's law is linear. For a structure made of mild steel, the material linearity is satisfied provided the induced stress σ is below the proportional limit ($\sigma \leq \sigma_p$; $\sigma_p = 35$ ksi or 241 MPa) and the induced strain ε is less than the proportional strain ($\varepsilon \leq \varepsilon_p$; $\varepsilon_p = 0.0012$ in./in. $= 0.12$ percent). The Young's modulus ($E = 30{,}000$ ksi), shear modulus ($G = 11{,}538$ ksi), and Poisson's ratio ($\nu = 0.3$) remain constant throughout the elastic region. The magnitude of strain at $\varepsilon \leq 0.0012$ in./in. is very small compared with the magnitude of stress at 35 ksi or the modulus of elasticity at 30,000 ksi. The magnitude of this nondimensional quantity is expressed as a percent strain ($\varepsilon = 0.0012$ is equal to $\varepsilon = 0.12$ percent strain).

Geometrical Linearity and Small-Displacement Theory

In a structure, the displacement induced due to the application of load is much smaller than the geometrical dimensions of the structure. Take, for example, a long-span bridge that is susceptible to displacement. We do not experience any movement of the bridge floor while driving on it because the displacement is really small. In analysis, the displacement is assumed to be small, and it is a valid assumption for the vast majority of real-life structures. Because the displacement is small, equations of strength of materials written for undeformed configurations remain valid even for the deformed structure.

The attributes of geometrical linearity are illustrated through the example of the cantilever beam shown in Fig. 1-31. It is a rectangular beam of length ℓ, depth d, thickness t, and Young's modulus E. It is clamped at location A, and it is free at B, as shown in Fig. 1-31a. The free end B is subjected to a load P applied along the negative y-coordinate direction. The coordinate system (x, y), prior to the application of load, is referred to as the initial, or undeformed, coordinate system. The load deforms the cantilever, inducing a displacement v, which can be small (v^s), as shown in Fig. 1-31b, or large (v^ℓ), as depicted Fig. 1-31c. For a small displacement, the deformed coordinate system (x^s, y^s) is not too far away from the undeformed coordinates (x, y). In other words, equations written with respect to the undeformed coordinates (x, y) can be considered to be valid even for the deformed system (x^s, y^s). The intensity of deformation in the beam can be expressed through a curvature parameter κ, which is defined as the reciprocal of the radius of curvature R. In the small displacement theory, the curvature is equal to the second derivative of the displacement, whereas rotation or slope θ is equal to the first derivative of the displacement.

$$\kappa = \frac{1}{R} = \frac{d^2 v^s}{dx^2} \tag{1-6a}$$

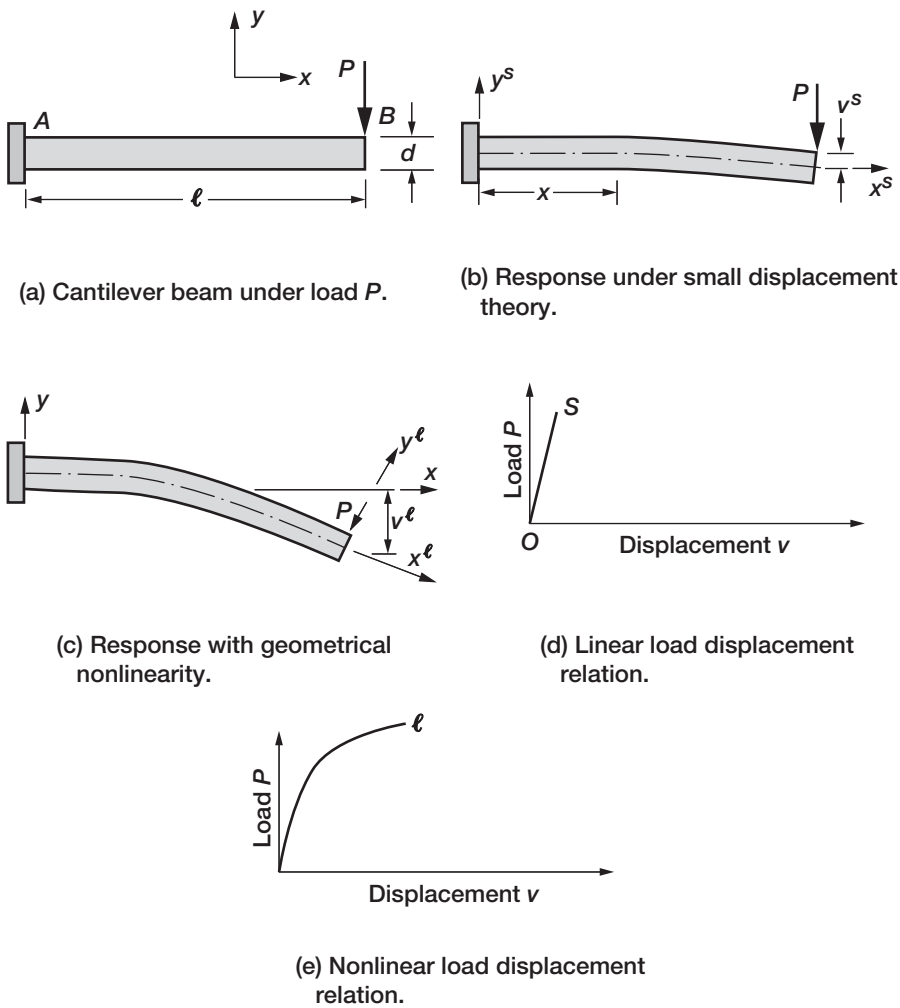

FIGURE 1-31 *Geometrical linearity and small displacement theory.*

$$\theta = \frac{dv^s}{dx} \tag{1-6b}$$

Under these assumptions, the load displacement relation is linear, as shown in Fig. 1-31*d*. The displacements of the cantilever beam can be calculated from the formulas.

$$v^s(x) = \frac{4Px^3}{Etd^3} \tag{1-6c}$$

$$v^{s_{\max}} = \frac{4P\ell^3}{Etd} \tag{1-6d}$$

Here $v^s(x)$ is the displacement at location x and the maximum displacement $v^{s_{\max}}$ occurs at the free end B. The load displacement relationship is linear, as shown in Fig. 1-31d.

If the magnitude of the load P is increased, the displacement can grow into the geometrically nonlinear domain, as shown in Fig. 1-31c. The deformed coordinate system (x^ℓ, y^ℓ) has moved substantially from the undeformed system (x, y) and the load direction might also have changed. A curvilinear coordinate system may have to be employed for its analysis. Equations have to be written with respect to the deformed coordinates (x^ℓ, y^ℓ). The load displacement relation becomes nonlinear (see Fig. 1-31e), and the curvature term has to be redefined to include the square of rotation because it is no longer small compared to unity.

$$v^\ell(x) = v^s(x) - f^n(P, E, d, t) \tag{1-6e}$$

$$\kappa = \frac{1}{R} = \frac{\dfrac{d^2 v^\ell}{dx^{\ell 2}}}{\left[1 + \left(\dfrac{dv^\ell}{dx^\ell}\right)^2\right]^{3/2}} \tag{1-6f}$$

The curvature definition given by Eq. (1-6f) is reduced to Eq. (1-6a) when the square of the rotation is much smaller than unity $\{(dv^\ell/dx^\ell)^2 \ll 1\}$ and coordinate $x^\ell = x^s = x$. The function f^n (P, E, d, t) is nonlinear in load P, modulus E, and sizes d and t.

The nonlinear strain displacement relation becomes linear when the displacement is small.

In summary, the assumptions of the small displacement theory are:

1. Displacement is small in comparison to the smallest dimension of the structure.
2. The rotation is small and the square of the rotation is much smaller than unity.
3. The strain is small and its square can be neglected.
4. The equations written in the undeformed configuration of the structure are valid even for the deformed configuration.
5. The strain displacement relationship is linear.

The geometrical linearity can be independent of the material linearity and vice versa. In strength of materials, we will assume both material linearity and geometrical linearity. Because of this assumption, all the equations of strength of materials are linear. The nonlinear analysis, which is much more complex than the linear theory, is covered in advanced solid mechanics courses. Nonlinear theory has special applications, but the linear theory is routinely used in almost all design calculations.

EXAMPLE 1-9

The deformed shape of an initially square aluminum plate with 2-in.-long sides is shown in Fig. 1-32a. Calculate the average strains in the plate.

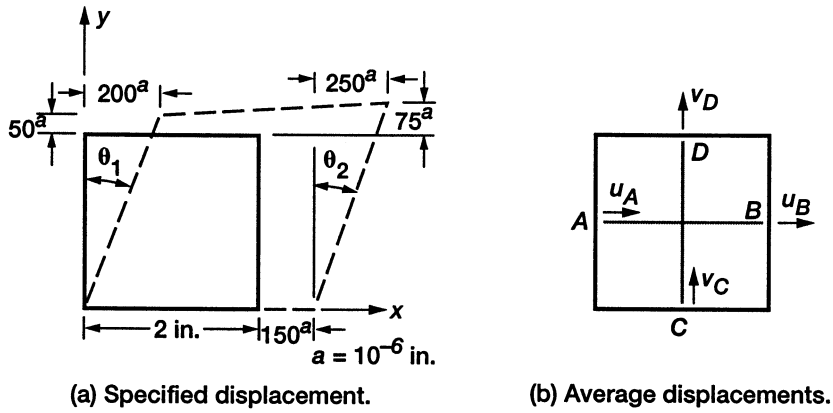

FIGURE 1-32 *Strains in a plate.*

Solution

The average normal strain is obtained as the ratio of the average elongation to the initial length. The shear strain is obtained as the change of the original right angle.

Average Displacements along the x-Coordinate Direction:
Displacements (u_A and u_B) along with the x-coordinate direction as marked in Fig. 1-32*b* are as follows:

$$u_A = \frac{200}{2} = 100 \times 10^{-6}\,\text{in.}$$
$$u_B = 150 + \frac{250}{2} = 275 \times 10^{-6}\,\text{in.}$$

Deformation (δ_x) is

$$\delta_x = u_B - u_A = 175 \times 10^{-6}\,\text{in.}$$

Along the y-Direction:

$$v_C = 0$$
$$v_D = \frac{50 + 75}{2} = 62.5 \times 10^{-6}\,\text{in.}$$
$$\delta_y = v_D - v_C = 62.5 \times 10^{-6}\,\text{in.}$$

Rotations in the x–y Plane:

$$\theta_1 = \frac{200 \times 10^{-6}}{2} = 100 \times 10^{-6}\,\text{rad}$$

$$\theta_2 = \frac{250 \times 10^{-6}}{2} = 125 \times 10^{-6}\,\text{rad}$$

Normal Strain Components:

$$\varepsilon_x = \frac{\delta_x}{a} = \frac{175 \times 10^{-6}}{2} = 87.5 \times 10^{-6} = 0.009\,\text{percent}$$

$$\varepsilon_y = \frac{\delta_y}{a} = \frac{62.5 \times 10^{-6}}{2} = 31.25 \times 10^{-6} = 0.003\,\text{percent}$$

Shear Strain:

$$\gamma_{xy} = \theta_1 + \theta_2 = 225 \times 10^{-6} = 0.0225\,\text{percent}$$

1.8 Equilibrium Equations

The equilibrium equations (EE) are the most important equations of analysis. Fortunately, these equations are simple and straightforward. Force balance is the central concept behind the equilibrium equations. The equilibrium concept matured over a long period of time as eminent scientists and engineers worked in different applications. It is credited to Newton (1642–1727). However, it was used earlier by Archimedes (287–212 B.C.) in levers and pulleys, by Leonardo da Vinci (1452–1519) in virtual work principles, by Tyco Brahe (1564–1601) and Kepler (1571–1630) in planetary motion, just to mention a few different applications. We will introduce the equilibrium equations in the three-dimensional space. These will be specialized to strength of materials applications in the subsequent chapters of this book.

Consider a Cartesian coordinate system and the displacements u, v, and w along the x, y, and z directions, as shown in Fig. 1-33. Also consider the three rotations (θ_x, θ_y, θ_z) about the same three axes. In general, a point in a structure can displace by an amount u along the x-coordinate direction and by amounts v and w along the y- and z-coordinate directions, respectively. The same point can also rotate by θ_x, θ_y, and θ_z amounts about the coordinate directions, respectively. The six variables (u, v, w, θ_x, θ_y, θ_z) are referred to as the six displacement degrees of freedom (dof). Displacements encompass translations, or translatory displacements (u, v, w), and rotation or rotatory displacements (θ_x, θ_y, θ_z). One equilibrium equation can be written along each of the six displacement directions, yielding six equilibrium equations. The equations along the displacement directions (u, v, w) represent the three force balance conditions. The equations along the rotation directions (θ_x, θ_y, θ_z) represent the three moment balance conditions. The six EE along the six directions follow.

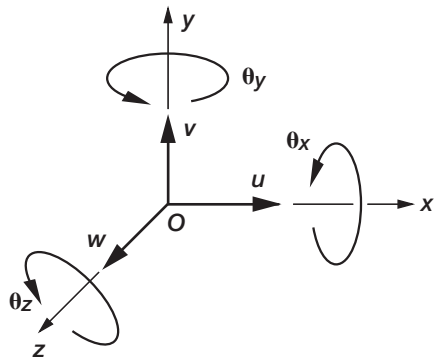

FIGURE 1-33 *Reference frame to formulation of equilibrium equations.*

The sum of forces along the x-axis or u-direction is zero:

$$\sum_{x\text{-axis}} F = 0 \tag{1-7a}$$

along the y-axis or ν-direction, it is zero:

$$\sum_{y\text{-axis}} F = 0 \tag{1-7b}$$

along the z-axis or w-direction, it is zero:

$$\sum_{z\text{-axis}} F = 0 \tag{1-7c}$$

The sum of moments about the x-axis or θ_x-direction is zero:

$$\sum_{\text{about } x\text{-axis}} M = 0 \tag{1-7d}$$

about the y-axis or θ_y-direction, it is zero:

$$\sum_{\text{about } y\text{-axis}} M = 0 \tag{1-7e}$$

about the z-axis or θ_z-direction, it is zero:

$$\sum_{\text{about } z\text{-axis}} M = 0 \tag{1-7f}$$

Sign convention for the EE is discussed in Appendix 4. The nature of the equilibrium equation is explained by considering two examples: a three-legged table and a four-legged

table. These problems lead to the definition of the determinate problem and indeterminate problem in strength of materials.

Three-Legged Table Problem

A three-legged circular wooden table is shown in Fig. 1-34*a*. The three legs of the table form an equilateral triangle with sides a and centroid at G. The height of the table is h. The tabletop is circular with radius r. The table is resting on a level floor made of a rigid material, such as stone, and the tabletop is also considered to be rigid. (A rigid material cannot deform under any circumstance.) The centroid G is considered as the origin of the x, y, z coordinate system. A load of magnitude P is applied along the negative y-coordinate direction with eccentricities e_x and e_y. The problem is to determine the three reactions (R_1, R_2, R_3) along the three legs of the table.

Step 1—Stability of the Table

The table without any restraint is free to displace as a rigid body by u, v, and w inches along the x-, y-, and z-coordinate directions. Likewise, it can rotate as a rigid body by θ_x, θ_y, and θ_z radians along the three axes (see Fig. 1-33*a*). The analysis model must be stable; that is, it must not move as a rigid body. A stable model requires the restraining of at least six displacement degrees of freedom, as shown in Fig. 1-34*b*.

1. Three degrees of freedom are restrained by attaching leg 1 to the foundation through a hinge or $u_1 = v_1 = w_1 = 0$.

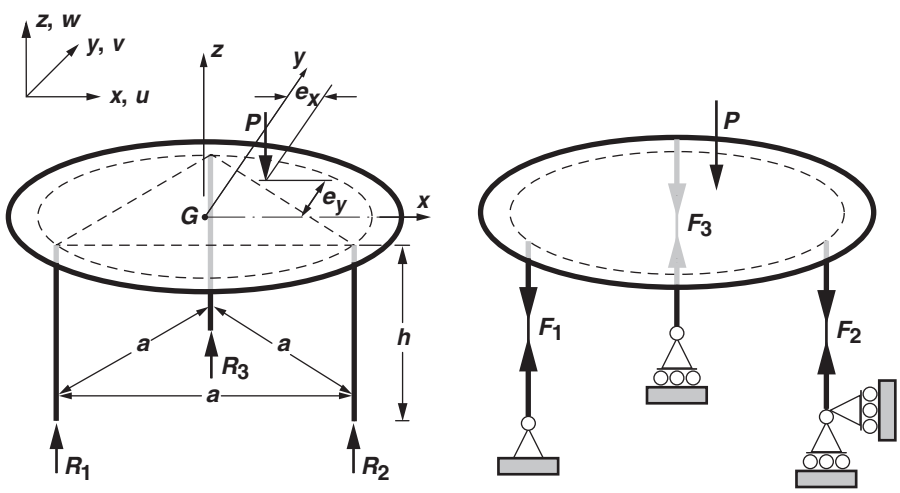

(a) Circular table under load *P*. **(b) Table with boundary restraints.**

FIGURE 1-34 *Three-legged determinate table problem.*

2. Two degrees of freedom are restrained by preventing the movement of legs 2 and 3 along the z-coordinate direction ($w_2 = w_3 = 0$).
3. Despite the five restraints, the table can rotate about the z-coordinate, with leg 1 as the axis. A restraint at the second leg along the x-coordinate direction ($u_2 = 0$) prevents this motion. The six restraints ($u_1 = v_1 = w_1 = w_2 = w_3 = u_2 = 0$) have eliminated the rigid body motion of the table and it is a stable model for analysis.

Step 2—Simplification of Analysis

Each of the six restraints, in principle, can induce six reactions. Because the rigid tabletop cannot stretch in the x–y plane, we assume that there is no movement of the legs in a parallel (x, y) plane at the support level. Since no load is applied in either the x- or y-coordinate directions, it is assumed that there are no reactions along the x- or y-axis. In consequence, the problem has three unknown reactions (R_1, R_2, R_3) along the three legs, as shown in Fig. 1-34a.

Step 3—Calculation of Reactions

The equilibrium equations must be employed to calculate the three reactions. The six equilibrium equations, Eqs. (1-7a) to (1-7f), for the table problem degenerate into three independent equations.

Equilibrium Eqs. (1-7a) and (1-7b) are trivially satisfied because there are no forces along the x or y directions.

The EE [Eq. (1-7c)] is obtained as the algebraic sum of the three reactions and the load along the z-coordinate.

$$-R_1 - R_2 - R_3 = -P \tag{1-8a}$$

The EE [Eq. (1-7d)] is obtained as the algebraic sum of the moments about the x-axis.

$$\frac{a}{2\sqrt{3}}(R_1 + R_2 - 2R_3) = -e_y P \tag{1-8b}$$

Likewise, rotational equilibrium about the y-coordinate axis yields

$$\frac{a}{2}(-R_1 + R_2) = e_x P \tag{1-8c}$$

The rotational equilibrium equation along the z-direction [Eq. (1-7c)] is satisfied trivially because there are no loads in the x–y-plane.

Three Eqs. (1-8) containing three unknowns are solved to obtain the reactions.

$$R_1 = \frac{P}{3a}(a - \sqrt{3}e_y - 3e_x) \tag{1-9a}$$

$$R_2 = \frac{P}{3a}(a - \sqrt{3}e_y + 3e_x) \tag{1-9b}$$

$$R_3 = \frac{P}{3a}(a + 2\sqrt{3}e_y) \tag{1-9c}$$

When the load is applied at the centroid G with no eccentricities ($e_x = e_y = 0$), then each leg carries one-third of the load ($R_1 = R_2 = R_3 = P/3$).

Determinate Problem

The internal forces along the legs of the table are under compression and in magnitude are equal to the reactions ($F_1 = R_1$, $F_2 = R_2$, and $F_3 = R_3$). If a problem can be solved for the internal forces including the reactions through an application of the equilibrium equations alone, then it is called a determinate problem. Such problems are also referred to as statically determinate problems because they can be solved by an application of the equilibrium equations of statics.

The three-legged table is a determinate problem because the application of the equilibrium equations produced the solution for the forces and the reactions. The solution of a determinate problem is straightforward, and in this book it is treated first. If the internal forces and reactions cannot be determined from the equilibrium equations alone, then it is called an indeterminate problem. Navier's table, discussed in this chapter and solved in Chapter 14, is an example of an indeterminate problem.

EXAMPLE 1-10

The uniform beam of length $\ell = 10\,\text{ft}$ shown in Fig. 1-35*a* weighs 1000 N and it is subjected to $P = 1\,\text{kip}$ gravity load at the one-quarter span location. Calculate the reactions at the supports.

For this problem, the weight is specified in SI units whereas the length and load are given in USCS units. All parameters must be converted either to USCS units or SI units prior to the solution of the problem. Here, we solve the problem in USCS units.

$$\text{Weight} = 1000\,\text{N} = 1000/4.45 = 224.7\,\text{lbf}$$

For calculating the reactions, the beam weight can be lumped at the midspan. The analysis model is shown in Fig. 1-35*b*. The reaction R_A at node A is obtained by taking the moment about node B and setting it to zero.

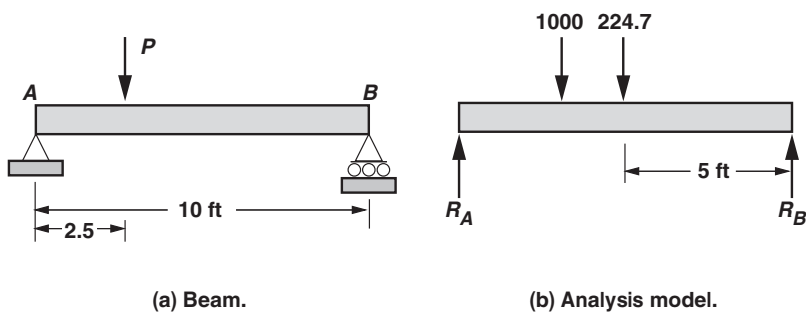

FIGURE 1-35 *Reaction in a beam.*

Moment about Node B: $R_A \times 10 - 1000 \times 7.5 - 224.7 \times 5 = 0$
or $R_A = 862.35\,\text{lbf}$

Likewise, the reaction (R_B) at node B is obtained by taking the moment about node A and setting it to zero.

Moment about Node A: $-R_B \times 10 + 224.7 \times 5 + 1000 \times 2.5 = 0$
or $R_B = 362.35\,\text{lbf}$

The sum of the reactions must be equal to the applied load. This condition is satisfied because ($R_A + R_B = 862.35 + 362.35 = 1224.7$) = (weight + P = 1000 + 224.7 = 1224.7 lb).

The reactions in SI units are

$$R_A = 862.35 \times 4.45 = 3.84\,\text{kN and } R_B = 362.35 \times 4.45 = 1.61\,\text{kN}.$$

Navier's Table Problem

Navier attempted to determine the four reactions along the legs of a table, which is referred to as Navier's table problem. The symmetrical table is made of wood, rests on a level stone floor, and is subjected to a load P with eccentricities e_x and e_y, as shown in Fig. 1-36. The table height is h and the distances between the legs along the x- and y-directions are $2a$ and $2b$, respectively. The tabletop is considered to be rigid. The problem is to calculate the four reactions (R_1, R_2, R_3, R_4) along the four legs of the table. The solution process is similar to that for the earlier table problem except for the number of reactions—four instead of three for the circular table. The table has only three independent equilibrium equations consisting of one transverse equilibrium equation along the z-coordinate direction and two moment equilibrium equations along the x- and y-coordinate directions. The three equations are as follows:

$$-R_1 - R_2 - R_3 - R_4 = -P \tag{1-10a}$$

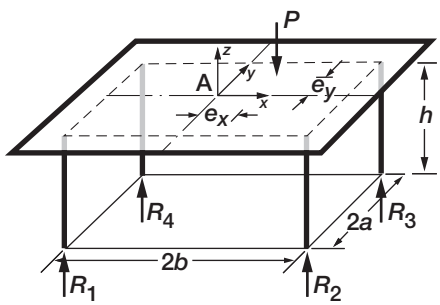

FIGURE 1-36 *Navier's indeterminate table problem.*

$$R_1 + R_2 - R_3 - R_4 = -\frac{e_y}{a}P \tag{1-10b}$$

$$-R_1 + R_2 + R_3 - R_4 = \frac{e_x}{b}P \tag{1-10c}$$

These three equilibrium equations contain four unknown reactions. The four reactions cannot be determined from the three equations alone. The equilibrium equations are indeterminate because the number of unknown reactions exceeds the number of equilibrium equations. The equilibrium equations must be augmented with an additional equation to solve for the four reactions. The additional equation is called the compatibility condition. Navier's indeterminate table problem requires one compatibility condition that must be added to the three equilibrium equations, yielding four equations that can be solved for the four reactions.

The vast majority of engineering problems are **indeterminate** in nature. The solution of an indeterminate problem requires the simultaneous application of the equilibrium equations

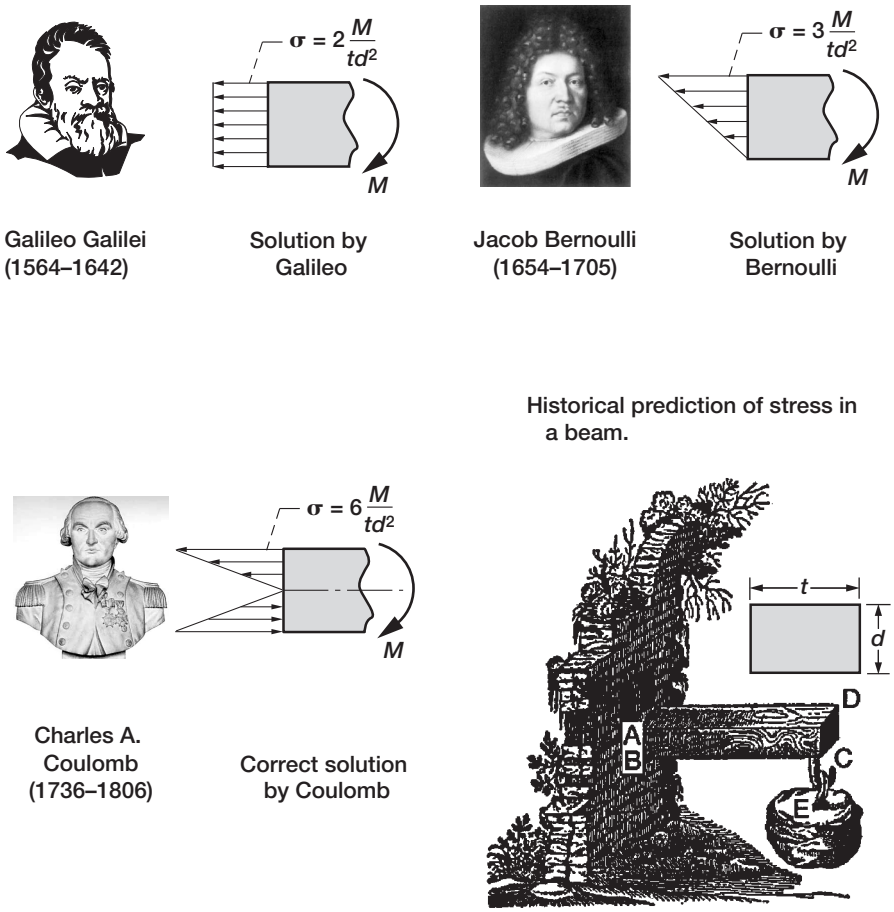

FIGURE 1-37 *Galileo's cantilever experiment conducted in 1632.*

and the compatibility conditions. The formulation of the compatibility conditions will be discussed in Chapter 6 of this book. The analysis of an indeterminate problem becomes straightforward when the compatibility conditions are fully understood and used. As it turned out, the compatibility conditions were not fully understood until recently, even though the theory of strength of materials dates back to the cantilever experiment of Galileo conducted in 1638 (the setup is shown in Fig. 1-37). Even though some of his calculations were underdeveloped, Galileo's genius is well reflected in the solution of the problem.

Historical predictions of stress (σ_A) at the root of the rectangular cantilever beam depicted in the experimental setup in Fig. 1-37 are as follows:

$$\textbf{\textit{Galileo's Solution:}} \quad \sigma_A = \frac{2M_A}{td^2} \tag{1-11a}$$

$$\textbf{\textit{Bernoulli's Formula:}} \quad \sigma_A = \frac{3M_A}{td^2} \tag{1-11b}$$

$$\textbf{\textit{Correct Coulomb's Solution:}} \quad \sigma_A = \frac{6M_A}{td^2} \tag{1-11c}$$

where t, d, and M_A are the beam thickness, depth, and moment at A, respectively.

The prediction by Galileo is one-third of the correct solution given by Coulomb. Bernoulli's solution is 50 percent accurate.

EXAMPLE 1-11

A wooden cantilevered beam (similar to the one shown in Fig. 1-37) has the following dimensions: length $\ell = 10\,\text{ft}$, depth $d = 6\,\text{in.}$, and thickness $t = 12\,\text{in}$. Calculate the stress at its base for a 1000-lbf gravity load applied at its free end using the formulas given by Galileo, Bernoulli, and Coulomb. Neglect the weight of the beam.

Moment M_A at the base of the cantilever (A in Fig. 1-37) is

$$M_A = -1000 \times (10 \times 12) = -120{,}000\,\text{in.-lbf}.$$

All three scientists recognized the stress and moment relationship to be $\sigma = k\frac{M}{td^2}$.

The value of the coefficient k differed between the scientists. For Galileo it was $k = 2$ and for Bernoulli it was $k = 3$. Finally, Coulomb correctly predicted it to be $k = 6$.

$$C = \frac{M_A}{td^2} = -\frac{120{,}000}{12 \times 6^2} = -277.78$$

$$\textbf{\textit{Galileo's Stress:}} \quad \sigma_G = \frac{2M_A}{td^2} = -555.26\,\text{psi}\ (-3.83\,\text{MPa})$$

$$\textbf{\textit{Bernoulli's Stress:}} \quad \sigma_B = \frac{3M_A}{td^2} = -833.33\,\text{psi}\ (-5.75\,\text{MPa})$$

$$\textbf{\textit{Coulomb's Stress:}} \quad \sigma_C = \frac{6M_A}{td^2} = -1666.67\,\text{psi}\ (-11.50\,\text{MPa})$$

EXAMPLE 1-12

Calculate the breaking load of the cantilevered beam in Example 1-11. Assume wood to break at a stress of $\sigma_B = 0.3$ ksi.

According to the three scientists, the load-carrying capacities of the beam ($P_{\max}$) are as follows:

$$P_{\max} = \frac{M}{\ell} = \frac{\sigma_B t d^2}{k\ell}$$

Galileo's stress formula expressed in terms of load becomes

$$P^G_{\max} = (\sigma_B \mathrm{t}\ \mathrm{d}^2)/2\ell = (0.3 \times 12 \times 6^2)/(2 \times 120) = 0.54\,\text{kip}$$

Bernoulli's prediction: $P^B_{\max} = 0.36\,\text{kip}$

Coulomb's prediction $= P^C_{\max} = 0.18\,\text{kip}$

The beam in Example 1-11 is likely to break when designed using the formula given by Galileo or Bernoulli because their predictions are nonconservative. They predict lower than actual stress.

Problems

Use material properties given in Appendix 5 to solve the problems.

1-1 Derive the dimensional formula of the quantities given in Table P1-1. Use SI base units of mass (M, kg), length (L, m), time (T, s), temperature (t, °C), and angle (θ, rad); and USCS

TABLE P1-1 Galileo's cantilever beam experiment conducted in 1632

Quantity	*Value (USCS Units)*	*Quantity*	*Value (USCS Units)*
Angle of twist, φ, deg	1.5	Poisson's ratio	0.3
Angular deformation, deg	1.0	Rotation, θ, deg	3
Area, A, in.^{2}	10	Shear modulus, ksi	3700
Axial deformation, in.	0.25	Strain, percent	0.06
Coefficient of thermal expansion, (10^{-6})/°F	6.6	Stress, psi	6000
Curvature, in.$^{-1}$	10^{-4}	Temperature, °F	100
Displacement, u, in.	1.0	Torque, T, ft-lbf	10,000
Force, F, lbf	1000	Volume, V, in.^{3}	100
Length, in.	150	Weight, lbf	1000
Mass, slug	1000	Weight density, lbf/ft^3	490
Mass density, slug/ft^3	15.2	Yield strength, ksi	20
Moment, M, ft-lbf	50,000	Young's modulus, ksi	10,000

base units of force (F, lbf), length (L, ft), time (T, s), temperature (t, °F), and angle (θ, $\theta°$). Convert the numerical values given in USCS units into SI units.

1-2 The two-bar aluminum truss shown in Fig. P1-2 has a span of 10 m and a height of 6 m. The cross-sectional areas of bars 1 and 2 are 800 and 1000 mm^2, respectively. The truss supports a 5-kN load at an inclination of 0.78 rad to the x-coordinate axis. The bar temperatures are 100 and 125°C, respectively. Convert the parameters of the problem into SI units and calculate its mass and weight.

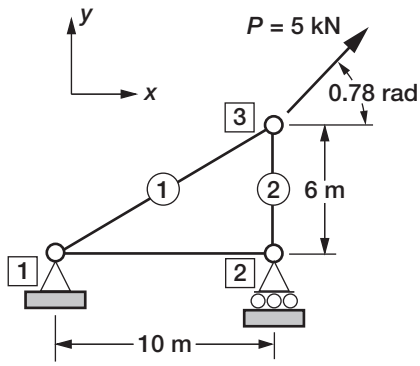

FIGURE P1-2

1-3 The uniform symmetrical steel cantilever beam shown in Fig. P1-3 supports two loads ($P_x = 1$ kN and $P_y = 10$ kN). The dimensions are marked in the figure. Calculate the mass, weight, and equivalent forces in the beam in USCS and SI units.

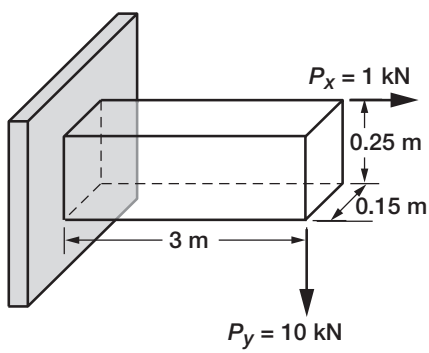

FIGURE P1-3

1-4 The displacements and rotations are measured at the top of a uniform concrete column at location A, as shown in Fig. P1-4. The column is 16 ft high and has a square cross-sectional area of 1 ft^2. Along the z-axis, the displacement is $w_A = 0.5$ cm; along the x-axis, it is $u_A = 1$ cm. Rotation about the y-axis is $\theta_A = 5°$; about the z-axis, it is $\varphi_A = 2°$. Calculate the deformations in the column.

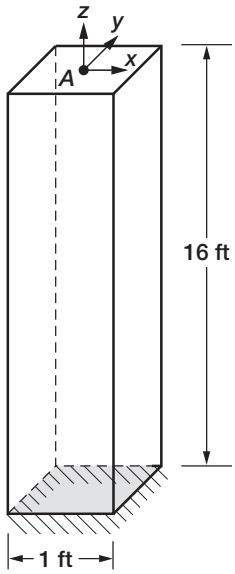

FIGURE P1-4

1-5 A one-cubic-meter piece of steel weighs 77 kN. Calculate its mass and weight densities in USCS and SI units.

1-6 Calculate the thermal deformation in the column of Problem 1-4 for a uniform variation in temperature of 75 K. Use both SI and USCS units.
(Thermal deformation = thermal strain × length.)

1-7 The two-bar truss shown in Fig. P1-7 has a height H and a bar inclination θ. Calculate the reactions R_x and R_y. Graph the reaction versus the angle θ in the range 90° to 0°.

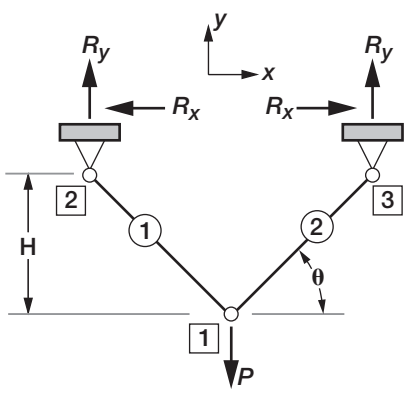

FIGURE P1-7

1-8 A square aluminum plate of area 625 mm^2 is subjected to a 1-ksi compressive stress along the y-direction (see Fig. P1-8). Calculate the induced strains.

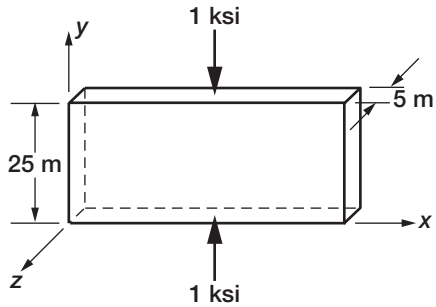

FIGURE P1-8

1-9 The deformed shape of an initially rectangular steel plate with 25- and 15-mm sides is shown in Fig. P1-9. Calculate the average strains in the plate.

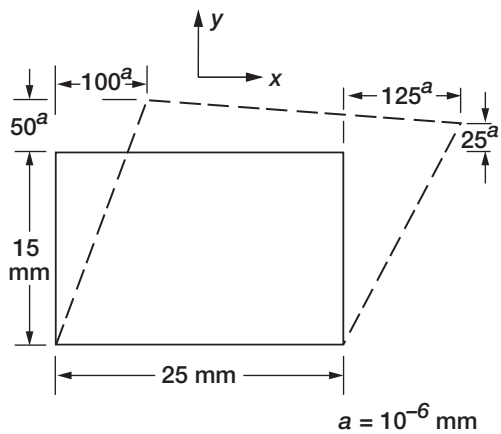

FIGURE P1-9

1-10 For the beam in Example 1-11, recalculate the stress when its orientation is changed by switching the depth and thickness and vice versa. Compare your answer to the solution in Example 1-11.

1-11 Calculate the breaking load of the cantilevered beam in Problem 1-10. Assume wood to break at a stress of $\sigma_b = 0.3$ ksi.

1-12 During a uniaxial tensile test conducted on the coupon shown in Fig. 1-25, the gauge length at a load step ($P = 2$ kN) expanded by 100 μ-in. along the load direction, while the lateral contraction was 5 μ-in. Calculate the properties of the coupon material.

2 Determinate Truss

A truss structure, or simply a truss made out of bar members, is the simplest of the five structure types listed in the first column of Table 1-1 of Chapter 1. A truss can be used in bridges, building roofs, transmission towers, helicopter bodies, and other applications. In practice, a truss is fabricated by connecting bars with rivets, bolts, or welds. For the purpose of analysis, the real connections are replaced by frictionless hinges or pin connections. This idealization makes the analysis simple, yet the error introduced is small. If required, the error can be quantified through an auxiliary calculation, referred to as a "secondary stress" analysis. The truss shown in Fig. 2-1 is made of nine bars (which are circled) and six joints, also referred to as nodes (shown in boxes). The connections at nodes 1 to 3, which are shown by solid lines, represent the real joints. Idealized pin connections are shown for nodes 4 to 6. Truss analysis treats all joints (1 to 6) as pin connections. A truss that can be analyzed for the bar forces only through an application of the equilibrium equation is called a determinate truss, and this chapter is devoted to its analysis. The technique developed for the analysis of the determinate truss, with some modifications, can be used to analyze other structure types.

2.1 Bar Member

The bar shown in Fig. 2-2*a* is a straight structural member with a length ℓ and a uniform cross-sectional area A. The shape of the cross section is not relevant. It can be circular, annular, rectangular, angular, or of any other shape, as shown in Fig. 2-2*b*. It is a slender member because its cross-sectional area is small compared with its length. The slenderness ratio ($SR = \ell/A$) is defined as the ratio of its length ℓ to its cross-sectional area A. A slenderness ratio greater than 20 ($SR \geq 20$) is typical. For analysis, a bar is represented by its centerline, which is also considered as the x-coordinate axis, and it passes through the

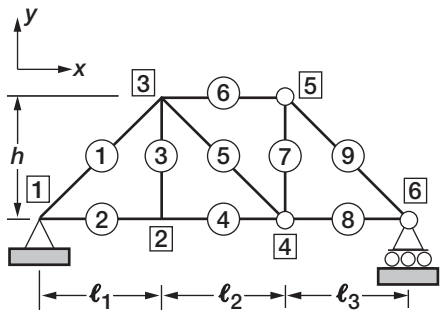

FIGURE 2-1 *Six-node, nine-bar truss. Real joints, nodes 1, 2, and 3; idealized pin connection, nodes 4, 5, and 6.*

centroid of its uniform area. A bar can be made of steel, aluminum, wood, or any other type of structural material. Its analysis requires the Young's modulus E and the coefficient of thermal expansion α of the material. A bar member is sketched by a line segment joining its two nodes, 1 and 2, as shown in Fig. 2-2*c*. Node 1 is considered as the origin of the x-coordinate axis. The quantities required for its analysis are length ℓ, area A, modulus E, density ρ, and coefficient of thermal expansion α.

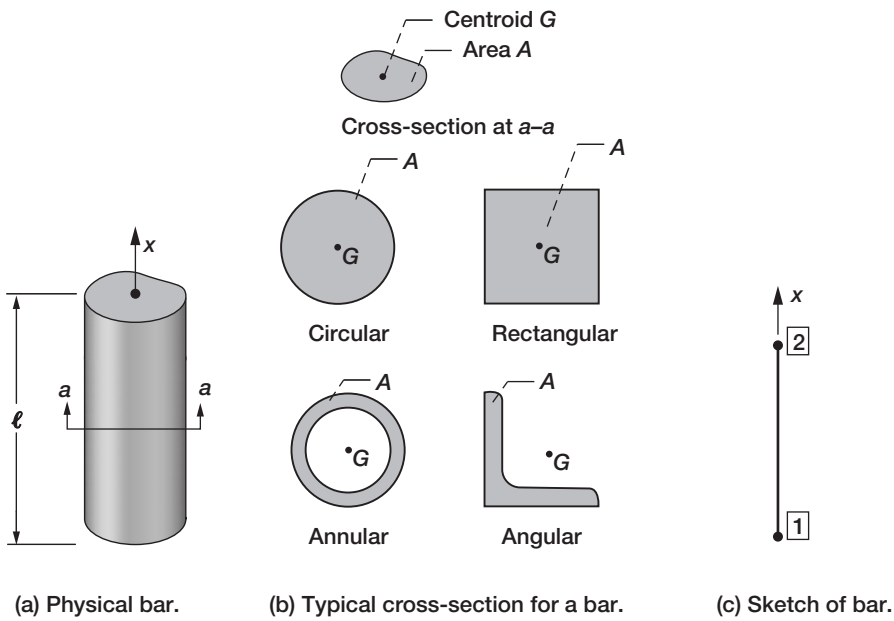

FIGURE 2-2 *Bar member.*

Force Analysis in a Bar

A bar can resist only an external axial load P that must be applied along the x-coordinate axis. It resists the load by inducing an internal force F that also acts along the x-coordinate axis. Consider a bar of length ℓ, area A, modulus E, density ρ, and coefficient of thermal expansion α that is hinged to a ceiling at node 1 and is free at node 2, as shown in Fig. 2-3*a*. The hinged node represents the foundation or support. The free node 2 is subjected to an external load P. The problem is to determine the induced internal force F in the bar. Consider

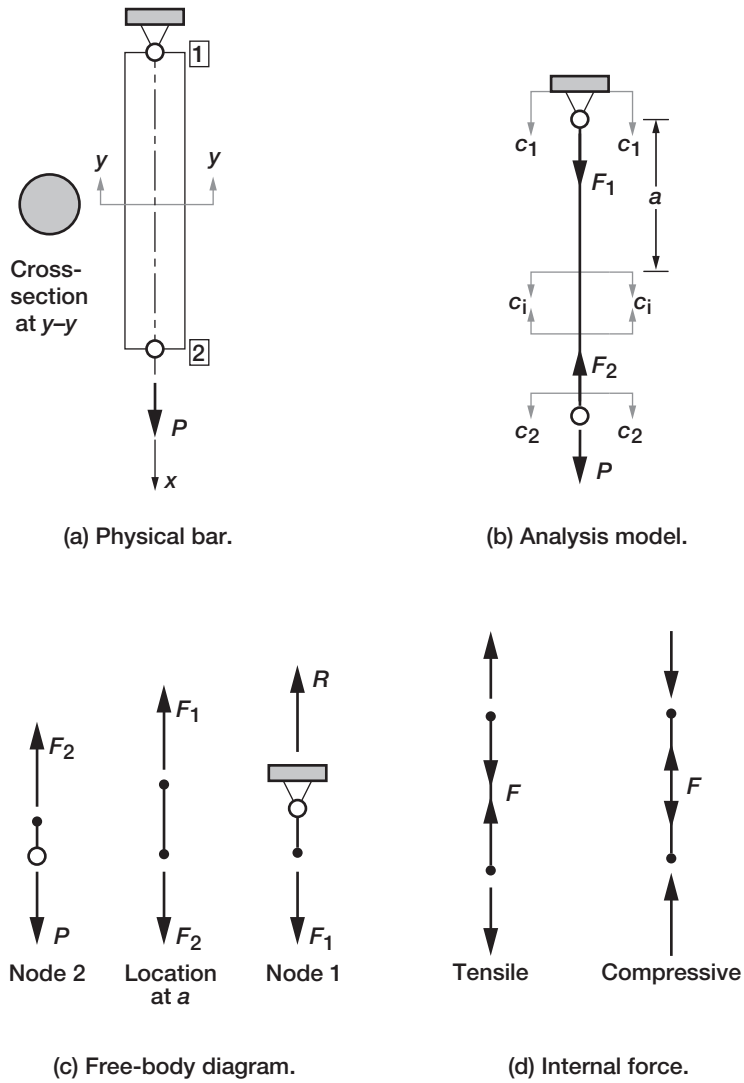

FIGURE 2-3 *Force analysis of a bar.*

node 1 as the origin and the x-coordinate direction from node 1 to node 2. The line diagram, or the analysis model, of the bar is depicted in Fig. 2-3b. The solution is obtained by employing the concept of a **free-body diagram**. Such a diagram can be constructed in three steps:

Step 1—Free Body

A free body is a sketch of a small portion that is isolated from the rest of the bar member. A small portion can be isolated at any location in the bar. It can be at the origin, at node 2, or at an intermediate location at a distance a as shown in Fig. 2-3b.

Step 2—Mark Forces

Consider the free body at node 2, which is obtained by cutting the bar at c_2–c_2 just above node 2, as shown in Fig. 2-3c. It is subject to the given load P and an unknown internal force F_2. The x-coordinate axis is the line of action of both forces P and F_2.

Step 3—Establish Equilibrium

A free body must be in equilibrium. Equilibrium is satisfied when the algebraic sum of all forces along the x-coordinate direction is zero.

$$\sum_x F = 0$$

$$P - F_2 = 0, \quad \text{or} \quad F_2 = P \tag{2-1a}$$

The internal force F_2 at node 2 is equal to the load P. Repeat the three steps for a free body at an intermediate location.

Step 1—Free Body

A free body is isolated for an intermediate location at an arbitrary distance a from node 1 by cutting the bar at c_i–c_i as shown in Fig. 2-3c.

Step 2—Mark Forces

The free body has two forces, F_1 and F_2. From Eq. (2-1a), $F_2 = P$.

Step 3—Establish Equilibrium

Equilibrium along the x-coordinate direction yields

$$F_2 - F_1 = 0$$

$$\text{or} \quad F_1 = F_2 = P \tag{2-1b}$$

The internal forces are equal ($F_1 = F_2$). Repeat the three steps for a free-body diagram at the support node 1.

Step 1—Free Body

A free body at node 1 is isolated by cutting the bar at c_i–c_i as shown in Fig. 2-3c.

Step 2—Mark Forces

The two forces are F_1 and an unknown reactive force R.

Step 3—Establish Equilibrium

The EE along the x-direction yields

$$F_1 - R = 0$$

$$\text{or} \quad F_1 = R = P \tag{2-1c}$$

The force solution for the bar is obtained as

$$F_1 = F_2 = F = R = P \tag{2-1d}$$

Forces F_1 and F_2, are called the internal forces because these forces are internal to the body of the bar member. These forces are designated by the letter F. The applied load is also a force, but it is external to the body of the bar and is designated by the letter P. The reaction is the force induced at the support; it is designated by the letter R. For the bar member, the internal force is equal to the external load, which is also equal to the reaction.

Positive Direction for Forces

The external load and the reaction follow the n-sign convention. These are positive when directed along the positive x-coordinate axis. The external load P is positive, whereas the reaction is negative (see Fig. 2-3*c*). The induced reaction is opposite to the direction of load.

The internal force F follows the t-sign convention. It is positive when it is tensile, which stretches or elongates the bar. It is shown by a pair of arrowheads that point at each other as in Fig. 2-3*d*. It is negative when it is a compressive force, which shortens or contracts the bar. A compressive force is shown by a pair of arrowheads that point in opposite directions as in Fig. 2-3*d*. The force analysis of the bar is independent of its length, area, density, modulus, or coefficient of expansion.

Interface Forces

A free-body diagram created by cutting a member exposes an interface. For example, the structure shown in Fig. 2-4*a* is cut at *a–a* to create an interface. The forces at the interface must be in equilibrium. This mandatory condition is satisfied by changing the direction of the forces acting at the left and right sections of the interface. If the left section is subjected to a force F directed along the positive x-coordinate axis, then the right section must be subjected to an equal magnitude force but applied along the negative x-coordinate axis, as shown in Fig. 2-4*b*. The force in the left section can be considered as the action, whereas the force in the right section is the reaction; and we know that action = reaction. A reverse orientation for the interface forces, as shown in Fig. 2-4*c*, is valid. The interface forces marked in Fig. 2-4*d* are not admissible because equilibrium is violated. The shear force at the interface in Fig. 2-4*e* is admissible, but the moment as marked in Fig. 2-4*f* is not admissible. Moment and torque at interfaces in Figs. 2-4*g* and 2-4*h* are admissible. The axial force F, the shear force V, and the moment M at the interface, shown in Fig. 2-4*i*, are admissible.

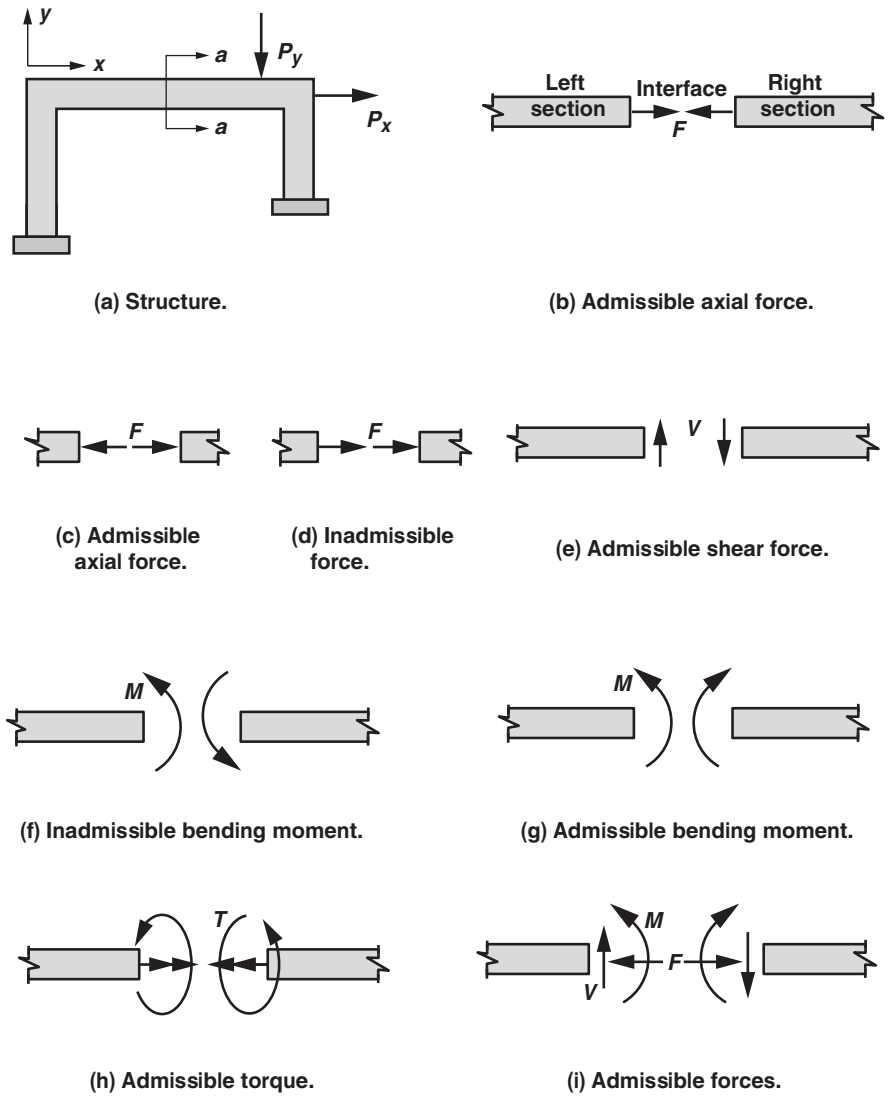

FIGURE 2-4 *Forces at an interface.*

Force Analysis of a Composite Bar

A composite bar made of two members is suspended from a ceiling as shown in Fig. 2-5*a*. Bar 1, made of steel with Young's modulus $E_s = 30{,}000$ ksi, is ℓ_1 in. long and has a solid cross-sectional area A_1. Bar 2, made of aluminum with modulus $E_a = 10{,}000$ ksi, is ℓ_2 in. long and has an annular cross-sectional area A_2. It is subjected to a P_1 kip load at the interface and a P_2 kip load at its end. Determine the internal force in each bar and the reaction at the support.

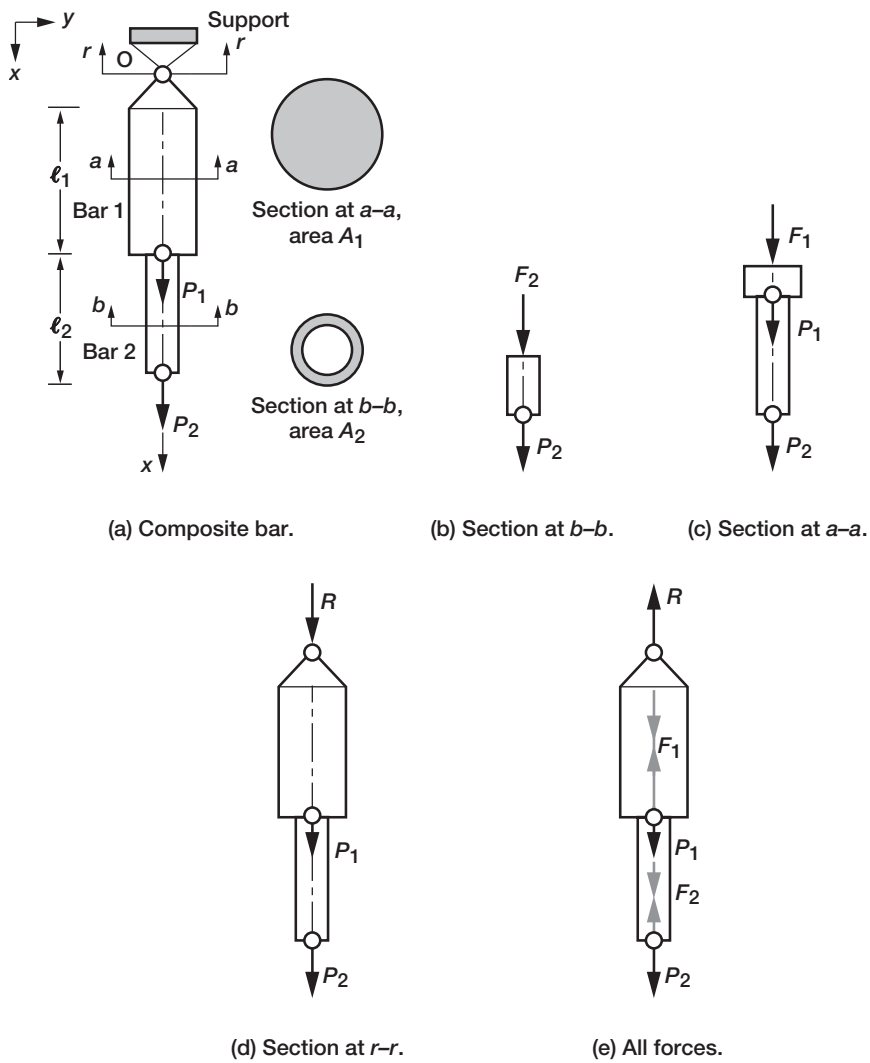

FIGURE 2-5 *Analysis of a composite bar.*

A concept called the **method of section** is introduced through the composite bar. The three steps of this method are explained by considering bar 2 as an example.

Step 1—Take a Section

Take a section at any location along the length of bar 2, such as at *b–b*. Separate the free body as shown in Fig. 2-5*b*.

Step 2—Mark Forces

The forces that are marked on the free body are the external load (P_2) and the bar force (F_2).

Step 3—Establish Equilibrium
Equilibrium is established by writing the EE along the x-coordinate direction.

$$\sum_x F = 0$$

$$P_2 + F_2 = 0, \quad \text{or} \quad F_2 = -P_2 \tag{2-2a}$$

In magnitude, the internal force (F_2) is equal to the load (P_2), but its direction is opposite to the load, or along the negative x-coordinate axis. To calculate the force in bar 1, we take a section at a–a and repeat the three steps.

Step 1—Take a Section
Take a section at a–a, and separate the portion shown in Fig. 2-5c.

Step 2—Mark Forces
Mark the three forces: loads P_1 and P_2 and the bar force F_1.

Step 3—Establish Equilibrium
The EE along the x-coordinate direction yield

$$P_2 + P_1 + F_1 = 0$$
$$\text{or} \quad F_1 = -(P_1 + P_2) \tag{2-2b}$$

In magnitude, the internal force in bar 1 is equal to the sum of the two loads, but it acts along the negative x-coordinate direction. To calculate the reaction, we take a section at r–r and repeat the three steps.

Step 1—Take a Section
Take a section at r–r and separate the portion shown in Fig. 2-5d.

Step 2—Mark Forces
There are three forces: loads P_1 and P_2 and the reaction R.

Step 3—Establish Equilibrium
The EE along the x-coordinate direction yield

$$R + P_1 + P_2 = 0$$
$$\text{or} \quad R = -(P_1 + P_2) \tag{2-2c}$$

In magnitude, the reaction is equal to the sum of the two loads, but it acts along the negative x-coordinate direction. The bar forces, loads, and reaction are shown with the correct directions in Fig. 2-5e. The reaction (R) is in equilibrium with the loads (P_1 and P_2). Both bar forces (F_1 and F_2) are tensile and are independent of materials and cross-sectional areas.

Force Analysis of a Tapered Bar

The frustum of a cone or a tapered bar made of steel with Young's modulus $E_s = 30{,}000$ ksi, weight density $\rho_w = 0.289$ lbf/in.^{3}, and length $\ell = 60$ in. is suspended from a ceiling as shown in Fig. 2-6*a*. It has a solid cross-sectional area A. The minimum (d_1) and maximum (d_2) diameters of the frustum are 2 in. and 4 in., respectively. The bar is subjected to an external load P of 5 kip at its free end. Determine the internal force in the bar and the reaction at the support without neglecting the self-weight of the structure. The x-coordinate axis is selected along the bar centerline with its origin at the support. The three steps of the method of section yield the force analysis of the bar.

Step 1—Take a Section

The bar is cut at *a–a* at a distance x from the support. The lower portion of the bar is shown in Fig. 2-6*b*. The bar diameter $d(x)$ at the location x can be calculated as

$$d(x) = 2 + \left(\frac{4-2}{60}\right)x = 2 + \frac{x}{30} \tag{2-3a}$$

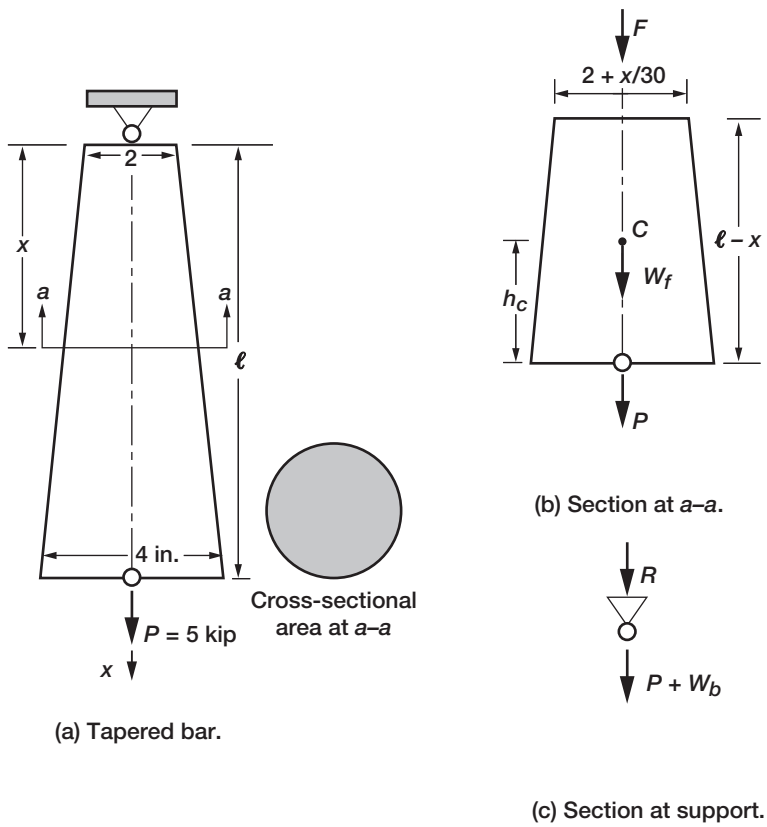

FIGURE 2-6 *Analysis of a tapered bar.*

The volume (V) of the frustum of a cone with diameters d_1 and d_2 and height h is given by the formulas

$$V = \frac{\pi h}{12}\left(d_1^2 + d_2^2 + d_1 d_2\right) \tag{2-3b}$$

The volume of the frustum (V_f) of the cone shown in Fig. 2-6*b* is obtained by substituting for $d_1 = 2 + x/30$, $d_2 = 4$, and $h = 6\ell - x$.

$$V_f = \frac{\pi}{12}(\ell - x)\left\{\left(2 + \frac{x}{30}\right)^2 + 4^2 + 4\left(2 + \frac{x}{30}\right)\right\}$$

$$\text{or} \quad V_f = \frac{\pi(\ell - x)}{12}\left(\frac{x^2}{900} + \frac{4x}{15} + 28\right) \tag{2-3c}$$

The weight (W_f) of the frustum is obtained as the product of volume and density (ρ)

$$W_f = \rho V_f = \frac{\pi \rho_w (\ell - x)}{12}\left(\frac{x^2}{900} + \frac{4x}{15} + 28\right) \tag{2-3d}$$

The weight acts at the centroid, which is located on the x-coordinate axis at a distance h_c from the bigger base.

$$h_c = \left(\frac{(\ell - x)}{4}\right)\left(\frac{1 + 2k + 3k^2}{1 + k + k^2}\right) \tag{2-3e}$$

$$k = \frac{d_2}{d_1} = \frac{4}{\left(2 + \frac{x}{30}\right)}$$

The centroidal height (h_c) given by Eq. (2-3*e*) is given for information but not used in our calculations.

Step 2—Mark Forces

It is subjected to three forces: the external force P, weight W_f, and internal force F, as marked in Fig. 2-6*b*.

Step 3—Establish Equilibrium

The equilibrium of the forces along the x-direction yields

$$P + W_f + F = 0$$

$$\text{or} \quad F = -\left(P + W_f\right) = -\left\{P + \frac{\pi \rho_w (\ell - x)}{12}\left(\frac{x^2}{900} + \frac{4x}{15} + 28\right)\right\} \tag{2-3f}$$

The direction of the internal force F is opposite to the direction of load P and weight W_f. If the weight is neglected, then the internal force F and the load P become equal in magnitude but opposite in sign ($F = -P$).

Calculation of Reaction

The three steps are repeated to calculate the reaction for a section taken at the support.

Step 1—Take a Section

Cut the bar at the support as shown in Fig. 2-6*c*.

Step 2—Mark Forces

The section is subjected to three forces: the reaction (R), the weight of bar (W_b), and the external load P.

$$W_b = \rho_w V_b \tag{2-3g}$$

The volume of bar (V_b) is

$$V_b = \frac{60\pi}{12}\left(2^2 + 4^2 + 2 \times 4\right) = 439.82\,\text{in.}^3 \tag{2-3h}$$

$$W_b = \rho_b V_b = 439.82 \times 0.289 = 127.11\,\text{lbf} \tag{2-3i}$$

Step 3—Establish Equilibrium

The equilibrium equation along the x-coordinate direction yields

$$R + P + W_b = 0 \tag{2-3j}$$

$$\text{or} \quad R = -(P + W_b) = -(5000 + 127.11) = -5127.11\,\text{lbf} \tag{2-3k}$$

The direction of the reaction is along the negative x-coordinate axis. If the weight of the bar is neglected, then the reaction is $R = -5000\,\text{lb}$, and it has a 2.54 percent error.

EXAMPLE 2-1: Analysis of an Octahedral Bar

A regular octahedral bar made of steel is suspended from a ceiling as shown in Fig. 2-7*a* and *b*. It is 2 m long and its perimeter is 80 cm. Calculate the internal force and reaction for the following cases:

1. Load ($P = 10\,\text{kN}$) applied at the center of gravity; neglect bar weight
2. Weight only
3. Combined action of load and weight

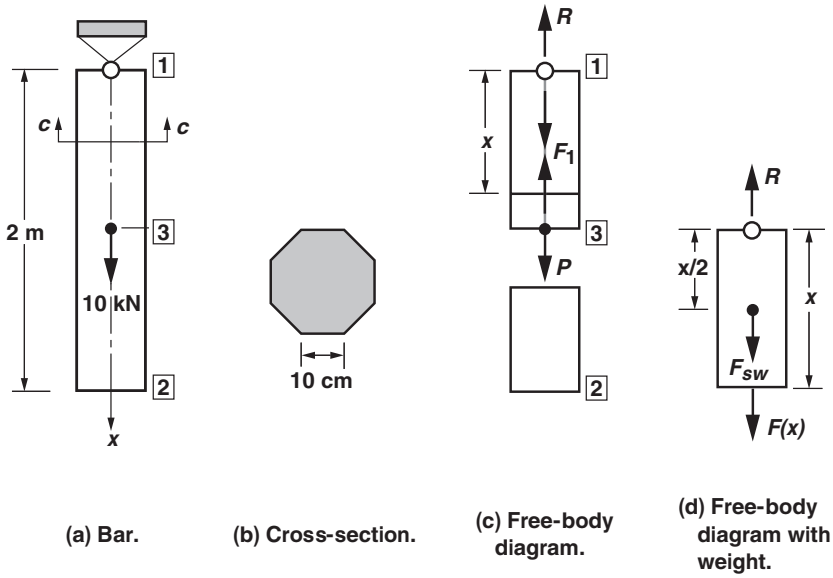

FIGURE 2-7 *Analysis of an octahedral bar.*

Solution

The external load is applied along the bar axis, which is also considered as the x-coordinate axis. The bar is modeled by three nodes: node 1 is the support, node 2 is the free node, and node 3 is the centroid. The free-body diagram for the first load case is shown in Fig. 2-7c.

Load Case 1

The reaction (R) is equal to the applied load (P).

$$R = P = 10\,\text{kN} \tag{a}$$

Internal Force

Along the segment 0 to 1 m, the internal force (F) is equal to the applied load (P).

$$\text{For,} \quad 0 \le x \le 1\,\text{m}, \quad F = P = 10\,\text{kN} \tag{b}$$

The span segment 1 to 2 m is free of internal force.

$$\text{For,} \quad 1\,\text{m} \le x \le 2\,\text{m}, \quad F = 0 \tag{c}$$

Load Case 2

Consider a section x from node 1. The forces are marked in Fig. 2-7d. The self-weight (F_{sw}) is equal to the product of the weight density of steel (ρ_s) and volume (V).

$$F_{sw} = \rho_s V$$

$$V = xA \tag{d}$$

The area of a regular polygon with n sides with length of side s is given by the formula.

$$A_p = \frac{1}{4} n s^2 \cot\left(\frac{180^\circ}{n}\right) \tag{e}$$

$$\text{here,} \quad s = \frac{\text{perimeter}}{\text{number of side}} = \frac{p}{n}$$

For an octagon, $s = \dfrac{80}{8} = 10\,\text{cm}$

$$A = A_{p=8} = 4.828\,\text{s}^2 = 483\,\text{cm}^2 = 4.83 \times 10^{-2}\,\text{m}^2$$

$$V = 4.83 \times 10^{-2} x$$

Weight density of steel: $\rho_s = 77\,\text{kN/m}^3$

$$F_{sw} = \rho_s V = 77 \times 4.83 \times 10^{-2} x = 3.72x\,\text{kN} \tag{f}$$

Total Weight (W) of the bar ($x = \ell = 2\,\text{m}$)

$$W = 3.72 \times 2 = 7.44\,\text{kN}$$

$$R = W = 7.44\,\text{kN} \tag{g}$$

The EE for the free-body diagram shown in Fig. 2-7d yields

$$F(x) + F_{sw} - R = 0$$

$$F(x) = R - F_{sw}$$

$$F(x) = 7.44 - 3.72x \tag{h}$$

$$\text{At node 1} \quad F(x = 0) = 7.44\,\text{kN}$$

$$\text{node 2} \quad F(x = 2\,\text{m}) = 0$$

$$\text{node 3} \quad F(x = 1\,\text{m}) = 3.72\,\text{kN}$$

Load Case 3
Solution to load case 3 is obtained by adding the responses of the two cases.

$$\text{Reaction:} \quad R = P + W = 17.44\,\text{kN}$$

Internal Force
Along the segment 0 to 1 m, the internal force (F) is

$$\text{For,} \quad 0 < x < 1\,\text{m}, \; F = 17.44 - 3.72x \tag{i}$$

In the span segment from 1 to 2 m,

$$\text{For,} \quad 1\,\text{m} < x < 2\,\text{m}, \; F = 7.44 - 3.72x$$

$$\text{At node1} \quad F(x = 0) = 17.44 \text{ (equal to the reaction } R)$$

$$\text{node 3} \quad F(x = 1\,\text{m}) = 13.72\,\text{kN}$$

$$\text{node 2} \quad F(x = 2\,\text{m}) = 0 \text{ (free end)} \tag{j}$$

The internal force peaks at the support at $F = 17.44\,\text{kN}$. The free end has no internal force.

2.2 Stress in a Bar Member

Stress is defined as the intensity of force per unit area. There are two types of stress: normal stress and shear stress. Shear stress is neglected in a bar member. Only one normal stress is induced in a bar member, and it is designated by the Greek letter sigma (σ). Consider a symmetrical elastic solid subject to an external load (P) that passes along the line of symmetry, which is also considered as the x-coordinate axis, as shown in Fig. 2-8a. Take a section (a_1–a_2–a_3–a_4) in the y–z plane of symmetry. A separated portion of the solid is shown in Fig. 2-8b. The external load (P) must be balanced by an internal force (F) that is normal to the cut section. It is further assumed that F is the only internal force and that it is directed along the x-coordinate axis. The force (F) represents the sum (or resultant) of all forces in the cut section. It need not be distributed uniformly across the section, but it can vary as shown in Fig. 2-8c. Divide the section by a grid to create n number of elemental areas ($\Delta A_1, \Delta A_2, \ldots, \Delta A_n$). Let ΔF_i represent the force on area ΔA_i, as shown in Fig. 2-8d. The sum of all the distributed forces (ΔF_i) is equal to the internal force (F).

$$F = \sum_{i=1}^{n} \Delta F_i \tag{2-4a}$$

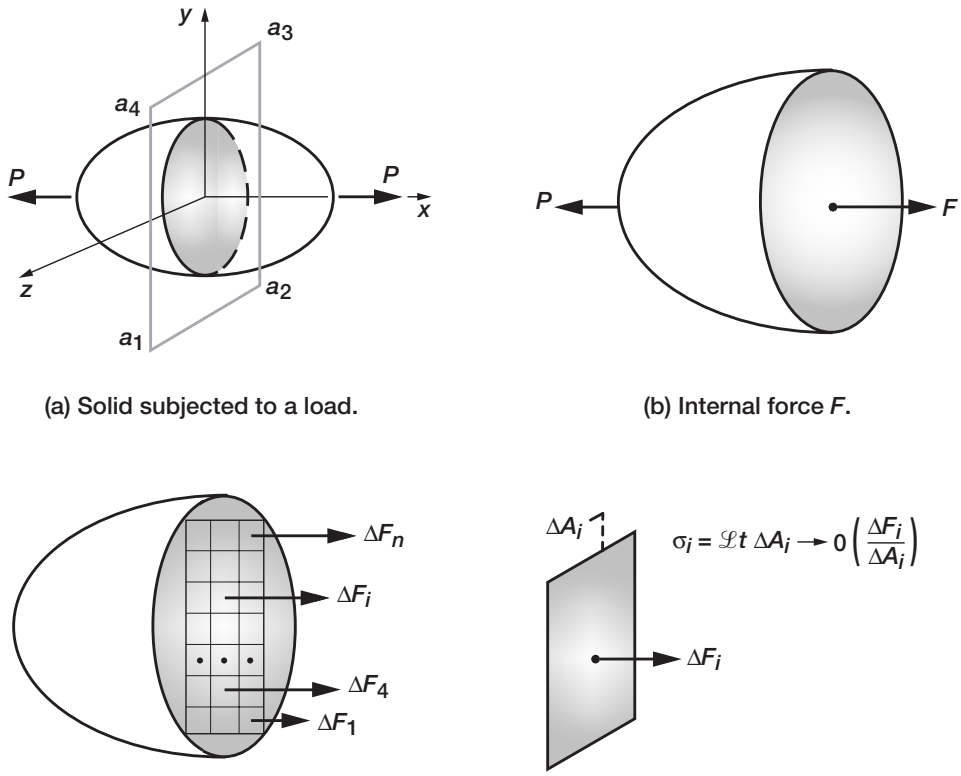

(a) Solid subjected to a load.

(b) Internal force F.

(c) Distribution of internal force.

(d) Force on an elemental area.

FIGURE 2-8 *Normal stress.*

The direction of the force (ΔF_i) is normal to the elemental area (ΔA_i). In other words, the direction of the normal to the elemental area is also the direction of the force. Stress (σ_i) at location i is defined as the ratio of the force (ΔF_i) to the area (ΔA_i) in the limit as ΔA_i approaches zero.

$$\sigma_i = \mathcal{L}t(\Delta A_i \to 0)\left(\frac{\Delta F_i}{\Delta A_i}\right) \tag{2-4b}$$

In a bar member, it is assumed that the normal stress is uniform across its cross-sectional area. This assumption simplifies Eq. (2-4b) to

$$\sigma = \sigma_{\text{average}} = \frac{F}{A} = \frac{P}{A} \tag{2-4c}$$

This simple formula ($\sigma = F/A$) is adequate for the analysis of bar and truss structures. The attributes of stress (σ) follow:

1. The stress is normal to the section a_1–a_2–a_3–a_4, which lies in the y–z plane of symmetry. The stress is directed along the x-coordinate axis. In advanced solid mechanics, it is designated with the subscript x as σ_x that represents the x-coordinate axis. Because we deal with a single stress component, the subscript x is dropped.
2. A general solid mechanics problem has six stress components. In truss analysis, five of the six stress components are set to zero.
3. Normal stress is the intensity of internal force. It is directed along the x-coordinate axis. It is perpendicular to the cross-sectional area that lies in the y–z plane.
4. The dimension of stress is force divided by area ($\sigma = F/A = F/L^{-2} = ML^{-1}T^{-2}$). Stress in USCS units is measured in pound-force per square inch (psi) or in units of ksi, which are 1000 psi (1 ksi = 1000 psi). Stress in SI units is measured in pascal (Pa), which is one newton force per one square meter area. In engineering, stress is measured in units of megapascal (MPa), which is one million pascals ($1\,\text{MPa} = 10^6\,\text{Pa}$), because one Pa is a very small stress. Conversion between the two systems to measure stress is given in Table 1-3.
5. The magnitude of stress is a big number like 20,000 psi, 138.8 million Pa, or 138.8 MPa.

EXAMPLE 2-2: Stress in an Octahedral Bar

Calculate stress in the octahedral bar of Example 2-1 for each of the three load cases.

Solution

Stress is obtained as the ratio of the internal force to the cross-sectional area ($\sigma = F/A$). The bar has a uniform area ($A = 4.83 \times 10^{-2}\,\text{m}^2$).

Load Case 1—Stress in the Segment 0 to 1 m

$$\sigma = \frac{10\,\text{kN}}{4.83 \times 10^{-2}\,\text{m}^2} = 207\,\text{kPa}$$

For, $1\,\text{m} \leq x \leq 2\,\text{m}$

$$\sigma = 0$$

Load Case 2

For, $0 \leq x \leq 2\,\text{m}$,

$$\sigma(x) = \frac{7.44 - 3.72x}{4.83 \times 10^{-2}} = (154 - 77x)\,\text{kPa}$$

Load Case 3

For, $0 \leq x \leq 1$ m,

$$\sigma(x) = (361 - 77x)\,\text{kPa}$$

For, $1\,\text{m} \leq x \leq 2\,\text{m}$,

$$\sigma(x) = (154 - 77x)\,\text{kPa}$$

Sign Convention for Stress

Stress follows the t-sign convention. Consider the stress on a rectangular bar member that is subjected to a tensile load (P) as shown in Fig. 2-9a. Select an elemental section of length $\Delta\ell$, shown separately in Fig. 2-9b. In the right side of the block, the direction of the stress σ^r is along the positive x-coordinate axis, whereas in the left side, stress σ^ℓ is along the negative x-coordinate axis. Both σ^ℓ and σ^r are positive stresses because tension is induced in the block. The sign of stress is determined as the product of two factors: the first pertains to the normal (n) to the area, and the second is the direction (f) of stress.

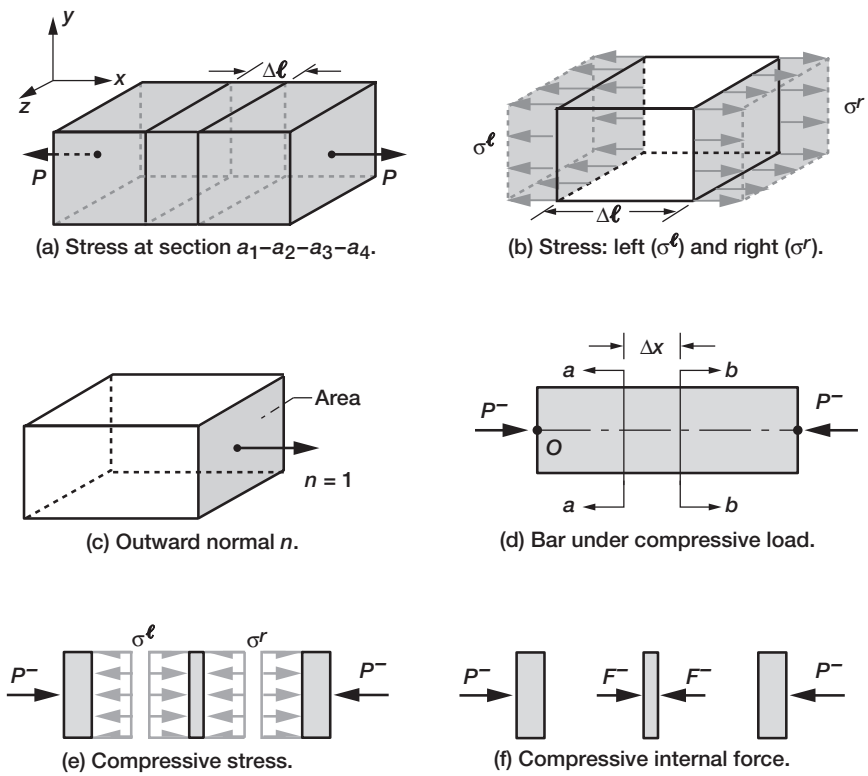

FIGURE 2-9 *Normal stress in a bar.*

The orientation of an area is positive ($n = 1$) if an outward normal drawn to the area is directed along the positive coordinate axis, as shown in Fig. 2-9*c*. The direction of stress is positive ($f = 1$) when directed along the positive coordinate axis. Stress is positive when the product (nf) is positive.

Consider the stress (σ^ℓ). The orientation of the area is negative ($n = -1$), and the stress (σ^ℓ) is directed along the negative x-axis ($f = -1$). The product ($nf = -1 \times -1 = 1$) is positive, or the stress (σ^ℓ) is positive. For the stress (σ^r), $n = 1$ and $f = 1$. The product ($nf = 1$) is positive, or the stress (σ^r) is positive. A positive stress is also called a tensile stress. Negative stress induces compression.

Consider next a bar that is subjected to a load (P^-) applied along the negative x-coordinate axis, as shown in Fig. 2-9*d*. The free-body diagrams depicting stress and internal force are shown in Figs. 2-9*e* and 2-9*f*, respectively. The elemental section is subjected to a stress ($\sigma^r = P^-/A$).

The stress is compressive because for stress σ^r, the orientation of the area is negative ($n = -1$), but the stress is directed along the positive x-coordinate axis ($f = 1$), and their product ($nf = -1$) is negative. The same section is subjected to negative internal force ($F^- = P^-$) as shown in Fig. 2-9*f*. Internal force also follows the t-sign convention. It is easy to observe that the elemental section has a tendency to contract, inducing compressive stress. The force (F^-) is also compressive. A negative internal force is called a compressive force.

2.3 Displacement in a Bar Member

A bar member in the x–y plane, with an orientation θ, and nodes 1 and 2, is shown in Fig. 2-10*a*. Each node can displace along the x- and y-coordinate directions. At node 1, the displacement along the x-coordinate axis is u_1, and it is v_1 along the y-coordinate axis. Likewise, its displacements at node 2 are u_2 and v_2. Consider a new set of orthogonal coordinate axes x^ℓ and y^ℓ, as marked in Fig. 2-10*b*. In this system, the x^ℓ-coordinate axis is along the length of the bar, and the y^ℓ-axis is perpendicular to it.

Resolve the displacement components (u_1, v_1 and u_2, v_2) to obtain equivalent displacements (u_1^a, v_1^t, u_2^a, v_2^t) in the (x^ℓ, y^ℓ) system.

$$
\begin{aligned}
u_1^a &= u_1 \cos\theta + v_1 \sin\theta \\
u_2^a &= u_2 \cos\theta + v_2 \sin\theta \\
v_1^t &= -u_1 \sin\theta + v_1 \cos\theta \\
v_2^t &= -u_2 \sin\theta + v_2 \cos\theta
\end{aligned}
\tag{2-5}
$$

The displacement components (u_1^a and u_2^a) are along the bar axis (x^ℓ), whereas the components (v_1^t and u_2^t) are along the perpendicular y^ℓ-axis. It is important to observe that the displacement components along the bar axis (u_1^a and u_2^a) induce stress in the bar. No stress

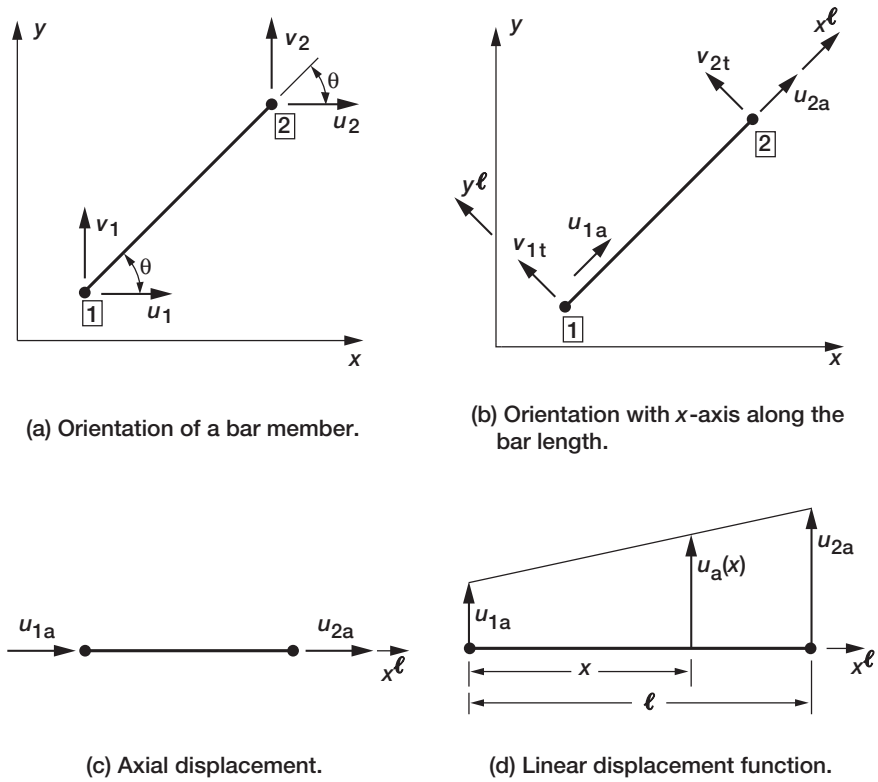

(a) Orientation of a bar member.

(b) Orientation with x-axis along the bar length.

(c) Axial displacement.

(d) Linear displacement function.

FIGURE 2-10 *Displacement in a bar member.*

is induced by the two transverse components (v_1^t and v_2^t). In other words, a bar has four displacement degrees of freedom, but stress is induced only by the two axial displacement components.

The nodal displacements (u_1^a and u_2^a) at nodes 1 and 2 are assumed to be distributed linearly along the bar length, as shown in Fig. 2-10*d*. The displacement function is

$$u_a(x^\ell) = u_{1a}\left(1 - \frac{x^\ell}{\ell}\right) + u_{2a}\left(\frac{x^\ell}{\ell}\right) \tag{2-6a}$$

The displacements at the nodes of the bar are obtained as

$$u(x^\ell = 0) = u_{1a} \tag{2-6b}$$

$$u(x^\ell = \ell) = u_{2a} \tag{2-6c}$$

The displacement has the dimension of length. In USCS units, it is measured in inches, and in SI units, it can be measured in centimeters or millimeters. Displacements are small quantities, in magnitude ranging from a fraction of an inch to a few inches.

2.4 Deformation in a Bar Member

Deformation (β) is a measure of relative displacement. In a bar it is a measure of the relative axial displacements at two neighboring locations in the member. Consider the locations: (1) at x and (2) at $x + \Delta x$, as shown in Fig. 2-11. The deformation β is the relative displacement across the differential length (Δx).

$$\beta(x) = u_a(x + \Delta x) - u_a(x) \tag{2-7a}$$

The deformation is expressed in nodal displacements using the function given by Eq. (2-6a).

$$\beta(x) = \left\{u_{1a}\left(1 - \frac{x + \Delta x}{\ell}\right) + u_{2a}\left(\frac{x + \Delta x}{\ell}\right)\right\} - \left\{u_{1a}\left(1 - \frac{x}{\ell}\right) + u_{2a}\left(\frac{x}{\ell}\right)\right\}$$

$$\text{or} \quad \beta(x) = (u_{2a} - u_{1a})\left(\frac{\Delta x}{\ell}\right) \tag{2-7b}$$

The deformation (β) across the entire length ($\Delta x = \ell$) of the bar is equal to the relative displacement of its nodes:

$$\beta = (u_{2a} - u_{1a}) \tag{2-7c}$$

Deformation is the expansion of the bar length when it is stretched by a tensile force. It is the contraction when the bar length is shortened by a compressive force. Deformation is positive when a bar expands, and it is negative when it contracts. Bar deformation has the dimension of displacement. It has the unit of length and can be measured in inches in USCS units or in centimeters or millimeters in SI units. Appropriate use of deformation, which is sometimes overlooked in strength of materials calculations, can systematize the subject.

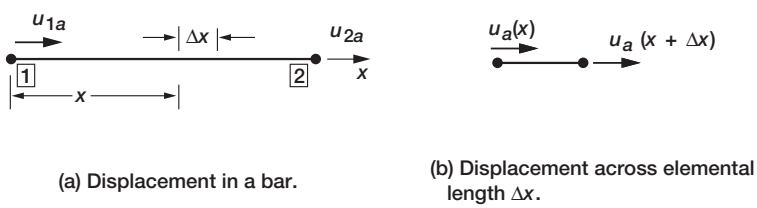

FIGURE 2-11 *Deformation in a bar.*

2.5 Strain in a Bar Member

Strain (ε) is the intensity of deformation. A bar member has one normal strain component along its axis. This normal strain designated by the Greek letter epsilon (ε) is defined as

$$\varepsilon(x) = \varepsilon = \frac{\beta(x)}{\Delta x} = \left(\frac{u_{2a} - u_{1a}}{\ell}\right)\left(\frac{\Delta x}{\Delta x}\right) = \frac{u_{2a} - u_{1a}}{\ell} \tag{2-8a}$$

Strain in a bar is the ratio of the relative nodal displacement to its length. For a bar member, the strain is uniform across its length. In general, strain is defined as the ratio of relative displacement over a differential length. In the limit, strain becomes the derivative of the displacement with respect to the x-coordinate:

$$\varepsilon = (x) = \mathcal{L}t(\Delta x \to 0)\left(\frac{u_a(x+\Delta x) - u_a(x)}{\Delta x}\right) = \mathcal{L}t(\Delta x \to 0)\frac{\Delta u_a}{\Delta x} = \frac{du_a}{dx} \tag{2-8b}$$

The differentiation of the displacement function given by Eq. (2-6a) yields the definition of strain that is identical to Eq. (2-8a).

$$\varepsilon = \frac{du_a}{dx} = \frac{\beta}{\ell} = \frac{u_{2a} - u_{1a}}{\ell} \tag{2-8c}$$

Strain is a tensor quantity, and it follows the t-sign convention. For a bar, a positive strain is also called a tensile strain. It is the ratio of the elongation to the bar length. A negative strain, also called a compressive strain, corresponds to the ratio of the contraction to the length. Strain is a dimensionless quantity. Its magnitude is small and ranges between 0 and 0.2 percent (0 and 0.002). Stress and strain are related through Hooke's law, as discussed in Chapter 1. If a stress (σ) is known, then the strain (ε) can be calculated as the ratio of the stress (σ) to Young's modulus (E) as $\varepsilon = \sigma/E$ and vice versa ($\sigma = E\varepsilon$). Hooke's law is a cause-and-effect class of relation. Stress can be the cause and strain the effect, and vice versa.

EXAMPLE 2-3: Strain in an Octahedral Bar

Calculate strain and deformation in the octahedral bar of Example 2-1 for each of the three load cases. Use Young's modulus for steel ($E = 200\,\text{GPa}$).

Load Case 1—Strain in the Segment 0 to 1 m

$$\varepsilon = \frac{\sigma}{E} = \frac{207\,\text{kPa}}{200\,\text{GPa}} = 1.04 \times 10^{-6}$$

For, $1\,\text{m} \leq x \leq 2\,\text{m}$

$$\varepsilon = 0$$

Load Case 2

For, $0 \leq x \leq 2\,\text{m}$,

$$\varepsilon(x) = \frac{\sigma(x)}{E} = \frac{(154 - 77x)\,\text{kPa}}{200\,\text{GPa}}$$
$$= (0.77 - 0.39x) \times 10^{-6}$$

Load Case 3

For, $0 \leq x \leq 1\,\text{m}$,

$$\varepsilon(x) = \frac{(361 - 77x)}{200} \times 10^{-6}$$
$$= (1.8 - 0.39x) \times 10^{-6}$$

For, $1 \leq x \leq 2\,\text{m}$,

$$\varepsilon(x) = \frac{(153.94 - 76.97x)}{200} \times 10^{-6}$$
$$= (0.77 - 0.39x) \times 10^{-6}$$

2.6 Definition of a Truss Problem

The information developed in the earlier sections is used to define and solve a truss problem. The problem is defined by the truss configuration (which is specified by the coordinates of its nodes given in Table 2-1), support conditions, member properties, and external loads. This information, also referred to as input data, must be available prior to the beginning of analysis. The input data are illustrated by considering the example of a four-node truss with five bars as shown in Fig. 2-12.

EXAMPLE 2-4: Five-Bar Truss

Coordinates of the Nodes

The geometry of the truss is specified by the x- and y-coordinates of its nodes. The coordinates of the nodes with the origin chosen at node 1 for the five-bar truss are marked in Fig. 2-12*a*. The coordinates can be used to plot the geometry of the truss, shown in Fig. 2-12*a*. It is a plane truss because all nodes lie in the x–y plane. The vertical distance (along the y-axis) between the support nodes (1 and 4) is referred to as the height (h) of the truss. Its span (s) is the horizontal distance measured along the x-coordinate axis between nodes 1 and 2. The span and height provide an overall size of the truss. It is a square truss because its height and span are equal ($h = s = 100\,\text{in.}$). The inclination of the diagonal bar is 45°.

Support Conditions

A truss must be supported to prevent its motion as a rigid body, such as an automobile. Loads from the truss are transferred to the foundation through the supports. The truss in Fig. 2-12*a* is supported at nodes 1 and 4. It is hinged to a foundation at node 4. A hinge support restrains movement along both the x- and y-coordinate directions. Node 1 is on a roller support, which allows movement along the y-coordinate direction, but displacement is restrained along the x-coordinate direction. A reaction is induced at the support node along the direction of restraint. The truss has two reactions (R_{4x} and R_{4y}) at node 4 and one reaction (R_{1x}) at node 1, as shown in Fig. 2-12*b*.

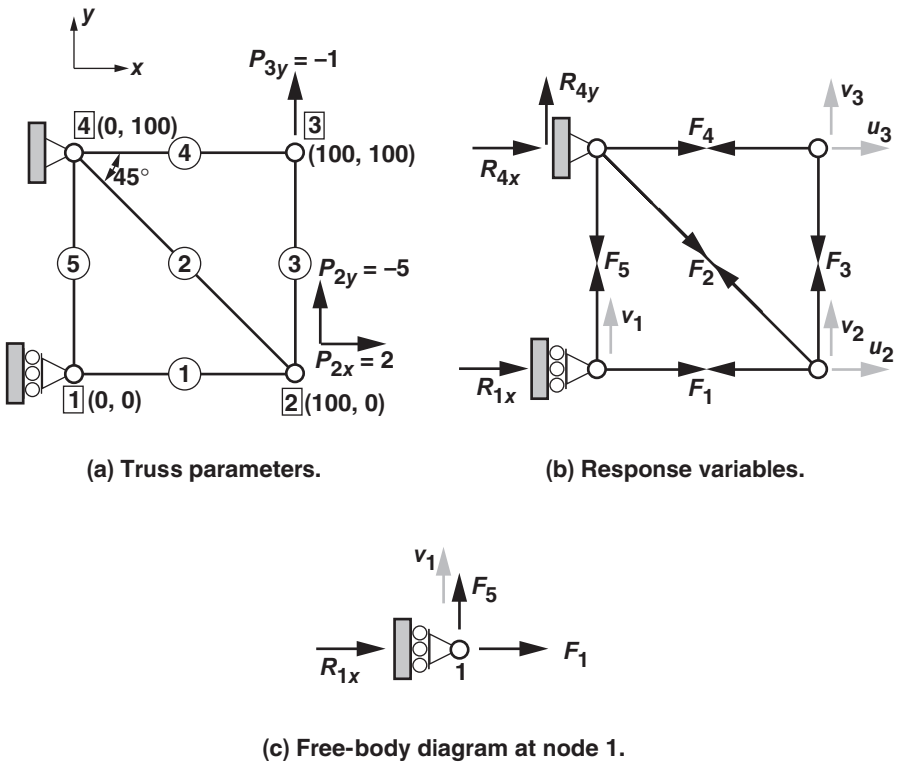

(a) Truss parameters.

(b) Response variables.

(c) Free-body diagram at node 1.

FIGURE 2-12 *Five-bar truss.*

TABLE 2-1 Coordinates and Loads for Truss in Fig. 2-12

Node Number	*x-Coordinate, In.*	*y-Coordinate, In.*	*Load along x-Coordinate, kip*	*Load along y-Coordinate, kip*
1	0	0	–	–
2	100	0	2	−5
3	100	100	–	−1
4	0	100	–	–

Member Properties

A truss bar connects two nodes. Bar 1 connects node 1 and 2, bar 2 connects nodes 4 and 2, bar 3 connects nodes 3 and 2; bar 4 connects nodes 4 and 3, and bar 5 connects nodes 4 and 1. The properties of a bar required for analysis are its length, size, and material. The length is calculated from the nodal coordinates, and this need not be given again. The size of the bar is specified by its cross-sectional area (A). For the truss, the areas of the horizontal bars (1 and 4) are considered to be equal to 2 in.^{2} ($A_1 = A_4 = 2$ in.^{2}). The areas of the other three bars are

considered to be equal to 1 in.^{2} ($A_2 = A_3 = A_5 = 1$ in.^{2}). A bar can be made of steel, aluminum, wood, or any other type of structural material. Truss analysis requires only the Young's modulus (E) of the material. The entire truss can be made of a single material, steel for example, or different bars can be made of different materials. The nature of the material does not increase the complexity of analyses. The bars of the truss in Fig. 2-12 are made of steel with Young's modulus $E = 30{,}000$ ksi.

External Loads

A truss can support loads at its nodes. Load at a node can be applied along the x- and y-coordinate directions as listed in Table 2-1. Load is also referred to as applied force, or external force. It is designated by the letter P. Node 2 of the truss in Fig. 2-12a is subjected to a load ($P_{2x} = 2$ kip) applied along the x-coordinate direction and a load ($P_{2y} = -5$ kip) directed along the negative y-coordinate direction. Node 3 is subjected to a load ($P_{3y} = -1$ kip) applied along the negative y-coordinate direction. A load at a support node should not be applied along the direction of restraint because such a load is directly transmitted to the foundation. Truss analysis requires four pieces of information:

1. Coordinates of the nodes
2. Support conditions
3. Member properties
4. External loads

The **objective of the analysis** is to determine the response of the truss consisting of the following six variables:

(GS–1) Bar force
(GS–2) Bar stress
(GS–3) Reaction
(GN–1) Bar strain
(GN–2) Bar deformation
(GN-3) Nodal displacement

The variables are separated into a stress group (GS), which includes the force, stress, and reaction; and a strain group (GN), which contains the strain, deformation, and displacement. For a determinate truss, it is straightforward to determine the variables of the stress group first and then back-calculate the variables of the strain group. For the five-bar truss, the (GS–1 and GN–3) response variables are marked in Fig. 2-12b.

1. *Bar forces:* The truss has five bar forces (F_1, F_2, F_3, F_4, F_5). To begin analysis, one should consider the bar forces, which are not yet known, to be positive and marked by arrowheads that point at each other.
2. *Reactions:* The truss has three restraints, one at node 1 and two at node 4. It develops three reactions along the direction of restraints, consisting of R_{1x} at node 1 and R_{4x} and R_{4y} at node 4. Mark all the reactions to be positive and directed along the coordinate axis because these are also unknowns.

3. *Loads:* Mark the specified external loads. It is preferable to mark the load directions along the positive coordinate axis. A negative load is specified with a negative value, as shown in Fig. 2-12*a*.

The bar stress, strain, deformation, and nodal displacements are back-calculated from the forces. The equilibrium equations yield the bar forces and reactions of a determinate truss. We will formally define a determinate truss later in this chapter. For the time being, assume that the five-bar truss shown in Fig. 2-12 is a determinate truss.

Equilibrium Equations (EE)

Consider a general determinate truss with m nodes and n bars. Two equilibrium equations can be written at each node as the summation of the forces along the x- and y-coordinate directions.

$$\sum_i {}_xF = 0 \quad \text{and} \quad \sum_i {}_yF = 0 \quad i = 1, 2, \ldots, m \text{ nodes} \tag{2-9}$$

There are $2m$ EE for a truss with m modes.

In truss analysis, the $2m$ equations are written in two stages. In the first stage, the EE are written at the nodes that can displace but not along the restrained directions. Solution of these EE yields the bar forces. In the second stage, the EE are written at the support nodes along the direction of restraints. Solution of these equations yields the reactions.

EE for the Five-Bar Truss

The five-bar truss has five displacement components (v_1, u_2, v_2, u_3, v_3), as marked in Fig. 2-12*b*. Node 1 can displace along the y-coordinate direction by an amount v_1, as marked at node 1. Likewise, mark the displacements u_2 and v_2 at node 2 and u_3 and v_3 at node 3. The fully restrained node 4 has no displacement. Five EE can be written along the five displacement directions.

EE at Node 1

One EE can be written along the displacement direction v_1. To write this EE, separate a free body for node 1 as shown in Fig. 2-12*c*. The summation of forces along the displacement direction v_1 yields the EE:

$$\text{EE along } v_1: \quad F_5 = 0 \tag{2-10a}$$

The bar force is zero ($F_5 = 0$) because this is the only force in the v_1 direction.

In truss analysis, it is not necessary to separate a free-body diagram to write the EE. The same equation (2-10*a*) is generated by writing the EE at node 1 along the v_1 direction shown in Fig. 2-12*b*.

EE at Node 2

This node has two displacements (u_2 and v_2), and one EE can be written along each direction.

$$\text{EE along } u_2: \quad P_{2x} - F_1 - F_2 \cos 45^\circ = 0$$

$$F_1 + \left(\frac{F_2}{\sqrt{2}}\right) = 2 \tag{2-10b}$$

$$\text{EE along } v_2: \quad P_{2y} + F_2 \sin 45^\circ + F_3 = 0$$

$$\left(\frac{-F_2}{\sqrt{2}}\right) - F_3 = -5 \tag{2-10c}$$

The two EE containing three unknown forces cannot be solved for F_1, F_2, and F_3.

EE at Node 3

This node has two displacements (u_3 and v_3), and the EE are

$$\text{EE along } u_3: \quad F_4 = 0 \tag{2-10d}$$

$$\text{EE along } v_3: \quad P_{3y} - F_3 = 0 \quad \text{or} \quad F_3 = -1 \tag{2-10e}$$

Solution to the five EE Eqs. (2-10*a*) to (2-10*e*) yields the five forces:

$$\begin{aligned} F_1 &= -4\,\text{kip} \\ F_2 &= 6\sqrt{2}\,\text{kip} \\ F_3 &= -1\,\text{kip} \\ F_4 &= 0 \\ F_5 &= 0 \end{aligned} \tag{2-10f}$$

Equilibrium Equations in Matrix Notation It is advantageous to write the EE using matrix notation. The reader should become familiar with matrix analysis because the structural analysis computer codes used by engineers in industry adopt this notation. The five equilibrium equations, Eqs. (2-10*a*) to (2-10*e*), written in matrix notation (following the rules of algebra given in Appendix 1) have the following form:

$$\begin{array}{c} u_2 \\ v_2 \\ v_3 \\ u_3 \\ v_1 \end{array} \begin{bmatrix} 1 & \frac{1}{\sqrt{2}} & 0 & 0 & 0 \\ 0 & -\frac{1}{\sqrt{2}} & -1 & 0 & 0 \\ 0 & 0 & 1 & 0 & 0 \\ 0 & 0 & 0 & 1 & 0 \\ 0 & 0 & 0 & 0 & -1 \end{bmatrix} \begin{Bmatrix} F_1 \\ F_2 \\ F_3 \\ F_4 \\ F_5 \end{Bmatrix} = \begin{Bmatrix} 2 \\ -5 \\ -1 \\ 0 \\ 0 \end{Bmatrix} \tag{2-11a}$$

In the matrix equation (2-11a), the EE have been rearranged to obtain an upper triangular diagonal matrix. Solution of the matrix equation (2-11a) yields the bar forces.

$$\begin{Bmatrix} F_1 \\ F_2 \\ F_3 \\ F_4 \\ F_5 \end{Bmatrix}_{\text{kip}} = \begin{Bmatrix} -4 \\ 6\sqrt{2} \\ -1 \\ 0 \\ 0 \end{Bmatrix} \tag{2-11b}$$

Equilibrium equations given by Eq. (2-11a) in matrix notation can be written as

$$[B]\{F\} = \{P\} \tag{2-12a}$$

The coefficient matrix $[B]$ is called the equilibrium matrix. It is a square matrix of dimension n, here $n = 5$. For a square matrix, the number of columns is equal to the number of rows. The unknown $\{F\}$ is a ($n = 5$) component force vector. The known load $\{P\}$ is also a ($n = 5$) component vector. The matrix Eq. (2-12a) is inverted to obtain the force vector.

$$\{F\} = [B]^{-1}\{P\} \tag{2-12b}$$

The inversion of a matrix is discussed in Appendix 1.

Remarks on the Matrix Equation

A row of the equilibrium matrix $[B]$ represents an equation written along a displacement direction. For example, the first row in Eq. (2-11a) is the EE written along the displacement direction u_2. Likewise, the third row is the EE written along the displacement direction v_3 and so forth. We will follow a sign convention for EE. In the EE ($[B]\{F\} = \{P\}$), the load vector $\{P\}$ must be aligned along the positive coordinate direction. For example, the first load component must be directed along u_2 that is, along the positive x-coordinate direction at node 2. Likewise, the third load component must be directed along v_3 that is, along the positive y-coordinate direction at node 3, and so forth. The rows of the EE that included the load can be shuffled without any consequence. For example, the equation along the displacement direction (u_2) can be written first, and the EE along the direction v_1 can be written last, as given in Eq. (2-11a). The reshuffled pattern shown in Eq. (2-11a), with zeros below the diagonal is called an upper triangular matrix. An upper triangular matrix equation is easily solved. Solve the last equation containing one unknown to calculate the value of the last variable; here, Eq. (2-11a) (the fifth equation) is solved to obtain $F_5 = 0$. Next proceed to the last but one equation; here, Eq. (2-11a) (the fourth equation). This equation has two unknowns, but one force (F_5) is known. Calculate the value of the remaining unknown (F_4). Repeat the process to solve all the equations. The solution to a triangular system of equations can be obtained by calculating the value of one unknown at a time. This process is called back-substitution. Equilibrium equations of many determinate trusses can be cast into a triangular form by shuffling the nodal EE, and such equations are trivially solved.

Calculation of Reactions

The reactions are also determined from an application of the equilibrium equations, which are written at the support nodes along the direction of the restraint. Take, for example, the five-bar truss. Its three reactions can be obtained from three EE written along R_{1x} at node 1, and R_{4x} and R_{4y} at node 4. The EE at support node 1 along the direction of restraint, which is the positive x-coordinate direction, yields

$$\text{EE along } R_{1x}: \quad R_{1x} + F_1 = 0 \qquad \text{or} \quad R_{1x} = -F_1 = 4 \tag{2-13a}$$

Consider next the support node 4, which is restrained in both the x- and y-coordinate directions and has two reactions (R_{4x} and R_{4y}). The EE along the two directions yields two equations.

$$\text{EE along } R_{4x}: \quad R_{4x} + F_4 + \frac{1}{\sqrt{2}}F_2 = 0 \qquad \text{or} \quad R_{4x} = -6 \tag{2-13b}$$

$$\text{EE along } R_{4y}: \quad R_{4y} - F_5 - \frac{1}{\sqrt{2}}F_2 = 0 \qquad \text{or} \quad R_{4y} = 6 \tag{2-13c}$$

The reactions are:

$$\begin{aligned} R_{1x} &= 4 \\ R_{4x} &= -6 \\ R_{4y} &= 6 \end{aligned} \tag{2-13d}$$

The three equations, (2-13a) to (2-13c), can be written in matrix notation as

$$\begin{bmatrix} -1 & 0 & 0 & 0 & 0 \\ 0 & -\frac{1}{\sqrt{2}} & 0 & -1 & 0 \\ 0 & \frac{1}{\sqrt{2}} & 0 & 0 & 1 \end{bmatrix} \begin{Bmatrix} F_1 \\ F_2 \\ F_3 \\ F_4 \\ F_5 \end{Bmatrix} = \begin{Bmatrix} R_{1x} \\ R_{4x} \\ R_{4y} \end{Bmatrix} \tag{2-14a}$$

This equation can be abridged to obtain

$$[B_R]\{F\} = \{R\} \tag{2-14b}$$

The equilibrium matrix $[B_R]$ for the reactions is a rectangular matrix. It has as many equations, or rows, as the number of reactions, say n_R. It can have a maximum of $n = 5$ columns. The dimension of the matrix $[B_R]$ is $n_R \times n$. The reaction matrix of the five-bar truss has three rows ($n_R = 3$) and five columns ($n = 5$). The equilibrium matrix $[B_R]$ will be utilized in the analysis of the settling of support.

Equilibrium of Reaction and Load

The overall equilibrium, that is the equilibrium of an entire structure, requires the balance of all three types of forces: the internal force (F), the reactions (R), and the load (P). However, the internal force is already in equilibrium by itself. In a truss, for example, the internal force in a bar is in self-equilibrium because it is represented by a pair of collinear arrowheads with opposite directions. It is easily observed in Fig. 2-12*b* that the forces in all five bars are in equilibrium. Therefore, the reactions must be in equilibrium only with the external loads, and such EE we will refer to as the external equilibrium equations. The external equilibrium in two dimensions is satisfied by three equations, which consist of two force balance EE and one moment balance EE.

Force equilibrium along the x-direction

$$\sum_x (R + P) = 0 \tag{2-15a}$$

Along the y-direction

$$\sum_y (R + P) = 0 \tag{2-15b}$$

Moment equilibrium in the x–y plane or along the z-direction

$$\sum_z (M_R + M_P) = 0 \tag{2-15c}$$

Here, R and P represent reactions and loads, respectively. M_R and M_P indicate moments due to reaction and load, respectively.

The reactions are correct provided the three EE [Eqs. (2-15*a*) to (2-15*c*)] are satisfied. For a determinate structure, the reactions can be calculated from Eq. (2-15) without determining the internal forces. For the five-bar truss, the equilibrium of the reactions and loads is easily verified.

$$\sum_x (R + P) = 0: \quad R_{4x} + R_{1x} + P_{2x} = 0 \rightarrow -6 + 4 + 2 = 0$$

$$\sum_y (R + P) = 0: \quad R_{4y} + P_{2y} + P_{3y} = 0 \rightarrow 6 - 5 - 1 = 0$$

$$\sum_{\text{node 4}} (M_R + M_P) = 0: \quad hR_{1x} + hP_{2x} + hP_{2y} + hP_{3y} = 0 \rightarrow h(4 + 2 - 5 - 1) = 0$$

The external EE can also be written as

$$
\begin{aligned}
&R_{4x} + R_{1x} = -P_{2x} = -2 \\
&R_{4y} = -(P_{2y} + P_{3y}) = 6 \\
&100R_{1x} = -100(P_{2x} + P_{2y} + P_{3y}) = 400
\end{aligned}
$$

The solution of the external EE yields the reaction

$$
\begin{aligned}
R_{1x} &= 4 \\
R_{4x} &= -6 \\
R_{4y} &= 6
\end{aligned}
$$

The reactions calculated from the external EE are in agreement with Eq. (2-13*d*).

Bar Stress

The stress in a bar is obtained as the ratio of the force to the area ($\sigma = F/A$). The five bar stresses are

$$
\begin{aligned}
\sigma_1 &= F_1/A_1 = -4/2 = -2\,\text{ksi (compression)} \\
\sigma_2 &= F_2/A_2 = 6\sqrt{2}/1 = 6\sqrt{2}\,\text{ksi (tension)} \\
\sigma_3 &= F_3/A_3 = -1/1 = -1.0\,\text{ksi (compression)} \\
\sigma_4 &= F_4/A_4 = 0 \\
\sigma_5 &= F_5/A_4 = 0
\end{aligned} \tag{2-16}
$$

Bars 1 and 3 are in compression. Bar 2 is in tension. Bar 4 and bar 5 are stress-free.

Bar Strain

The strain in a bar is obtained from Hooke's law as the ratio of the stress to Young's modulus ($\varepsilon = \sigma/E$). The five bar strains are

$$
\begin{aligned}
\varepsilon_1 &= \frac{\sigma_1}{E} = -\frac{2}{30{,}000} = -6.67 \times 10^{-5} = -6.67 \times 10^{-3}\,\text{percent} \\
\varepsilon_2 &= \frac{\sigma_2}{E} = -\frac{6\sqrt{2}}{30{,}000} = 28.28 \times 10^{-5} = 28.28 \times 10^{-3}\,\text{percent} \\
\varepsilon_3 &= \frac{\sigma_3}{E} = -\frac{1}{30{,}000} = -3.34 \times 10^{-5} = -3.34 \times 10^{-3}\,\text{percent} \\
\varepsilon_4 &= \frac{\sigma_4}{E} = 0 \\
\varepsilon_5 &= \frac{\sigma_5}{E} = 0
\end{aligned} \tag{2-17}
$$

Bars 1 and 3 are in compression. Bar 2 is in tension. Bar 4 and bar 5 are not strained.

Bar Deformation

The deformation in a bar is obtained as the product of the strain and its length ($\beta = \varepsilon\ell$). The length of a bar is calculated from its nodal coordinates. Consider a bar connecting two nodes (m_1 and m_2). Let the x- and y-coordinates of the nodes be x_{m1} and y_{m1}, and x_{m2} and y_{m2}, respectively. The length of the bar is calculated from the formula

$$\ell = \sqrt{(x_{m2} - x_{m1})^2 + (y_{m2} - y_{m1})^2} \tag{2-18a}$$

The lengths of the five bars are calculated as

$$\begin{aligned}
\ell_1 &= \sqrt{(100-0)^2 + (0-0)^2} = 100\,\text{in.}\\
\ell_2 &= \sqrt{(100-0)^2 + (0-100)^2} = 100\sqrt{2}\,\text{in.}\\
\ell_3 &= \sqrt{(100-100)^2 + (0-100)^2} = 100\,\text{in.}\\
\ell_4 &= \sqrt{(100-0)^2 + (100-100)^2} = 100\,\text{in.}\\
\ell_5 &= \sqrt{(0-0)^2 + (100-0)^2} = 100\,\text{in.}
\end{aligned} \tag{2-18b}$$

The deformation of the bars are as follows:

$$\begin{aligned}
\beta_1 &= \varepsilon_1\ell_1 = -6.67 \times 10^{-5} \times 100 = -6.67 \times 10^{-3}\,\text{in.}\\
\beta_2 &= \varepsilon_2\ell_2 = 28.3 \times 10^{-5} \times 100\sqrt{2} = 40 \times 10^{-3}\,\text{in.}\\
\beta_3 &= \varepsilon_3\ell_3 = -3.34 \times 100 \times 10^{-5} = -3.34 \times 10^{-3}\,\text{in.}\\
\beta_4 &= \varepsilon_4\ell_4 = 0\,\text{in.}\\
\beta_5 &= \varepsilon_5\ell_5 = 0\,\text{in.}
\end{aligned} \tag{2-18c}$$

Bars 1 and 3 contract while bar 2 expands. Bars 4 and 5 are not deformed.

2.7 Nodal Displacement

The determination of nodal displacement is more involved than the back-calculation of stress, strain, and deformation. We discuss three methods to calculate the displacement.

Method 1—Deformation Displacement Relation (DDR)

In this method, the nodal displacements are calculated from member deformations. Consider the five-bar truss as an example. Mark the deformations $\{\beta\}$ and displacements $\{X\}$ as shown in Fig. 2-13. The deformations should be marked with arrows pointing at each other

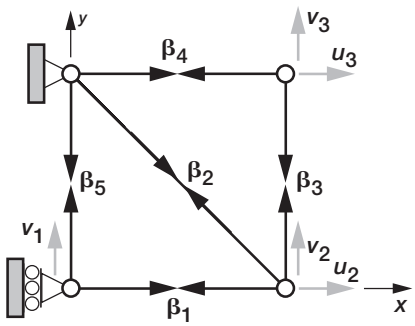

FIGURE 2-13 *Deformations and displacements.*

because β follows the sign convention for internal force. Deformation, by definition, is the relative axial displacement ($\beta = u_{2a} - u_{1a}$). For the truss, the five deformations are expressed in terms of the five nodal displacements by observation of Fig. 2-13:

$$\begin{aligned}
\beta_1 &= u_2 \\
\beta_2 &= u_2 \cos(45) - v_2 \cos(45) = \frac{1}{\sqrt{2}}(u_2 - v_2) \\
\beta_3 &= v_3 - v_2 \\
\beta_4 &= u_3 \\
\beta_5 &= -v_1
\end{aligned} \tag{2-19}$$

Equation (2-19) in matrix notation can be written as

$$\begin{Bmatrix} \beta_1 \\ \beta_2 \\ \beta_3 \\ \beta_4 \\ \beta_5 \end{Bmatrix} = \begin{bmatrix} 1 & 0 & 0 & 0 & 0 \\ \frac{1}{\sqrt{2}} & -\frac{1}{\sqrt{2}} & 0 & 0 & 0 \\ 0 & -1 & 1 & 0 & 0 \\ 0 & 0 & 0 & 1 & 0 \\ 0 & 0 & 0 & 0 & -1 \end{bmatrix} \begin{Bmatrix} u_2 \\ v_2 \\ v_3 \\ u_3 \\ v_1 \end{Bmatrix} \tag{2-20a}$$

or

$$\{\beta\} = [D]\{X\} \tag{2-20b}$$

Here,

$$\{X\} = \begin{Bmatrix} u_2 \\ v_2 \\ v_3 \\ u_3 \\ v_1 \end{Bmatrix}$$

and the coefficient matrix in Eq. (2-20*a*) is [*D*].

Equation (2-20), which relates deformation to displacement, is called the deformation displacement relation (DDR). Compare the matrix $[D]$ in the DDR to the equilibrium matrix $[B]$ in Eq. (2-11a). Matrices $[B]$ and $[D]$ are the transpose of each other ($[D] = [B]^T$). In EE [Eq. (2-11a)], $[B]$ is an upper triangular matrix, whereas it is a lower triangular matrix in the deformation displacement relations, given by Eq. (2-20a). The deformation displacement relation can be written using the transpose of the equilibrium matrix $[B]$ as

$$\{\beta\} = [B]^T\{X\} \tag{2-21a}$$

$$\{X\} = \left([B]^T\right)^{-1} = [B]^{-T}\{\beta\} \tag{2-21b}$$

The triangular matrix Eq. (2-21) is easily solved by back-substitution to obtain the displacements from known deformations.

The nodal displacements for the five-bar truss are obtained as the solution to Eq. (2-19) [or Eq. (2-20a)] using deformations from Eq. (2-18c).

$$\begin{aligned}
\beta_1 &= u_2 = -6.67 \times 10^{-3} \\
\beta_2 &= \frac{u_2}{\sqrt{2}} - \frac{v_2}{\sqrt{2}} = 40.0 \times 10^{-3} \\
\beta_3 &= -v_2 + v_3 = -3.34 \times 10^{-3} \\
\beta_4 &= u_3 = 0 \\
\beta_5 &= v_1 = 0
\end{aligned}$$

The nodal displacements are obtained as a solution to the DDR.

$$\begin{aligned}
u_1 &= 0 \text{ (boundary condition)} \\
v_1 &= 0 \\
u_2 &= -6.7 \times 10^{-3} \text{ in.} \\
v_2 &= -63.24 \times 10^{-3} \text{ in.} \\
u_3 &= 0 \\
v_3 &= -66.57 \times 10^{-3} \text{ in.} \\
u_4 &= 0 \text{ (boundary condition)} \\
v_4 &= 0 \text{ (boundary condition)}
\end{aligned} \tag{2-22}$$

The maximum displacement occurs at node 3 along the negative y-coordinate direction ($v_3 = -66.57 \times 10^{-3}$ in.).

Calculation of displacement from the DDR ($\{\beta\} = [B]^T\{X\}$) is straightforward. This should be the method of choice.

Method 2—Graphical Determination of Displacement

Nodal displacements of a truss can be determined graphically. This technique is credited to the French engineer J. V. Williot (1843–1907). It is based on the motion or displacements of

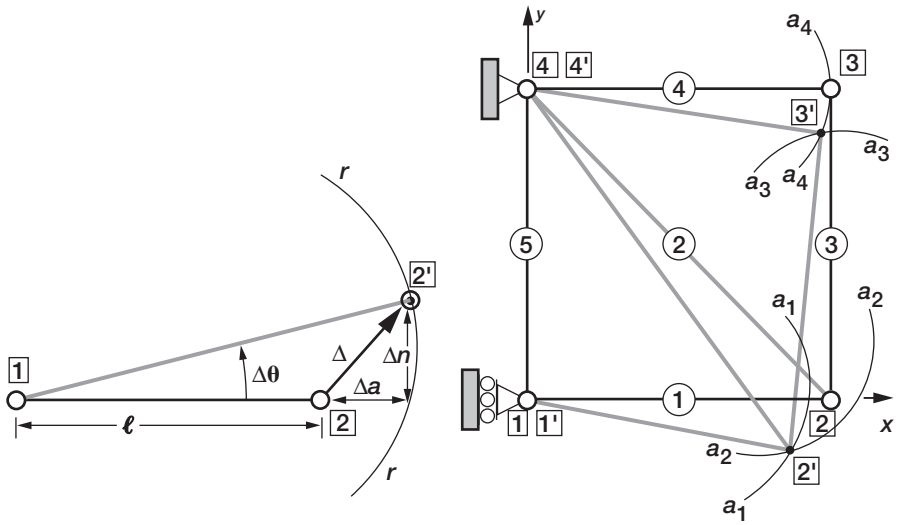

FIGURE 2-14 *Graphical determination of displacement.*

the nodes of a bar, as depicted in Fig. 2-14. It is assumed that the position of node 1 in Fig. 2-14*a* is known. It has either zero displacement ($u_1 = v_1 = 0$) or known displacement (u_1 and v_1). With respect to node 1, node 2 can move along the bar axis by Δa and perpendicular to it by Δn. In other words, the bar rotates about node 1 by Δn with the radius $\ell + \Delta a$, and the process displaces node 2 to the new location $2'$. The displaced bar occupies the position 1–$2'$, and the vector (Δ) between positions 2 and $2'$ is the displacement vector of node 2. The magnitude of axial elongation Δa is known because it equals the deformation of the bar ($\Delta a = \beta$). The magnitude of the transverse displacement Δn is not known, but it lies along the arc (r–r) drawn with its center at node 1 and the radius $R = \ell + \Delta a$. The magnitude of Δn will be determined from subsequent construction. Repetition of this simple concept provides the displacement diagram of a truss. This technique is accurate for the small displacement theory. Williot's technique for the five-bar truss is depicted in Fig. 2-14*b*.

The diagram is constructed in the following steps.

Step 1—Select a Node (i) That Has a Zero or Known Displacement

Node 4 is selected because it is a boundary node with zero displacement ($u_4 = v_4 = 0$).

Step 2—Select a Bar That Connects Node (i= 4)

Bar 5 with nodes 4 and 1 is selected. Bar 5 is selected instead of bar 2 or bar 4 because the other node of the bar (node 1) has a simple motion. It is constrained to move only in the y-coordinate direction. Node 1 has no displacement because the deformation $\beta_5 = 0$. In other words, nodes 1 and 4 retain their original position even after the application of load.

Step 3—Locate the Displacement of Another Node (i+ 1= 2).
Bar 1, connecting nodes 1 and 2, contracts by the deformation amount ($\beta_1 = -6.67 \times 10^{-3}$ in.). Draw an arc ($a_1 - a_1$) with radius $r = \ell_1 - \beta_1$ and center at node 1. The displacement of node 2 must lie in the arc $a_1 - a_1$. The displaced position of node 2 can be located by considering the deformation of bar 2′. Bar 2 expands by the amount $\beta_2 = 40 \times 10^{-3}$ in. Draw an arc ($a_2 - a_2$) with radius $r = \ell_2 + \beta_2$ and center at node 4. The displacement of node 2 must lie in the arc $a_2 - a_2$. The intersection of the arcs ($a_1 - a_1$ and $a_2 - a_2$) locates the position of node 2′ after deformation.

Step 4—Locate the Displacement of the Next Node (i+ 2= 3)
Bar 4 has no axial deformation ($\beta_4 = 0$). Draw an arc ($a_4 - a_4$) with radius $r = \ell_4$ and center at node 4. The displacement of node 4 must lie in this arc. Bar 3 contracts by the deformation amount ($\beta_3 = -3.34 \times 10^{-3}$ in.). Draw an arc ($a_3 - a_3$) with radius $r = \ell_3 - \beta_3$ and center at the deformed node 2′. The displacement of node 3 must lie in this arc. The intersection of the arcs ($a_4 - a_4$ and $a_3 - a_3$) locates the position of node 3′ after deformation.

Step 5—Connect the Deformed Nodes
Connect the deformed nodes (1′−2′), (2′−3′), (3′−4′), (4′−2′), and (4′−1′) to obtain the deformed configuration of the truss. The nodal displacements can be measured from the Williot's diagram.

Displacements at Node 3
Displacement components (u_3 and v_3) at node 3 are obtained by projecting $\Delta = 3 - 3'$ onto the x- and y-axes.

$$u_3 = \Delta x_3 = \text{projection of vector } 3-3' \text{ along the } x\text{-axis} = 0\,\text{in.}$$
$$v_3 = \Delta y_3 = \text{projection of vector } 3-3' \text{ along the } y\text{-axis} = -66.57 \times 10^{-3}\,\text{in.} \qquad (2\text{-}23a)$$

Displacements at Node 2

$$u_2 = \Delta x_2 = \text{projection of vector } 2-2' \text{ along the } x\text{-axis} = -6.7 \times 10^{-3}\,\text{in.}$$
$$v_2 = \Delta y_2 = \text{projection of vector } 2-2' \text{ along the } y\text{-axis} = -63.24 \times 10^{-3}\,\text{in.} \qquad (2\text{-}23b)$$

Nodes 1 and 4 have no displacements. The graphical method can degrade the accuracy of the displacements.

Method 3—Displacement Calculation from Energy Principle
Calculating displacements from the energy principle is a popular approach. This approach is based on energy and work concepts. Since both concepts are discussed in Chapter 12, here we provide a cursory account for trusses. The reader should refer to Chapter 12 for more information.

Strain Energy
Energy is stored in a bar when it deforms. The stored energy is called strain or deformation energy. An undeformed bar has no strain energy stored in it. Strain energy (U) is defined in

terms of its density (u_d), which is the strain energy per unit volume (V). Strain energy and its density are defined as

$$U_{bar} = \int u_d dv \tag{2-24a}$$

$$u_d = \int_0^{\varepsilon} \sigma d\varepsilon \tag{2-24b}$$

For a bar member, the strain energy expression simplifies because the stress ($\sigma = F/A$), strain ($\varepsilon = \sigma/E = F/AE$), and internal force ($F$) are uniform across the volume ($V = A\ell$) of the bar with length ℓ and area A. Strain energy expressed in stress, strain, and internal force has the following form:

$$u_d = \int_0^{\varepsilon} \varepsilon E d\varepsilon = \frac{1}{2}E\varepsilon^2 = \frac{1}{2}\frac{\sigma^2}{E} \tag{2-24c}$$

$$U_{\text{bar}} = \frac{1}{2}E\varepsilon^2 A\ell = \frac{1}{2}\frac{F^2\ell}{AE} \tag{2-24d}$$

The strain energy can be written in terms of force and deformation ($\beta = \varepsilon\ell$) as

$$U_{\text{bar}} = \frac{1}{2}(E\varepsilon A)(\varepsilon\ell) = \frac{1}{2}F\beta \tag{2-24e}$$

Strain energy stored in a truss with n bars is obtained by adding the individual contributions from the n bars.

$$U_{\text{truss}} = \left(\frac{1}{2}\right)\sum_{i=1}^{n}\frac{F_i^2\ell_i}{A_iE_i} = \left(\frac{1}{2}\right)\sum_{i=1}^{n}F_i \times \left(\frac{\ell F}{AE}\right)_i \tag{2-24f}$$

The strain energy equation expressed in terms of the force and deformation has the following form:

$$U_{\text{truss}} = \frac{1}{2}\sum_{i=1}^{n}F_i\beta_i = \frac{1}{2}\{F\}^T\{\beta\} \tag{2-24g}$$

The matrix term ($\{F\}^T\{\beta\}$) is the dot product of the force and deformation vectors.

Work

Work is done when a load P moves through a displacement X. If both P and X are assumed to be collinear acting in the same direction, and displacement is proportional to load, then work (W) is defined as

$$W = \int_0^X PdX = \frac{1}{2}PX \tag{2-25a}$$

For a truss the definition of work is generalized for m loads ($P_1, P_2, \ldots, P_m$) that move through m displacements ($X_1, X_2, \ldots, X_m$), respectively. It is obtained as the sum of individual contributions for the m-component load and displacement:

$$W_{\text{truss}} = \frac{1}{2}\sum_{i=1}^{m} P_i X_i = \frac{1}{2}\{P\}^T\{X\} \tag{2-25b}$$

Work-Energy Conservation Theorem

According to this theorem, the strain energy stored in the structure is equal to the work done by the external load.

$$U = W \tag{2-26a}$$

$$\frac{1}{2}\{F\}^T\{\beta\} = \frac{1}{2}\{P\}^T\{X\} \tag{2-26b}$$

or

$$\{F\}^T\{\beta\} = \{P\}^T\{X\} \tag{2-26c}$$

In other words, the work done by the load is stored as the internal energy in the bars of the truss.

EXAMPLE 2-5

For the five-bar truss shown in Fig. 2-12a, calculate the strain energy and the work, and illustrate the conservation theorem.

Solution

Strain energy U_{truss} is calculated from Eq. (2-24g) as

$$U_{\text{truss}} = \frac{1}{2}(F_1\beta_1 + F_2\beta_2 + F_3\beta_3 + F_4\beta_4 + F_5\beta_5)$$

$$= \frac{1}{2}\left\{-4 \times \left(-6.67 \times 10^{-3}\right) + 6\sqrt{2} \times 40 \times 10^{-3} - 1 \times \left(-34 \times 10^{-3}\right)\right\}$$

$$= \frac{1}{2}\{26.68 + 339.41 + 3.4\} \times 10^{-3} = 185 \times 10^{-3}\ \text{in.-k} \tag{2-27a}$$

Work done by loads is calculated from Eq. (2-25b)

$$W_{\text{truss}} = \frac{1}{2}\left\{P_{2x}u_2 + P_{2y}v_2 + P_{3y}v_3\right\}$$
$$= \frac{1}{2}\left\{2 \times \left(-6.67 \times 10^{-3}\right) - 5 \times \left(-63.24 \times 10^{-3}\right) - 1 \times \left(-66.57 \times 10^{-3}\right)\right\}$$
$$= \frac{1}{2}(-13.34 + 316.20 + 66.57) \times 10^{-3} = 185 \times 10^{-3}\ \text{in.-k} \qquad (2\text{-}27b)$$

The conservation theorem is satisfied because the strain energy is equal to the work ($U_{\text{truss}} = W_{\text{truss}} = 185$ in.-k).

Deformation Displacement Relation

The conservation theorem is used to derive the deformation displacement relation ($\{\beta\} = [B]^T\{X\}$) that was obtained earlier from the geometrical consideration for the five-bar truss; see Eq. (2-21*a*). In this derivation, we utilize matrix notation for the equilibrium equation ($[B]\{F\} = \{P\}$), which is Eq. (2-12*a*) and the transpose of the EE ($\{F\}^T[B]^T = \{P\}^T$). The conservation theorem ($U = W$) can be written as

$$\frac{1}{2}\{F\}^T\{\beta\} = \frac{1}{2}\{P\}^T\{X\} \qquad (2\text{-}28a)$$

Eliminate load $\{P\}$ in favor of the internal force $\{F\}$ by using the EE ($[B]\{F\} = \{P\}$) to obtain

$$\frac{1}{2}\{F\}^T\{\beta\} = \frac{1}{2}\{F\}^T[B]^T\{X\}$$

or

$$\frac{1}{2}\{F\}^T\left(\{\beta\} - [B]^T\{X\}\right) = 0$$

Because the force vector is not a null vector ($\{F\} \neq 0$)

$$\{\beta\} = [B]^T\{X\} \qquad (2\text{-}28b)$$

For a determinate structure, the *EE* matrix $[B]$ is a square matrix, and Eq. (2-28*b*) can be inverted to obtain the displacement. As we have seen for the five-bar truss, the determination of displacement does not require a formal inversion of the EE matrix because most often it is a triangular matrix.

Force Deformation Relations (FDR)

The force (F) in a bar is related to its deformation (β) through the force deformation relations (FDR). Deformation (β_i) for the ith member of a truss can be written as

$$\beta_i = (\varepsilon\ell)_i = \left(\frac{\sigma\ell}{E}\right)_i = \left(\frac{F}{A}\frac{\ell}{E}\right)_i = \left(\frac{\ell}{AE}\right)_i F_i = g_i F_i \qquad (2\text{-}29a)$$

Here, $g_i = \left(\frac{\ell}{AE}\right)_i$ is called the flexibility coefficient for the ith bar. The bar deformation is equal to its flexibility coefficient ($\beta_i = g_i$) for a unit value of the bar force ($F_i = 1$). For an n bar truss, the deformation force relationship can be written as

$$\begin{aligned} \beta_1 &= g_1 F_1 \\ \beta_2 &= g_2 F_2 \\ &\vdots \\ \beta_n &= g_n F_n \end{aligned} \tag{2-29b}$$

In matrix notation, Eq. (2-29b) can be written as

$$\{\beta\} = [G]\{F\} \tag{2-29c}$$

The coefficient matrix $[G]$ is called the flexibility matrix. It is a diagonal matrix. The diagonal coefficient (g_{ii}) is defined as

$$g_{ii} = \left(\frac{\ell}{AE}\right)_i \quad (i - 1, 2, \ldots, n) \tag{2-29d}$$

The flexibility matrix of a truss with n bars can be written as

$$[G] = \begin{bmatrix} g_{11} & & & & \\ & g_{22} & & [0] & \\ & & g_{ii} & & \\ & [0] & & \ddots & \\ & & & & g_{nn} \end{bmatrix} \tag{2-29e}$$

Elimination of deformations between the deformation displacement relation ($\{\beta\} = [G]\{F\}$) and the deformation displacement relation $\{\beta\} = [B]^T\{X\}$ yields the force displacement relations.

$$\begin{aligned} \{\beta\} &= [G]\{F\} = [B]^T\{X\} \\ \{X\} &= [B]^{-T}[G]\{F\} \end{aligned} \tag{2-30}$$

Displacement can be back-calculated from the force using the force displacement relationship given by Eq. (2-30). The notation $[B]^{-T}$ represents the inverse of the transpose of the matrix $[B]$, $[B]^{-T} = [[B]^T]^{-1}$.

Castigliano's Second Theorem

Displacement can also be calculated using Castigliano's second theorem, discussed in Chapter 12. A cursory account of the method is given here for completeness. According

to the theorem, displacement is equal to the derivative of strain energy with respect to load as

$$X_j = \frac{\partial U}{\partial P_j} \quad (j = 1, 2, \ldots, m) \tag{2-31a}$$

The displacement (X_j) and load (P_j) act at the same location or node of a truss, and both X_j and P_j are collinear, acting in the same direction. The derivative ($\partial U/\partial P_j$) can be expanded by using the chain rule of differentiation.

$$\frac{\partial U}{\partial P_j} = \sum_{i=1}^{n} \frac{\partial U}{\partial F_i} \frac{\partial F_i}{\partial P_j} \tag{2-31b}$$

Here, F_i is the force in the ith bar, and the strain energy stored in it is U_i. Strain energy in terms of internal force can be written as

$$U = \sum_{i=1}^{n} U_i = \sum_{i=1}^{n} \left(\frac{\ell}{2AE}\right)_i F_i^2 \tag{2-31c}$$

$$\frac{\partial U}{\partial F_i} = \left(\frac{\ell}{AE}\right)_i F_i = \beta_i \qquad (i = 1, 2, \ldots, n) \tag{2-31d}$$

The partial derivative of the strain energy with respect to bar force is equal to the member deformation. The derivative ($\partial F_i/\partial P_j$) is calculated from the equilibrium equation

$$[B]\{F\} = \{P\} \tag{2-32}$$

The EE matrix $[B]$ is independent of load (P), and the EE can be differentiated with respect to P_j to obtain

$$\frac{\partial}{\partial P_j}([B]\{F\} = \{P\}) = [B]\left\{\frac{\partial F}{\partial P_j}\right\} = \left\{\frac{\partial P}{\partial P_j}\right\} = \{N_j\} \tag{2-33a}$$

$\{N_j\}$ is a unit vector with unity at the jth location and zero at every other location. For example, $\{N_1\}$ and $\{N_4\}$ for a five-component ($m = 5$) load vector are

$$\{N_1\} = \begin{Bmatrix} 1 \\ 0 \\ 0 \\ 0 \\ 0 \end{Bmatrix} \quad \text{and} \quad \{N_4\} = \begin{Bmatrix} 0 \\ 0 \\ 0 \\ 1 \\ 0 \end{Bmatrix} \tag{2-33b}$$

For a determinate truss, the square equilibrium matrix $[B]$ can be inverted to obtain $(\partial F/\partial P_j)$ as

$$\left\{\frac{\partial F}{\partial P_j}\right\} = [B]^{-1}\{N_j\} = j\text{th column of } [B]^{-1} = \{f^j\} \tag{2-33c}$$

The vector $\{f^j\}$ represents the n-component internal force vector of a truss that is subjected to a unit load $\{N_j\}$ defined in Eq. (2-33b). A component of the vector $\{f^j\}$ is designated by (f_i^j). The vector $\{f^j\}$ is also called the influence coefficient vector. Substitution of Eqs. (2-31d) and (2-33c) into Eq. (2-31b) yields the displacement formula.

$$X_j = \sum_{i=1}^{n}\left(\frac{\ell}{AE}\right)_i F_i f_i^j \qquad (j = 1, 2, \ldots m) \tag{2-34}$$

For a truss with m displacement unknowns, Eq. (2-34) has to be repeated m times. Mathematically, it can be proven that the formula for displacement given by Eq. (2-34) is identical to the force displacement relations given by Eq. (2-30).

Calculation of displacement using Eq. (2-34) is illustrated considering the five-bar truss shown in Fig. 2-12a as an example. Let us calculate the displacement u_2. The first EE given by Eq. (2-11a) corresponds to the displacement ($u_2 = X_1$). The influence coefficient vector $\{f^1\}$ is obtained as the solution to the following equation:

$$[B]\{f^1\} = \{N_1\} \tag{2-35a}$$

or

$$\begin{bmatrix} 1 & \frac{1}{\sqrt{2}} & 0 & 0 & 0 \\ 0 & -\frac{1}{\sqrt{2}} & -1 & 0 & 0 \\ 0 & 0 & 1 & 0 & 0 \\ 0 & 0 & 0 & 1 & 0 \\ 0 & 0 & 0 & 0 & 1 \end{bmatrix} \begin{Bmatrix} f_1^1 \\ f_2^1 \\ f_3^1 \\ f_4^1 \\ f_5^1 \end{Bmatrix} = \begin{Bmatrix} 1 \\ 0 \\ 0 \\ 0 \\ 0 \end{Bmatrix} \tag{2-35b}$$

The solution to Eq. (2-35b) yields

$$\begin{Bmatrix} f_1^1 \\ f_2^1 \\ f_3^1 \\ f_4^1 \\ f_5^1 \end{Bmatrix} = \begin{Bmatrix} 1 \\ 0 \\ 0 \\ 0 \\ 0 \end{Bmatrix} \tag{2-35c}$$

$$u_2 = \left(\frac{\ell}{AE}\right)_1 F_1 f_1^1 + \sum_{i=2}^{5} \left(\frac{\ell}{AE}\right)_i F_i f_i^1 \tag{2-35d}$$

$$u_2 = \frac{100}{2 \times 30{,}000} \times (-4)(1) = -6.67 \times 10^{-3} \text{ in.} \tag{2-35e}$$

Displacement v_2 corresponds to the second EE in Eq. (2-11a). The vector $\{f_2\}$ is obtained as the solution to Eq. (2-35b) for the right side vector $\{N_2\}$.

$$\begin{Bmatrix} f_1^2 \\ f_2^2 \\ f_3^2 \\ f_4^2 \\ f_5^2 \end{Bmatrix} = \begin{Bmatrix} 1 \\ -\sqrt{2} \\ 0 \\ 0 \\ 0 \end{Bmatrix}$$

$$v_2 = \left(\frac{\ell}{AE}\right)_1 F_1 f_1^2 + \left(\frac{\ell}{AE}\right)_2 F_2 f_2^2 \quad = \frac{100}{2 \times 30{,}000} \times (-4)(1) + \frac{100\sqrt{2}}{1 \times 30{,}000} \times (8.485)\left(-\sqrt{2}\right)$$

$$v_2 = -63.24 \times 10^{-3} \text{ in.} \tag{2-35f}$$

Likewise, displacement v_3 is obtained:

$$\begin{Bmatrix} f_1^3 \\ f_2^3 \\ f_3^3 \\ f_4^3 \\ f_5^3 \end{Bmatrix} = \begin{Bmatrix} 1 \\ -\sqrt{2} \\ 1 \\ 0 \\ 0 \end{Bmatrix}$$

$$v_3 = \left(\frac{\ell}{AE}\right)_1 F_1 f_1^3 + \left(\frac{\ell}{AE}\right)_2 F_2 f_2^3 + \left(\frac{\ell}{AE}\right)_3 F_3 f_3^3 = -66.57 \times 10^{-3} \text{ in.} \tag{2-35g}$$

The displacements $u_3 = 0$ and $v_1 = 0$ because the product $(f_k F_k)$ is zero. The displacements given by Eqs. (2-34e), (2-34f), and (2-34g) are in agreement with the same given by Eq. (2-22).

2.8 Initial Deformation in a Determinate Truss

A determinate truss can experience deformation because of the change in the temperature and the settling of its support. The temperature is assumed to be ambient at the time the truss was manufactured and at that time it was free from initial deformation. Let the temperature

increase over the ambient be (ΔT). The problem is to calculate the response of the truss due to the change in the temperature. Likewise, assume that the original foundation of the structure was firm and free from initial deformation. After assembly, one or more of the truss supports may settle by small amounts ΔX relative to the firm foundation. The problem is to determine the response of the truss due to settling of its supports.

Problems with temperature changes and support settling are referred to as initial deformation problems. We begin their solution by adjusting Hooke's law to include initial deformation in the strain. Hooke's law relates stress and the elastic strain. Actual strain in the structure is referred to as the total strain (ε^t), and it is the sum of two components: the elastic strain (ε^e) and initial strain (ε^0).

$$\varepsilon^t = \varepsilon^e + \varepsilon^0 \tag{2-36a}$$

Only the elastic strain (ε^e) induces stress. The stress-strain Hooke's law can be written as

$$\sigma = E\varepsilon^e \tag{2-36b}$$

or

$$\sigma = E\left(\varepsilon^t - \varepsilon^0\right) \tag{2-36c}$$

Initial strain due to change in temperature (ΔT) is the product of the coefficient of thermal expansion (α) and ΔT.

$$\varepsilon^0 = \alpha\Delta T \tag{2-36d}$$

Hooke's law for a problem with thermal strain can be written as

$$\sigma = E(\varepsilon^t - \alpha\Delta T) \tag{2-36e}$$

Stress induced because of a change in the temperature is illustrated in Example 2-6.

EXAMPLE 2-6

Consider a uniform steel bar of cross-sectional area $A = 1\,\text{in.}^2$ and length $\ell = 100\,\text{in.}$ supported between two rigid walls, as shown in Fig. 2-15. Its temperature is changed by $\Delta T = 50\,°\text{C}$. Calculate the response of the bar. For steel, the Young's modulus is $E = 30{,}000\,\text{ksi}$ and the coefficient of thermal expansion is $\alpha = 12 \times 10^{-6}/°\text{C}$.

The bar has no displacement ($u = 0$) because it is constrained at both nodes (1 and 2). The total strain, which is equal to the derivative of the displacement with respect to the x-coordinate, is also zero.

$$\varepsilon^t = \frac{du}{dx} = 0 \tag{2-37a}$$

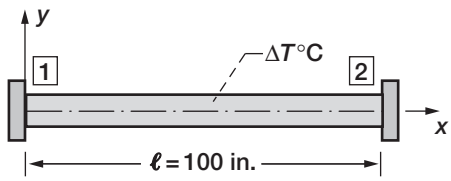

FIGURE 2-15 *Temperature stress in a bar.*

The thermal strain in the bar is

$$\varepsilon^0 = \alpha \Delta T \tag{2-37b}$$

Elastic strain can be back-calculated from the total strain as

$$\varepsilon^t = \varepsilon^e + \varepsilon^0 = 0$$

$$\varepsilon^e = \varepsilon^t - \alpha \Delta T = -\alpha \Delta T \tag{2-37c}$$

The stress from Eq. (2-36*a*) becomes

$$\sigma = E\varepsilon^e = -E\alpha \Delta T \tag{2-37d}$$

The total deformation (β') is zero because the total strain is zero. The initial deformation and elastic deformation are

$$\beta^t = \varepsilon^t \ell = 0 \tag{2-37e}$$

$$\beta^0 = \varepsilon^0 \ell \tag{2-37f}$$

$$\beta^e = -\varepsilon^0 \ell \tag{2-37g}$$

The numerical values of the response variables for the bar are as follows:

$$\begin{aligned}
\varepsilon^e = -\varepsilon^0 &= -12 \times 10^{-6} \times 50 = -0.6 \times 10^{-3} \\
\varepsilon^t &= 0 \\
\beta^t &= 0 \\
u_{1a} = u_{2a} &= 0 \\
\beta^e = -\beta^0 &= -0.6 \times 10^{-1} \\
\sigma &= -30{,}000 \times 0.6 \times 10^{-3} = -18\,\text{ksi} \\
F &= \sigma A = -18\,\text{kip}
\end{aligned} \tag{2-37h}$$

A change of temperature of $\Delta T = 50\,^{\circ}\mathrm{C}$ induced a 18-ksi compressive stress and a compressive strain of magnitude 0.6×10^{-3}. The reader should remember that stress is induced because of elastic strain, whereas displacement is induced because of total strain.

2.9 Thermal Effect in a Truss

The response calculation because of thermal effect is illustrated by considering the five-bar truss shown in Fig. 2-12*a* as an example. Calculate the response of the structure for a change in temperature ($\Delta T = 50\,^{\circ}\mathrm{C}$) for each of its five bars. The thermal response of the truss is determined in the following steps.

Step 1—Internal Force

For a determinate truss, the solution of the equilibrium equation ($[B]\{F\} = \{P\}$) yields the forces $\{F\}$. The change in the temperature has no effect in the equilibrium matrix $[B]$. No mechanical load is induced in a determinate system because of temperature, or ($\{P\} = \{0\}$). Therefore, the internal force is a null vector ($\{F\} = \{0\}$), and the truss is stress-free. No reaction ($\{R\} = \{0\}$) is induced because there is no load.

Step 2—Initial Deformation $\{\beta^0\}$

The initial deformation in the *i*th bar because of the change in the temperature is

$$\beta_i^0 = \varepsilon_i^0 \ell_i = (\alpha \Delta T \ell)_i \tag{2-38a}$$

The initial strain vectors of the five-bar truss are

$$\{\varepsilon\}^0 = \begin{Bmatrix} \varepsilon_1^0 \\ \varepsilon_2^0 \\ \varepsilon_3^0 \\ \varepsilon_4^0 \\ \varepsilon_5^0 \end{Bmatrix} = \alpha \Delta T \begin{Bmatrix} 1 \\ 1 \\ 1 \\ 1 \\ 1 \end{Bmatrix} \tag{2-38b}$$

The initial deformation vector ($\{\beta\}^0 = \{\varepsilon\ell\}^0$) is

$$\{\beta\}^0 = \begin{Bmatrix} \beta_1^0 \\ \beta_2^0 \\ \beta_3^0 \\ \beta_4^0 \\ \beta_5^0 \end{Bmatrix} = \alpha \Delta T(\ell = 100) \begin{Bmatrix} 1 \\ \sqrt{2} \\ 1 \\ 1 \\ 1 \end{Bmatrix} \tag{2-38c}$$

Total deformation $\{\beta\}^t$ in the absence of elastic deformation is equal to the initial deformation.

$$\{\beta\}^t = \{\beta\}^e + \{\beta\}^0 = \{\beta\}^0 = \alpha\Delta T\ell \begin{Bmatrix} 1 \\ \sqrt{2} \\ 1 \\ 1 \\ 1 \end{Bmatrix} \tag{2-38d}$$

Displacement $\{X\}^0$ is induced because of deformation. It is calculated as the solution to the DDR $\{\beta\}^t = [B]^T\{X\}^0$.

$$(100\,\alpha\Delta T)\begin{Bmatrix} 1 \\ \sqrt{2} \\ 1 \\ 1 \\ 1 \end{Bmatrix} = \begin{bmatrix} 1 & 0 & 0 & 0 & 0 \\ \frac{1}{\sqrt{2}} & -\frac{1}{\sqrt{2}} & 0 & 0 & 0 \\ 0 & -1 & 1 & 0 & 0 \\ 0 & 0 & 0 & 1 & 0 \\ 0 & 0 & 0 & 0 & -1 \end{bmatrix} \begin{Bmatrix} u_2^0 \\ v_2^0 \\ v_3^0 \\ u_3^0 \\ v_1^0 \end{Bmatrix} \tag{2-38e}$$

Solution to Eq. (2-38*e*) yields the displacements:

$$\begin{aligned} u_2^0 &= 60 \times 10^{-3}\ \text{in.} \\ v_2^0 &= -60 \times 10^{-3}\ \text{in.} \\ v_3^0 &= 0 \\ u_3^0 &= 60 \times 10^{-3}\ \text{in.} \\ v_1^0 &= -60 \times 10^{-3}\ \text{in.} \end{aligned} \tag{2-38f}$$

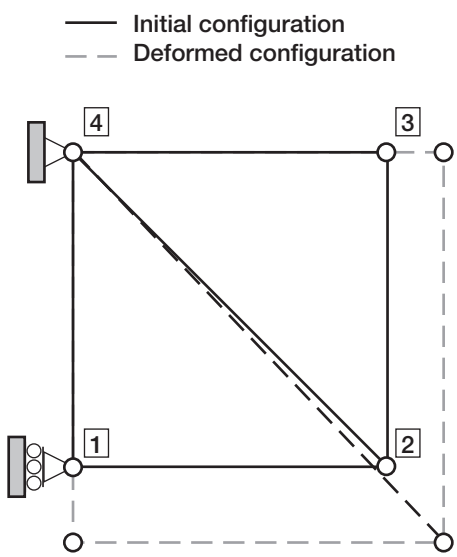

FIGURE 2-16 *Displacement caused by temperature.*

The displacement pattern of the truss is shown in Fig. 2-16. It expands in the positive x- and negative y-directions without violating the boundary conditions. In a determinate truss, the change in temperature has no effect on stress parameters like internal force, reaction, and stress, but displacement, deformation, and strain are induced.

2.10 Settling of Support

The response caused by support settling is obtained by calculating the initial deformation and then the displacement. Consider a truss with m modes. Let its jth support node settle by ΔX_j amount along the direction of the reaction R_j. The deformation caused by this settling is formulated using the deformation displacement relation (DDR). The DDR formulation requires the EE along the direction of the reaction R_j

$$R_j = \sum_{i=1}^{n} B_{Ri} F_i \quad \text{or} \quad R_j = \left[B_{R_j}\right]\{F\} \tag{2-39a}$$

Here $[B_{R_j}]$ is a row matrix, and it is written along the direction of the ΔX_j support displacement (corresponding to reaction R_j). The DDR becomes

$$\{\beta\}^0 = \left[B_{R_j}\right]^T \left(-\Delta X_j\right) = -\{B_{RJ}\}\Delta X_j \tag{2-39b}$$

The transpose of the row $[B_{Rj}]$ is replaced by a column $\{B_{RJ}\}$ since $[B_{Rj}]^T = \{B_{RJ}\}$. The direction of reaction R_j is opposite to the settling ΔX_j. For example, in the truss shown in Fig. 2-17, the settling of support Δv_4 at node 4 along the negative y-coordinate direction induces a reaction R_{4y} along the positive y-direction. The negative sign in the DDR given by Eq. (2-39b) accounts for the opposite direction of R_j and ΔX_j.

Equation (2-39b) is generalized for simultaneous settling of p number of supports by adding the individual contributions:

$$\{\beta\}^0 = -\left(\{B_{R1}\}\Delta X_1 + \{B_{R2}\}\Delta X_2 +, \ldots, + \{B_{RP}\}_p \Delta X_p\right) \tag{2-39c}$$

$$\underset{n\times 1}{\{\beta\}^0} = -\underset{n\times p}{[B_R]^T} \underset{p\times 1}{\{\Delta X\}} \tag{2-39d}$$

Here, the p columns of the matrix $[B_R]^T$ corresponds to the p rows of the EE matrix $[B_R]$ defined in Eq. (2-14b). After the determination of the initial deformation $\{\beta\}^0$, the method used for thermal load is adopted to calculate the response of the structure.

Settling of the Support in a Truss

The response calculation because of support settling is illustrated by considering the five-bar truss shown in Fig. 2-17 as an example. A settling of 1/2 in. is assumed for support node 4 in the negative y-coordinate direction ($\Delta v_4 = \Delta y = -0.5$ in.). The response from the settling of the support of the truss is determined in the following steps.

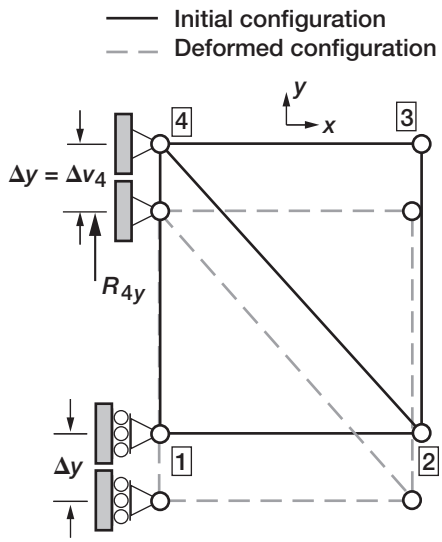

FIGURE 2-17 *Deformation due to settling of support.*

Step 1—Internal Force

For a determinate truss, the solution of the equilibrium equation ($[B]\{F\} = \{P\}$) yields the forces $\{F\}$. The settling of the support has no effect on $[B]$ and $\{P\}$. The internal force $\{F\}$ is a null vector, and no reaction is induced.

Step 2—Initial Deformation $\{\beta^0\}$

The settling corresponds to the reaction R_{4y}, which is the third reaction in the matrix equation Eq. (2-14*a*). The initial deformation for $\Delta\bar{X}_3 = \Delta v_4 = -0.5$ in. is obtained ($\{\beta\}^0 = \{B_{R3}\}\Delta\bar{X}_3$) as

$$\{\beta\}^0 = -\underbrace{\begin{Bmatrix} 0 \\ \frac{1}{\sqrt{2}} \\ 0 \\ 0 \\ 1 \end{Bmatrix}}_{\text{3rd row of } [B_R] \text{ in Eq. (2-14}a\text{)}} (-0.5) = \begin{Bmatrix} 0 \\ 0.354 \\ 0 \\ 0 \\ 0.5 \end{Bmatrix} \tag{2-40a}$$

The total deformation is equal to the initial deformation because the elastic component is zero ($\{\beta\} = \{\beta\}^t = \{\beta\}^0$).

Displacements are obtained from the solution of the DDR ($\{\beta\} = [B]^T\{X\}$).

$$\begin{Bmatrix} 0 \\ 0.354 \\ 0 \\ 0 \\ 0.5 \end{Bmatrix} = \begin{Bmatrix} 1 & 0 & 0 & 0 & 0 \\ \frac{1}{\sqrt{2}} & -\frac{1}{\sqrt{2}} & 0 & 0 & 0 \\ 0 & -1 & 1 & 0 & 0 \\ 0 & 0 & 0 & 1 & 0 \\ 0 & 0 & 0 & 0 & -1 \end{Bmatrix} \begin{Bmatrix} u_2 \\ v_2 \\ v_3 \\ u_3 \\ v_1 \end{Bmatrix} \tag{2-40b}$$

Solution to Eq. (2-40*b*) yields

$$\{X\} = \begin{Bmatrix} u_2 \\ v_2 \\ v_3 \\ u_3 \\ v_1 \end{Bmatrix} = \begin{Bmatrix} 0 \\ -0.5 \\ -0.5 \\ 0 \\ -0.5 \end{Bmatrix}_{\text{in.}} \tag{2-40c}$$

The displacements for all nodes of the truss are obtained by augmenting equations (2-40*c*) with the prescribed support settling $\{\Delta X\}^0$ and other boundary displacements:

$$\{X\}^{\text{truss}} = \{X\} + \{\Delta X\}^0$$

$$\{X\}^{\text{truss}} = \begin{Bmatrix} u_1 \\ v_1 \\ u_2 \\ v_2 \\ u_3 \\ v_3 \\ u_4 \\ v_4 \end{Bmatrix} = \begin{Bmatrix} 0.0 \\ -0.5 \\ 0.0 \\ -0.5 \\ 0.0 \\ -0.5 \\ 0.0 \\ -0.5 \end{Bmatrix} \tag{2-40d}$$

The total deformation $\{\beta\}^t$ and strain $\{\varepsilon\}^0$ are back-calculated from the DDR as $\{\beta\}^t = \{\ell\varepsilon\}^t = [B]^T\{X\}$.

$$\{\beta\}^t = \{\varepsilon\ell\}^t = \begin{Bmatrix} 1 & 0 & 0 & 0 & 0 \\ \frac{1}{\sqrt{2}} & -\frac{1}{\sqrt{2}} & 0 & 0 & 0 \\ 0 & -1 & 1 & 0 & 0 \\ 0 & 0 & 0 & 1 & 0 \\ 0 & 0 & 0 & 0 & -1 \end{Bmatrix} \begin{Bmatrix} 0 \\ -0.5 \\ -0.5 \\ 0 \\ -0.5 \end{Bmatrix} = \begin{Bmatrix} 0 \\ 0.354 \\ 0 \\ 0 \\ 0.5 \end{Bmatrix} \tag{2-40e}$$

The deformed configuration of the truss resulting from the settling of support node 4 by $-1/2$ in. in the y-coordinate direction is shown in Fig. 2-17. The entire structure undergoes uniform displacement in the negative y-coordinate direction. This motion is called rigid-body displacement of the truss. A rigid body displacement does not induce any elastic strain in the bars of the member because the total deformation is equal to the initial deformation given by Eq. (2-40e).

Response for Load, Temperature, and Support Settling

The response of a truss that is subjected to load, temperature, and support settling is obtained as the superposition of the three individual responses:

$$\text{Bar force:} \quad \{F\} = \{F\}^{\text{load}} + \{F\}^{\text{thermal}} + \{F\}^{\text{settling}} \tag{2-41a}$$

$$\text{Reaction:} \quad \{R\} = \{R\}^{\text{load}} + \{R\}^{\text{thermal}} + \{R\}^{\text{settling}} \tag{2-41b}$$

$$\text{Stress:} \quad \{\sigma\} = \{\sigma\}^{\text{load}} + \{\sigma\}^{\text{thermal}} + \{\sigma\}^{\text{settling}} \tag{2-41c}$$

$$\text{Displacement:} \quad \{X\} = \{X\}^{\text{load}} + \{X\}^{\text{thermal}} + \{X\}^{\text{settling}} \tag{2-41d}$$

$$\text{Strain:} \quad \{\varepsilon\} = \{\varepsilon\}^{\text{load}} + \{\varepsilon\}^{\text{thermal}} + \{\varepsilon\}^{\text{settling}} \tag{2-41e}$$

$$\text{Deformation} \quad \{\beta\} = \{\beta\}^{\text{load}} + \{\beta\}^{\text{thermal}} + \{\beta\}^{\text{settling}} \tag{2-41f}$$

2.11 Theory of Determinate Analysis

The theory of a determinate analysis is contained in the analysis of the five-bar truss. In subsequent chapters, this formulation is modified to solve other structure types like beams, shafts, and frames. The modifications pertain to the details of member characteristics, but the underlying theory is changed little. The analysis steps are formalized considering the example of the nine-bar determinate truss shown in Fig. 2-18.

Step 0—Sketch

The analysis of a determinate structure is centered around the equilibrium equations. The formulation of the EE requires a figure of the truss. Such a sketch depicting the geometry of the truss with the support conditions should be prepared from the coordinates of the nodes or the dimensions of the bars. In the sketch, mark the n number of internal forces $\{F\}$, m nodal displacements $\{X\}$, and m_R reactions $\{R\}$. Other response variables back-calculated include the n bar stress $\{\sigma\}$, the n bar deformations $\{\beta\}$, and the n bar strains $\{\varepsilon\}$. The solution of a determinate problem has the following four basic steps:

Step 1—Formulate the Equilibrium Equations

The EE are formulated using the sketch. Solution of the EE yields the internal forces and the reactions.

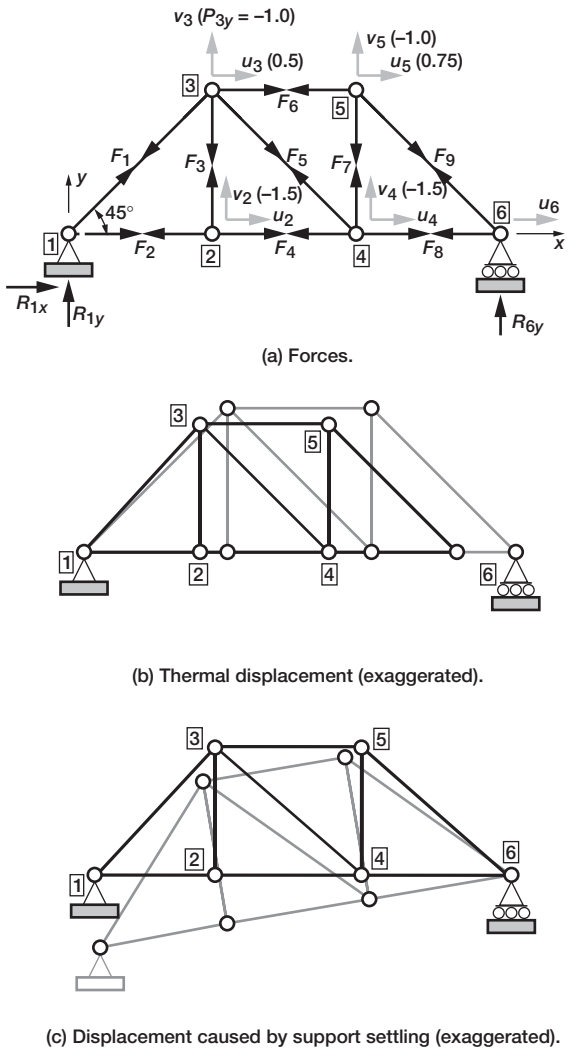

FIGURE 2-18 *Nine-bar, six-node truss.*

Step 2—Formulate the Force Deformation Relations

Deformations are calculated from the FDR.

Step 3—Formulate the Deformation Displacement Relations

Calculate displacements from the DDR.

Step 4—Back-Calculate Stress and Strain

EXAMPLE 2-7: Analysis of a Six-Node, Nine-Bar Truss

The truss shown in Fig. 2-18 is made of steel with a Young's modulus $E = 30{,}000$ ksi and a coefficient of thermal expansion $\alpha = 12 \times 10^{-6}/°\text{C}$. The coordinates, boundary conditions, loads, and member properties are given in Tables 2-2 and 2-3. The truss is also subjected to a change of temperature ($\Delta T = 50\,°\text{C}$). The support at node 1 settles by 1/2 in. along the negative y-coordinate direction. Calculate the response of the truss for the mechanical load, thermal load, support settling, and their combined effect.

Solution

Step 0—Sketch

The geometry of the truss with nodes, support conditions, external load (shown in parenthesis), internal force, and nodal displacement are depicted in Fig. 2-18. The truss has nine bar forces ($n = 9$; $F_1, F_2, \ldots, F_9$), nine displacements ($m = 9$; u_2, v_2; u_3, v_3; u_4, v_4; u_5, v_5; u_6), and three reactions ($m_R = 3$; R_{1x}, R_{1y}, R_{6y}). It is subjected to a load at node 2 in the negative y-direction ($P_{2y} = -1.5$ kip), at node 3 ($P_{3x} = 0.5$ kip, $P_{3y} = -1.0$ kip, at node 4 ($P_{4y} = -1.5$ kip), and at node 5 ($P_{5x} = 0.75$ kip, $P_{5y} = -1.0$ kip). The included angle between the bars is 45°.

TABLE 2-2 Coordinates, Load, and Boundary Restraints for the Truss in Fig. 2-18

Node	*Coordinates, In.*		*Load, kip*		*Boundary Restraints*
	x	*y*	*x*	*y*	
1	0	0	–	–	Both directions
2	100	0	–	−1.5	–
3	100	100	0.50	−1.0	–
4	200	0	–	−1.5	–
5	200	100	0.75	−1.0	–
6	300	0	–	–	*y*-direction

TABLE 2-3 Member Properties for the Truss in Fig. 2–18

Member	*Connecting Nodes*	*Area, In.*^{2}
1	1–3	1.0
2	1–2	1.0
3	2–3	0.75
4	2–4	1.0
5	3–4	0.75
6	3–5	1.0
7	4–5	0.75
8	4–6	1.0
9	5–6	1.0

Step 1—Equilibrium Equations ([B] {F} = {P})

The truss has $m = 9$ EE. The EE along the displacement directions are written as

$$(1)\ \text{along } u_2: \quad -F_2 + F_4 = 0$$

$$(2)\ \text{along } v_2: \quad F_3 - 1.5 = 0$$

$$(3)\ \text{along } u_3: \quad -\frac{F_1}{\sqrt{2}} + \frac{F_5}{\sqrt{2}} + F_6 + 0.5 = 0$$

$$(4)\ \text{along } v_3: \quad -\frac{F_1}{\sqrt{2}} - F_3 - \frac{F_5}{\sqrt{2}} - 1.0 = 0$$

$$(5)\ \text{along } u_4: \quad -F_4 - \frac{F_5}{\sqrt{2}} + F_8 = 0$$

$$(6)\ \text{along } v_4: \quad \frac{F_5}{\sqrt{2}} + F_7 - 1.5 = 0$$

$$(7)\ \text{along } u_5: \quad -F_6 + \frac{F_9}{\sqrt{2}} + 0.75 = 0$$

$$(8)\ \text{along } v_5: \quad -F_7 - \frac{F_9}{\sqrt{2}} - 1.0 = 0$$

$$(9)\ \text{along } u_6: \quad -F_8 - \frac{F_9}{\sqrt{2}} = 0$$

The EE ($[B]\{F\} = \{P\}$) in matrix notation becomes

$$\begin{array}{c} u_2: \\ v_2: \\ u_3: \\ v_3: \\ u_4: \\ v_4: \\ u_5: \\ v_5: \\ u_6: \end{array}
\begin{bmatrix}
0 & 1 & 0 & -1 & 0 & 0 & 0 & 0 & 0 \\
0 & 0 & -1 & 0 & 0 & 0 & 0 & 0 & 0 \\
\frac{1}{\sqrt{2}} & 0 & 0 & 0 & -\frac{1}{\sqrt{2}} & -1 & 0 & 0 & 0 \\
\frac{1}{\sqrt{2}} & 0 & 1 & 0 & \frac{1}{\sqrt{2}} & 0 & 0 & 0 & 0 \\
0 & 0 & 0 & 1 & \frac{1}{\sqrt{2}} & 0 & 0 & -1 & 0 \\
0 & 0 & 0 & 0 & -\frac{1}{\sqrt{2}} & 0 & -1 & 0 & 0 \\
0 & 0 & 0 & 0 & 0 & 1 & 0 & 0 & -\frac{1}{\sqrt{2}} \\
0 & 0 & 0 & 0 & 0 & 0 & 1 & 0 & \frac{1}{\sqrt{2}} \\
0 & 0 & 0 & 0 & 0 & 0 & 0 & 1 & \frac{1}{\sqrt{2}}
\end{bmatrix}
\begin{Bmatrix} F_1 \\ F_2 \\ F_3 \\ F_4 \\ F_5 \\ F_6 \\ F_7 \\ F_8 \\ F_9 \end{Bmatrix}
=
\begin{Bmatrix} 0 \\ -1.5 \\ 0.5 \\ -1.0 \\ 0 \\ -1.5 \\ 0.75 \\ -1.0 \\ 0 \end{Bmatrix}
\tag{2-42a}$$

Solution of the equation to the EE yields the forces:

$$\begin{Bmatrix} F_1 \\ F_2 \\ F_3 \\ F_4 \\ F_5 \\ F_6 \\ F_7 \\ F_8 \\ F_9 \end{Bmatrix} = \begin{Bmatrix} -2.95 \\ 3.33 \\ 1.50 \\ 3.33 \\ -0.59 \\ -2.17 \\ 1.92 \\ 2.92 \\ -4.12 \end{Bmatrix}_{\text{kip}} \tag{2-42b}$$

Reactions are calculated from the EE that are written along the directions of restraint:

$$\text{EE along } R_{1x} \text{ or } \quad u_1\text{:} \quad R_{1x} + F_2 + \frac{F_1}{\sqrt{2}} = 0$$

$$\text{Along } R_{2y} \text{ or } \quad v_1\text{:} \quad R_{1y} + \frac{F_1}{\sqrt{2}} = 0$$

$$\text{Along } R_{6y} \text{ or } \quad v_6\text{:} \quad R_{6y} + \frac{F_9}{\sqrt{2}} = 0 \tag{2-43a}$$

The EE to calculate reactions can be written in matrix notation as

$$\begin{Bmatrix} R_{1x} \\ R_{1y} \\ R_{6y} \end{Bmatrix} = \begin{bmatrix} -\frac{1}{\sqrt{2}} & -1 & 0 \\ -\frac{1}{\sqrt{2}} & 0 & 0 \\ 0 & 0 & -\frac{1}{\sqrt{2}} \end{bmatrix} \begin{Bmatrix} F_1 \\ F_2 \\ F_9 \end{Bmatrix} = \begin{Bmatrix} -1.25 \\ 2.08 \\ 2.92 \end{Bmatrix}_{\text{kip}} \tag{2-43b}$$

The accuracy of the reactions is ascertained from the overall EE.

$$\sum_x (P + R) = 0 \quad R_{1x} + P_{3x} + P_{5x} = 0$$

$$-1.25 + 0.5 + 0.75 = 0$$

$$\sum_y (P + R) = 0 \quad R_{1y} + R_{6y} + P_{2y} + P_{3y} + P_{4y} + P_{5y} = 0$$

$$2.08 + 2.92 - 1.5 - 1.0 - 1.5 - 1.0 = 0$$

$$\sum_{\text{node 1}} M_P + M_R = 0 \quad R_{6y} \times 300 + P_{2y} \times 100 + P_{3y} \times 100 + P_{4y} \times 200 +$$

$$P_{5y} \times 200 - P_{3x} \times 100 - P_{5x} \times 100 = 0$$

$$100(3 \times 2.92 - 1.5 - 1.0 - 2 \times 1.5 - 2 \times 1 - 0.5 - 0.75) = 0$$

Step 2—Force Deformation Relations ($\{\beta\} = [\mathbf{G}]\{\mathbf{F}\}$)

The deformations for mechanical load are obtained from the FDR:

$$\beta_1 = \left(\frac{F\ell}{AE}\right)_1 = -\frac{2.95 \times 100\sqrt{2}}{1 \times 30{,}000} = -1.39 \times 10^{-2}\ \text{in.}$$

$$\beta_2 = \left(\frac{F\ell}{AE}\right)_2 = \frac{3.33 \times 100}{1 \times 30{,}000} = 1.11 \times 10^{-2}\ \text{in.}$$

$$\beta_3 = \left(\frac{F\ell}{AE}\right)_3 = \frac{1.5 \times 100}{0.75 \times 30{,}000} = 6.67 \times 10^{-3}\ \text{in.}$$

$$\beta_4 = \left(\frac{F\ell}{AE}\right)_4 = \frac{3.33 \times 100}{1 \times 30{,}000} = 1.11 \times 10^{-2}\ \text{in.}$$

$$\beta_5 = \left(\frac{F\ell}{AE}\right)_5 = -\frac{0.59 \times 100\sqrt{2}}{0.75 \times 30{,}000} = -3.70 \times 10^{-3}\ \text{in.}$$

$$\beta_6 = \left(\frac{F\ell}{AE}\right)_6 = -\frac{2.17 \times 100}{1 \times 30{,}000} = -7.23 \times 10^{-3}\ \text{in.}$$

$$\beta_7 = \left(\frac{F\ell}{AE}\right)_7 = \frac{1.92 \times 100}{0.75 \times 30{,}000} = 8.53 \times 10^{-3}\ \text{in.}$$

$$\beta_8 = \left(\frac{F\ell}{AE}\right)_8 = \frac{2.92 \times 100}{1 \times 30{,}000} = 9.73 \times 10^{-3}\ \text{in.}$$

$$\beta_9 = \left(\frac{F\ell}{AE}\right)_9 = -\frac{4.12 \times 100\sqrt{2}}{1 \times 30{,}000} = -1.94 \times 10^{-2}\ \text{in.} \qquad (2\text{-}44a)$$

Step 3—Deformation Displacement Relations ($[\mathbf{B}]^{\mathbf{T}}\{\mathbf{X}\} = \{\beta\}$)

Nodal displacements are calculated from the DDR.

$$\begin{Bmatrix} \beta_1 \\ \beta_2 \\ \beta_3 \\ \beta_4 \\ \beta_5 \\ \beta_6 \\ \beta_7 \\ \beta_8 \\ \beta_9 \end{Bmatrix} = \begin{bmatrix} 0 & 0 & \frac{1}{\sqrt{2}} & \frac{1}{\sqrt{2}} & 0 & 0 & 0 & 0 & 0 \\ 1 & 0 & 0 & 0 & 0 & 0 & 0 & 0 & 0 \\ 0 & -1 & 0 & 1 & 0 & 0 & 0 & 0 & 0 \\ -1 & 0 & 0 & 0 & 1 & 0 & 0 & 0 & 0 \\ 0 & 0 & -\frac{1}{\sqrt{2}} & \frac{1}{\sqrt{2}} & \frac{1}{\sqrt{2}} & -\frac{1}{\sqrt{2}} & 0 & 0 & 0 \\ 0 & 0 & -1 & 0 & 0 & 0 & 1 & 0 & 0 \\ 0 & 0 & 0 & 0 & 0 & -1 & 0 & 1 & 0 \\ 0 & 0 & 0 & 0 & -1 & 0 & 0 & 0 & 1 \\ 0 & 0 & 0 & 0 & 0 & 0 & -\frac{1}{\sqrt{2}} & \frac{1}{\sqrt{2}} & \frac{1}{\sqrt{2}} \end{bmatrix} \begin{Bmatrix} u_2 \\ v_2 \\ u_3 \\ v_3 \\ u_4 \\ v_4 \\ u_5 \\ v_5 \\ u_6 \end{Bmatrix} = \begin{Bmatrix} -1.39 \\ 1.11 \\ 6.67 \\ 1.11 \\ -3.70 \\ -7.23 \\ 8.53 \\ 9.73 \\ -1.94 \end{Bmatrix} \times 10^{-2}$$

(2-44*b*)

Solution of the DDR yields the displacements:

$$\{X_i\} = \begin{Bmatrix} X_1 = u_2 \\ X_2 = v_2 \\ X_3 = u_3 \\ X_4 = v_3 \\ X_5 = u_4 \\ X_6 = v_4 \\ X_7 = u_5 \\ X_8 = v_5 \\ X_9 = u_6 \end{Bmatrix} = \begin{Bmatrix} 11.11 \\ -53.98 \\ 27.67 \\ -47.31 \\ 22.22 \\ -47.52 \\ 20.45 \\ -39.00 \\ 31.94 \end{Bmatrix}_{\text{in.}} \times 10^{-3} \tag{2-44c}$$

Step 4—Back-Calculate Stress and Strain

Stress is calculated from the bar force and area ($\sigma = F/A$). Strain is obtained from Hooke's law ($\varepsilon = \sigma/E$).

$$\{\sigma\} = \begin{Bmatrix} \sigma_1 = \frac{F_2}{A_2} \\ \sigma_2 = \frac{F_1}{A_1} \\ \sigma_3 = \frac{F_3}{A_3} \\ \sigma_4 = \frac{F_4}{A_4} \\ \sigma_5 = \frac{F_5}{A_5} \\ \sigma_6 = \frac{F_6}{A_6} \\ \sigma_7 = \frac{F_7}{A_7} \\ \sigma_8 = \frac{F_8}{A_8} \\ \sigma_9 = \frac{F_9}{A_9} \end{Bmatrix} = \begin{Bmatrix} -2.95 \\ 3.33 \\ 2.0 \\ 3.33 \\ -0.79 \\ -2.17 \\ 2.56 \\ 2.92 \\ -4.12 \end{Bmatrix}_{\text{ksi}} \qquad \{\varepsilon\} = \frac{1}{E}\{\sigma\} = \begin{Bmatrix} -0.098 \\ 0.111 \\ 0.066 \\ 0.111 \\ -0.026 \\ -0.072 \\ 0.085 \\ 0.097 \\ -0.137 \end{Bmatrix} \times 10^{-3}$$

(2-44d)

Thermal Load

The change in temperature has no effect on the internal force, reaction, and stress. It induces total strain, deformation, and displacement. Total strain $\{\varepsilon\}^t$ is equal to thermal strain $\{\varepsilon\}^t = (\{\varepsilon\}^T)$ because there is no elastic strain ($\{\varepsilon\}^e = \{0\}$). Initial deformation is calculated as $\beta_i^0 = (\ell\varepsilon^T)_i = (\ell\alpha\Delta T)_i$. Displacements are determined from the DDR ($\{\beta\}^0 = [B]^T\{X\}$).

$$\{\varepsilon\}^t = \{\varepsilon\}^T = \{\alpha\Delta t\} = \begin{Bmatrix} 0.6 \\ 0.6 \\ 0.6 \\ 0.6 \\ 0.6 \\ 0.6 \\ 0.6 \\ 0.6 \\ 0.6 \end{Bmatrix} \times 10^{-3} \quad \{\beta\}^0 = \{\ell\varepsilon^t\} = \begin{Bmatrix} \sqrt{2} \\ 1 \\ 1 \\ 1 \\ \sqrt{2} \\ 1 \\ 1 \\ 1 \\ \sqrt{2} \end{Bmatrix} \times \left(6 \times 10^{-2}\right) \quad (2\text{-}45a)$$

Substitution of the initial deformation $\{\beta\}$ in the DDR of Step 3 given by Eq. (2-44*b*) and solution yield the displacements.

$$\{X\}^{\text{all nodes}} = \begin{Bmatrix} u_1 \\ v_1 \\ u_2 \\ v_2 \\ u_3 \\ v_3 \\ u_4 \\ v_4 \\ u_5 \\ v_5 \\ u_6 \\ v_6 \end{Bmatrix} = \begin{Bmatrix} 0.00 \\ 0.00 \\ 60.00 \\ 0.00 \\ 60.00 \\ 60.00 \\ 120.00 \\ 0.00 \\ 120.00 \\ 60.00 \\ 180.00 \\ 0.00 \end{Bmatrix} \times 10^{-3}\ \text{in.} \quad (2\text{-}45b)$$

The nodal displacements are graphed in Fig. 2-18*b*. It consists of a uniform expansion in the *y*-direction. In the *x*-direction, the displacement is proportional to the bar length along the bottom chord. The displacement along the *x*-direction peaks at node 6 at $u_6 = 0.18$ in. The thermal displacements confirm to the boundary conditions. Because the truss is restrained along the *y* coordinate direction at both the boundary nodes 1 and 6, it moves at nodes (3 and 5) along the *y*-direction. It moves along the *x*-direction at node 6 because it is a roller support.

Support Settling

The settling of a support has no effect on the internal force, reaction, and stress. It induces total strain, deformation, and displacement in the structure. Total strain ($\{\varepsilon\}^t$) and initial strain ($\{\varepsilon\}^0$) are equal ($\{\varepsilon\}^t = \{\varepsilon\}^0$) because there is no elastic strain ($\{\varepsilon\}^e = \{0\}$). Initial deformation caused by the settling of node along the *y*-direction is calculated as

$$\{\beta\}^0 = \Delta\bar{X}\{B_{R2}\} \tag{2-46a}$$

Here, $\Delta\bar{X} = -0.5$ is the settling of node 1 along the y-direction, or along the reaction R_{1y}. $\{B_{R2}\}$ is the second row in Eq. (2-43b). It is the EE along the reaction R_{1y}.

$$\begin{Bmatrix} \beta_1 \\ \beta_2 \\ \beta_3 \end{Bmatrix}^0 = -0.5 \begin{Bmatrix} -\frac{1}{\sqrt{2}} \\ 0 \\ 0 \end{Bmatrix}_{\text{in.}} \tag{2-46b}$$

The full deformation vector $\{\beta\}^0$ is obtained by adding zero for the other components.

$$\{\beta\}^0 = \begin{Bmatrix} \beta_1 \\ \beta_2 \\ \beta_3 \\ \beta_4 \\ \beta_5 \\ \beta_6 \\ \beta_7 \\ \beta_8 \\ \beta_9 \end{Bmatrix}^0 = \begin{Bmatrix} 0.35 \\ 0 \\ 0 \\ 0 \\ 0 \\ 0 \\ 0 \\ 0 \\ 0 \end{Bmatrix}_{\text{in.}} \quad \{\varepsilon\}^0 = \begin{Bmatrix} \dfrac{\beta^0}{\ell} \end{Bmatrix} = \begin{Bmatrix} 2.48 \times 10^{-3} \\ 0 \\ 0 \\ 0 \\ 0 \\ 0 \\ 0 \\ 0 \\ 0 \end{Bmatrix} \tag{2-47a}$$

Substituting for $\{\beta\}^0$ in the DDR ($\{\beta\}^0 = [B]^T\{X\}^0$) of Step 3 and solving yields the displacements. The displacements at the support nodes are added to obtain the displacements for all nodes, as follows:

$$\{X\}^{\text{all nodes}} = \begin{Bmatrix} u_1 \\ v_1 \\ u_2 \\ v_2 \\ u_3 \\ v_3 \\ u_4 \\ v_4 \\ u_5 \\ v_5 \\ u_6 \\ v_6 \end{Bmatrix} = \begin{Bmatrix} 0.00 \\ -0.50 \\ 0.00 \\ -0.33 \\ -0.16 \\ -0.33 \\ 0.00 \\ -0.16 \\ -0.16 \\ -0.16 \\ 0.00 \\ 0.00 \end{Bmatrix}_{\text{in.}} \tag{2-47b}$$

The displaced structure caused by the settling of node 1 is shown in Fig. 2-18c. The structure rotates with node 6 as the center. Displacements along the negative y-direction at nodes 4 and 2 are proportional to their distance from node 6. Nodes 3 and 5 tilt by the same amount along the negative x-direction.

2.12 Definition of Determinate Truss

Consider a two-dimensional truss with n bars and m nodes. The truss must be stable for analysis. It is stable when it is supported at least at two nodes and one node has two restraints. One restraint must be along the x-direction to prevent its motion as a rigid body along that direction. Likewise, another restraint along the y-direction prevents such motion along the y-direction. The third restraint prevents the rigid body rotation in the x–y plane. It has a total of three nodal restraints ($m_r = 3$) and three reactions. Its displacement degree-of-freedom is $\text{dof} = 2m - m_r = 2m - 3$. Its number of bar forces is n, and its number of reactions is $m_r = 3$. A truss is determinate when its n bar forces and three reactions can be determined only from an application of the equations of equilibrium. Determinacy of a stable truss is separated into external determinacy and internal determinacy.

1. *External determinacy*: A truss is externally determinate provided the total number of nodal restraints is equal to three ($m_r = 3$) and there are three reactions. This is referred to as the *rule of reaction*.
2. *Internal determinacy*: A truss is internally determinate provided the number of bar forces is equal to the displacement degree-of–freedom ($n = 2m - m_r = \text{dof}$). This we will refer to as the *member rule*.
3. A determinate truss must be stable and satisfy both the reaction and member rules.

Consider the N-truss shown in Fig. 2-19*a*. It has 17 bars ($n = 17$), 10 nodes ($m = 10$), 3 support restraints ($m_r = 3$), and 3 reactions (R_{1x}, R_{1y}, R_{9y}). Its dof is 17 ($\text{dof} = 2 \times 10 - 3 = 17$). The truss satisfies the reaction rule ($m_r = 3$) and the member rule ($\text{dof} = n = 17$). It is a stable, determinate truss.

The N-truss shown in Fig. 2-19*b* has one restraint along the y-coordinate direction at each of its three nodes (1, 5, 9). Both the reaction rule ($m_r = 3$) and the member rule ($\text{dof} = 17 = n$) are satisfied. However, it is an unstable truss because it can roll along the x-coordinate direction. The analysis of unstable trusses is not included in strength of materials analysis.

Consider the two-bar truss. It has three nodes ($m = 3$), two members ($n = 2$), two restraints each at node (2 and 3) ($m_r = 4$), and four reactions (R_{2x}, R_{2y}, R_{3x}, R_{3y}). It appears to fail the reaction rule but passes the member rule ($\text{dof} = 2 = n$). The truss, by definition, may not be considered externally determinate.

The two-bar truss is determinate. This is because of additional available information. The direction of the reaction must be along the bar. At node 2, the reaction is along bar 1, which connects nodes 1 and 2; and at node 3, the reaction is along the bar 3, which connects nodes 1 and 3. The two bar forces can be calculated from two EE written at node 1. The EE at the support yield the reactions.

Consider next the case when node 3 is on a roller support as shown in Fig. 2-19*c*. This case satisfies the reaction rule because $m_r = 3$, but the truss is unstable because the support condition cannot resist a horizontal reaction component resulting from the force in bar 2.

Consider the cantilevered N-truss shown in Fig. 2-19*d*. It satisfies both the reaction rule ($m_r = 3$) and the member rule ($\text{dof} = n = 17$). The truss is unstable because it has an unstable bay, as marked in Fig. 2-18*d*.

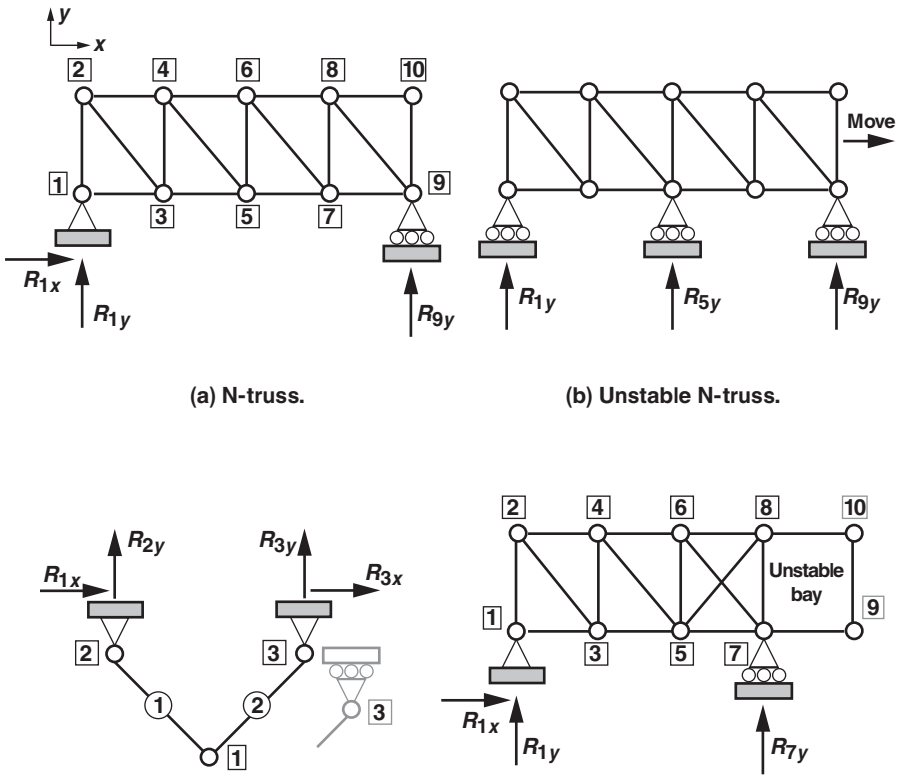

(a) N-truss. (b) Unstable N-truss.

(c) Two-bar truss. (d) Cantilevered N-truss.

FIGURE 2-19 *Determinate truss.*

The member and reaction rules may have some limitations, but they perform satisfactorily for regular types of trusses. For a determinate truss, the equilibrium matrix $[B]$ is a square matrix with a nonzero determinant, or it is a nonsingular square matrix.

Calculation of Force in an Individual Bar

The force in an individual bar in a determinate truss can be calculated without analyzing the entire structure. This is possible because the bar force depends on load and the truss geometry but it is independent of the bar area and material. The method of section can be followed for the calculation. A section is taken through the bar in question. Next a free body is separated. The equilibrium of forces acting on the free body yield the bar force. Reactions, if required, can be determined from the overall EE. Force calculation in an individual bar can be used to verify an available analysis result or in the redesign of a critical member. The method cannot be extended to calculate the displacement at a node of a truss because displacement is dependent on bar area and material and it is a global variable. The method is illustrated by considering an example.

EXAMPLE 2-8: Bar Force in a Truss

A 17-bar, 10-node truss with a span of 20 m and a height of 2 m is shown in Fig. 2-20*a*. It is subjected to a load ($P = 10\,\text{kN}$) at node 9 along the negative y-coordinate direction. Calculate the forces in bars 10, 11, and 12, and in bars 5 and 7.

Forces in Bars (10, 11, and 12)

Take a section (C_1–C_1) that cuts the group of bars as shown in Fig. 2-20*a*. A free body can be taken either to the left or right of C_1–C_1. The right free body shown in Fig. 2-20*b* is preferred because this portion is not associated with any reaction. The bar forces and loads marked in this free body are in equilibrium. Bar forces are calculated from the EE.

Force F_{10}: The moment at node 8 yields F_{10}.

$$M_8 = 0: \quad -2F_{10} - 5 \times 10 = 0$$
$$F_{10} = -25\,\text{kN} \tag{2-48a}$$

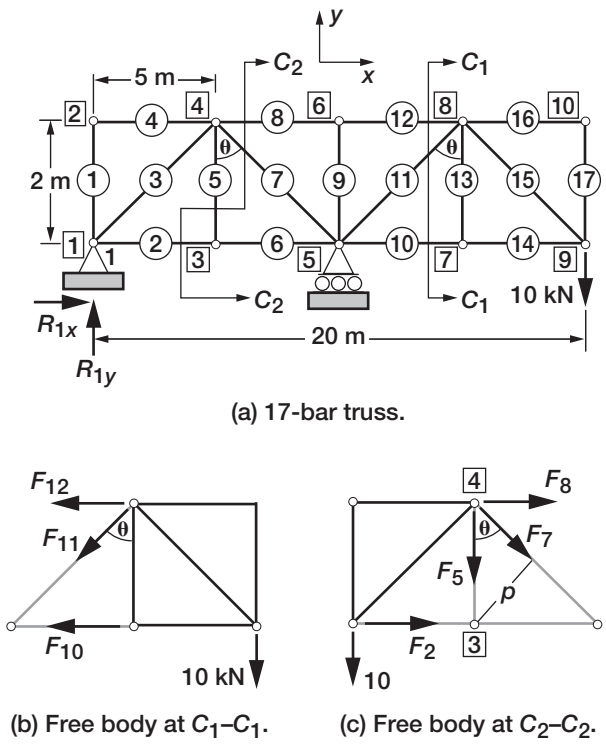

(a) 17-bar truss.

(b) Free body at C_1–C_1.

(c) Free body at C_2–C_2.

FIGURE 2-20 *Method of section for a truss.*

Force F_{12}: The moment at node 5 yields F_{12}.

$$M_5 = 0: \quad 2F_{12} - 10 \times 10 = 0$$

$$F_{12} = 50\,\text{kN} \tag{2-48b}$$

Force F_{11}: The EE along the y-coordinate direction yields F_{11}.

$$\sum_Y F = 0: \quad -F_{11}\cos\theta - 10 = 0$$

$$F_{11} = -10/\cos\theta$$

$$\cos\theta = \frac{2}{\sqrt{2^2 + 5^2}} = 0.37$$

$$\sin\theta = 0.93$$

$$F_{11} = -27\,\text{kN} \tag{2-48c}$$

The accuracy of the calculation is ascertained from the three EE written for the entire free body shown in Fig. 2-20*b*.

$$\sum_x F = 0: \quad -(F_{10} + F_{12} + F_{11}\sin\theta) = 0$$

$$-(-25 + 50 - 25) = 0$$

$$\sum_Y F = 0: \quad -(F_{11}\cos\theta + 10) = 0$$

$$-(-10 + 10) = 0$$

$$M_5 = 0: \quad -2F_{12} + 10 \times 10 = 0$$

$$-100 + 100 = 0 \tag{2-48d}$$

Forces in Bars (5 and 7)

Take a section (C_2–C_2) that cuts the bars as shown in Fig. 2-20*a*. The left free body shown in Fig. 2-20*c* is considered. It has two reactions (R_{1x} and R_{1y}). The reactions are calculated from the overall EE for the truss shown in Fig. 2-20*a*.

$$\sum_x F = 0: \quad R_{1x} = 0 \tag{2-49a}$$

$$M_5 = 0: \quad -\left(R_{1y} \times 10 + 10 \times 10\right) = 0$$

$$R_{1y} = -10\,\text{kN} \tag{2-49b}$$

The bar forces and reactions are marked in the free-body diagram shown in Fig. 2-20*c*.

Force F_2: The moment at node 4 yields F_2.

$$M_4 = 0: \quad 2F_2 + 10 \times 5 = 0$$

$$F_2 = -25\,\text{kN} \tag{2-49c}$$

Calculation of F_7 requires the values for F_8 and F_5. In other words, all three forces (F_4, F_8, and F_7) have to be calculated simultaneously as the solution to the three equations consisting of $M_3 = 0$ and the EE along the x- and y-coordinate directions.

$$M_3 = 0: \quad -2F_8 + 5 \times 10 - pF_7 = 0$$

$$\sum\nolimits_x F = 0: \quad F_2 + F_8 + F_7 \sin\theta = 0$$

$$\sum\nolimits_y F = 0 \quad -(10 + F_5 + F_7 \cos\theta) = 0$$

The three EE and $F_2 = -25$, yield the bar forces.

$$F_8 = 50$$
$$F_7 = 0$$
$$F_5 = -27\,\text{kN} \tag{2-49d}$$

Standard Shape of a Bar Member

To construct a truss, designers can select bar members from the standard rolled shapes adopted by the American Institute of Steel Construction. Of course, other materials and shapes desired by the designer can be used. A design course addresses the properties of many different types of available rolled shapes. We introduce two properties relevant to analysis: the net cross-sectional area and the equivalent cross-section of a bar member.

Net Cross-Sectional Area

A truss is manufactured by fastening bar members by bolting, riveting, or welding. The fastening process reduces the cross-sectional area of a bar. Consider, for example, the angle section of lengths L_1 and L_2 and thickness t, shown in Fig. 2-21. It is traditionally specified as $L_1 \times L_2 \times t$. Its gross area (A_g) and net area (A_n) are calculated as follows:

$$A_g = (L_1 + L_2 - t)t \tag{2-50a}$$

$$A_n = 0.85A_g \tag{2-50b}$$

The reduction (t^2) in Eq. (2-50a) accounts for the rounding of the corners. Analysis, preferably, should use net area, which is less than the gross area ($A_n < A_g$). Net area (A_n) can be calculated by reducing the gross area to account for the effect of fastening. For example, if the truss is fastened by rivets the areas of such holes must be accounted. The gross area is reduced to obtain the net area ($A_n < A_g$) using an approximate reduction factor of 85 percent as ($A_n = 0.85A_g$) for angle sections.

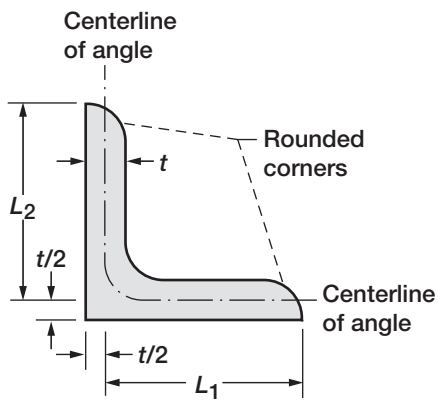

FIGURE 2-21 *Dimensions of an angle section.*

EXAMPLE 2-9: Net Area of Angle Section

For the angle iron ($6 \times 4 \times 0.25$) shown in Fig. 2-21, calculate the gross area and the net cross-sectional areas.

$$L_1 = 6\,\text{in.}$$
$$L_2 = 4\,\text{in}$$
$$t = 0.5\,\text{in.}$$
$$A_g = (6 + 4 - 0.5) \times 0.5 = 4.75\,\text{in}^2$$
$$A_n = 0.85 \times 4.75 = 4.04\,\text{in}^2 \tag{2-51}$$

In the analysis of a truss made of angle iron, the net area ($A_n = 4.04\,\text{in.}^2$) is used. Net area depends on the shape of the cross-section, such as angle section, T section, channel section, I-section, round or circular bar, square pipe, and others, as well as on the nature of the fastening. In case details are not available, then analysis should proceed either assuming the net area from the formula given by Eq. (2-50b), or even the gross area can be used.

Equivalent Cross-Sectional Area

A truss member can be made of two or more different materials, such as steel and aluminum. What is the area of the bar for the purpose of analysis? In the analysis of a composite bar any one material can be selected as the base material. The bar cross-section is then transformed in terms of the base material.

Consider a bimetallic bar, shown in Fig. 2-22*a* as an example. It is made of an inner aluminum core of diameter d_a and an outer steel shell of diameter d_s, as depicted in Fig.2-22*b*. It is assumed that the bar is adequately designed to act as a single integral unit throughout its use without any gap or debonding at the aluminum-steel interface, from the support point at *A* to the load application point at *B*. An equal strain concept is used to calculate the equivalent cross-sectional area. According to this concept, the induced strain at any location in the interface is the same in steel and in aluminum. At the interface the stress (which is a product of strain and modulus) is not the same for the two materials.

Consider a small segment of the bar of length *a*, as shown in Fig. 2-22*c*. The strain (ε) in steel ($\varepsilon_s = \varepsilon$) is identical to that in aluminum ($\varepsilon_a = \varepsilon$). The segment has equal deformation

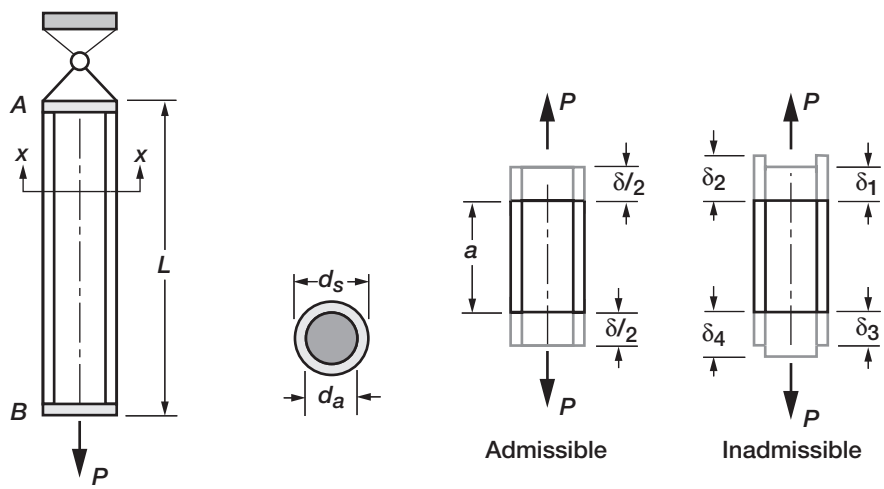

(a) Bimetallic bar. (b) Section at *x–x*. (c) Deformation.

FIGURE 2-22 *Deformation in a composite bar.*

($\delta = a\varepsilon = a\varepsilon_s = a\varepsilon_a$). This admissible state of expansion ($\delta/2$) at each end is marked in Fig. 2-22*c*. The inadmissible deformation, which is caused by uneven expansions in steel (δ_2 and δ_3) and aluminum (δ_1 and δ_4), is marked in Fig. 2-22*c*. The differential deformation induces different strains at the interface of aluminum and steel materials ($\varepsilon_s \neq \varepsilon_a$), and this is not admissible.

The stresses in steel and aluminum are related to the strain through Hooke's law.

$$\sigma^a = \varepsilon E_a$$

$$\sigma^s = \varepsilon E_s \tag{2-52a}$$

Force in aluminum ($F_a = A_a\sigma^a$) and in steel ($F_s = A_s\sigma^s$) are in equilibrium with the load ($F_a + F_s = P$). The EE in terms of the stress can be written as

$$A_a\sigma^a + A^s\sigma^s = P$$

$$A_aE_a\varepsilon + A^s\varepsilon E_s = P$$

$$\varepsilon(A_aE_a + A_sE_s) = P$$

$$\varepsilon E_a(A_a + A_sE_s/E_a) = P$$

$$\varepsilon E_s(A_s + A_aE_a/E_s) = P$$

$$\sigma_a(A_a + A_sE_s/E_a) = \sigma_s(A_s + A_aE_a/E_s) = P \tag{2-52b}$$

The load is equated with the aluminum equivalent area (A_{ae}) and steel (A_{as}) as

$$\sigma_aA_{ae} = P$$

$$\sigma_sA_{se} = P \tag{2-52c}$$

The equivalent areas for aluminum (A_{ae}) and steel (A_{as}) are defined as

$$A_{ae} = A_a + A_s\frac{E_s}{E_a} \tag{2-52d}$$

$$A_{as} = A_s + A_a\frac{E_a}{E_s} \tag{2-52e}$$

The aluminum equivalent area is defined as the sum of the aluminum area added to the steel area that is prorated by the ratio of the elastic modulus of steel to aluminum. The steel equivalent area is likewise defined. When a bar is made of different materials, the base material must be selected: for example, consider this to be steel. The analysis should use the base material (steel) and its equivalent area (steel equivalent area).

EXAMPLE 2-10: A Composite Bar

The composite shaft shown in Fig. 2-22*a* carries a load ($P = 10\,\text{kip}$). Calculate the equivalent area and the internal forces in steel and aluminum for a shaft with a length of 100 in., diameters of $d_s = 4$ in. and $d_a = 3$ in., and moduli of $E_s = 30$ million psi and $E_a = 10$ million psi.

The ratios (R) of the modulus, areas for aluminum (A_a), steel (A_s), gross area, and equivalent area for aluminum (A_{ae}) and steel (A_{se}) are calculated as

$$
\begin{aligned}
R &= \frac{E_s}{E_a} = 3 \\
A_a &= \pi \frac{d_a^2}{4} = 7.07\,\text{in.}^2 \\
A_s &= \frac{\pi}{4}\left(d_s^2 - d_a^2\right) = 5.5\,\text{in.}^2 \\
A_g &= A_a + A_s = 12.57\,\text{in.}^2 \\
A_{ae} &= 7.07 + R \times 5.5 = 23.57\,\text{in.}^2 \\
A_{se} &= 5.5 + 7.07/R = 7.86\,\text{in.}^2
\end{aligned} \tag{2-53}
$$

The geometrical area of the cross-section is $A_g = 12.57\,\text{in.}^2$. The aluminum equivalent area at $A_{ae} = 23.57\,\text{in.}^2$ is more than the geometrical area ($A_g = 12.57\,\text{in.}^2$). The steel equivalent area at $A_{se} = 7.86\,\text{in.}^2$) is less than the geometrical area ($A_g = 12.57\,\text{in.}^2$).

The strain, which is the same for both materials, is obtained as

$$
\begin{aligned}
\varepsilon_a &= \frac{\sigma}{E} = \left(\frac{P}{A_{ae}}\right)\frac{1}{E_a} = \frac{10 \times 10^3}{23.57 \times 10 \times 10^6} = 42.43 \times 10^{-6} \\
\varepsilon_s &= \left(\frac{P}{A_{se}}\right)\left(\frac{1}{E_s}\right) = \frac{10 \times 10^3}{7.86 \times 30 \times 10^6} = 42.43 \times 10^{-6} \\
\varepsilon &= \varepsilon_a = \varepsilon_s
\end{aligned} \tag{2-54a}
$$

The stress and internal force in steel are obtained as

$$\sigma_s = E_s\varepsilon = 30 \times 10^6 \times 42.43 \times 10^{-6} = 1273\,\text{psi} \tag{2-54b}$$

$$F_s = A_s\sigma_s = 5.5 \times 1273 = 7.0\,\text{kip} \tag{2-54c}$$

The stress and internal force in aluminum are obtained as

$$\sigma_a = E_a\varepsilon = 10 \times 10^6 \times 42.43 \times 10^{-6} = 424.3\,\text{psi} \tag{2-54d}$$

$$F_a = A_a\sigma_a = 7.7 \times 424.3 = 3.0\,\text{kip} \tag{2-54e}$$

The internal forces in the steel and aluminum sections add up to the applied load ($F_s + F_a = P$).

Load sharing in a composite bar is proportional to the elastic modulus times the area of the material (AE). The steel part, with a higher coefficient ($A_sE_s = 165 \times 10^6$), carries more load. The load fraction is obtained as the ratio ($A_sE_s/(A_sE_s + A_aE_a) = 165/235.7 = 0.7$), or it carries 70 percent of the load. The aluminum material, with a lower coefficient ($AE_a = 70.7 \times 10^6$) carries ($70.7/235.7 = 0.3$), or 30 percent of the load.

The axial deformation ($\beta = \ell\varepsilon$) is obtained as the product of strain and bar length.

$$\delta = \varepsilon\ell = 42.43 \times 10^{-6} \times 100 = 4.24 \times 10^{-3} \text{ in.} \qquad (2\text{-}54f)$$

The axial displacement is equal to the deformation because one boundary is restrained. The axial displacement is 4.24×10^{-3} in.

Problems

Use the material properties given in Tables A5-1 and A5-2 in Appendix 5 to solve the problems.

2-1 A 30-ft-long aluminum bar is suspended from the ceiling as shown in Fig. P2-1. The bar has a uniform cross-sectional area of 1 in.^{2} It is subjected to an external load ($P = 1$ kip) and a change of temperature ($\Delta T = 100°$F). Calculate the internal force, the stress, the displacement, the deformation, the strain at the midheight of the strut, and the support reaction. Compare the response when aluminum is replaced by steel.

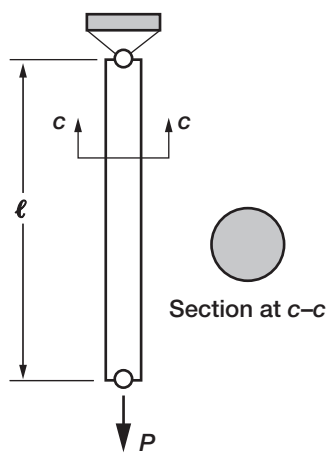

FIGURE P2-1

2-2 The composite column shown in Fig. P2-2 has three sections. The base section is made of concrete, the middle section of steel, and the top section of aluminum. The dimensions and cross-sectional properties are marked in the figure. The column supports a compressive load of 5 kN, and the steel section is subjected to a temperature differential ($\Delta T = 250°$F). Calculate the internal force, stress, displacement, deformation, and strain at the middle of each section. Do not neglect the weight of the material.

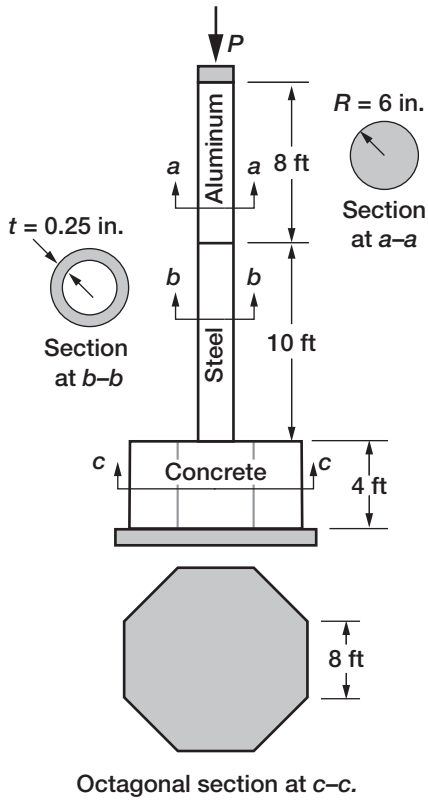

FIGURE P2-2

2-3 A composite column is made of aluminum and steel with the dimensions marked in Fig. P2-3. The upper aluminum segment is subjected to a change of temperature ($\Delta T = -250°$F), and the steel column carries a 100-kN load. Calculate the displacement at the free end of the column.

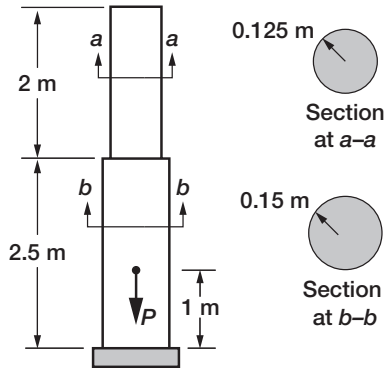

FIGURE P2-3

2-4 A wooden strut is supported by a steel and an aluminum post through a shaft as shown in Fig. P2-4. The wooden strut carries two loads ($P_1 = -2$ kip, and $P_2 = 1$ kN). The posts are subjected to a temperature differential ($\Delta T = 250°$F). The dimensions are marked in the figure. Calculate the reactions in the posts, the displacement at A, and the rotation at the center of the shaft CD. Neglect the weight.

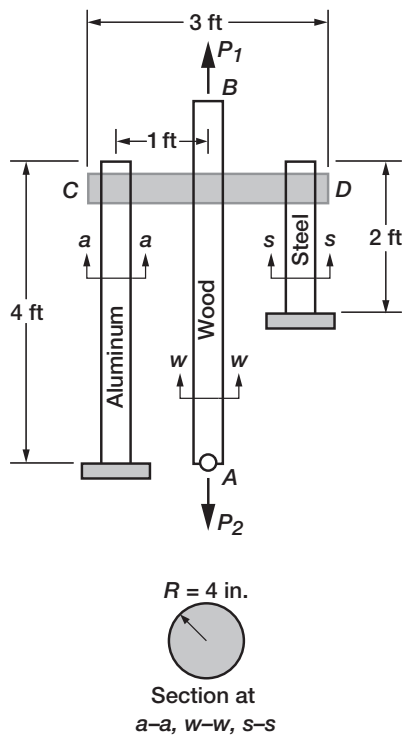

FIGURE P2-4

2-5 A two-bar, three-node steel truss is subjected to a load ($P = 1$ kip) at angle θ as shown in Fig. P2-5. Calculate the maximum values of the support reaction at node 1 as the load rotates through a full revolution ($0° \leq \theta \leq 360)°$. The problem parameters are marked in the figure.

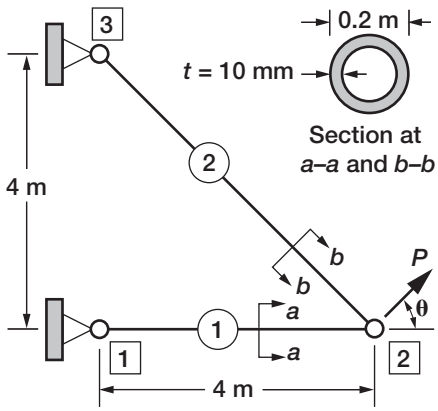

FIGURE P2-5

2-6 For the truss in Problem 2–5, calculate the response (the bar force, stress, strain, deformation, and displacement) when it is subjected to a load ($P = 1$ kip) applied at the angle $\theta = 1.5\ \pi$ rad.

2-7 Deformations have been calculated for the six-bar truss shown in Fig. P2-7 ($\beta_1 = -20$ mm, $\beta_2 = -56.6$ mm, $\beta_3 = 16.66$ mm, $\beta_4 = -47.13$ mm, $\beta_5 = 16.66$ mm, $\beta_6 = 0.0$). Draw the displacement diagram using Williot's method. Can you draw the diagram if one of the six deformations, for example β_5, is not available to you?

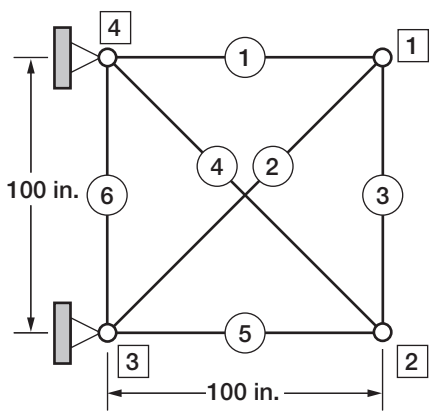

FIGURE P2-7

2-8 Draw the displacement diagram using Williot's method for the truss shown in Fig. P2-8 for the following cases.

1. For an increase in the temperature from its ambient manufacturing environment at 25°C to 100°C.
2. For settling of support node 1 by 0.5 in. in the x-coordinate direction and by 1 in. the negative y-coordinate axis at node 3.
3. For simultaneous occurrence of cases 1 and 2.

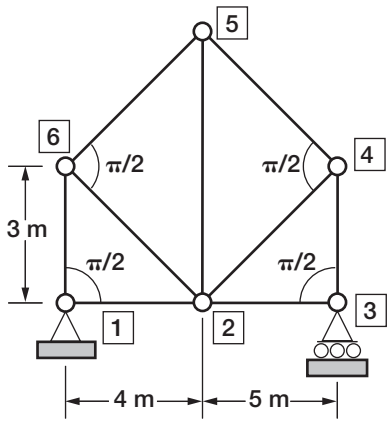

FIGURE P2-8

2-9 Calculate the response (internal force, reaction, stress, strain, deformation, and displacement) of the steel truss shown in Fig. P2-9 for the following load conditions. Assume that the areas of the inclined bars are 880 mm^2 and that those of the other bar are 500 mm^2.

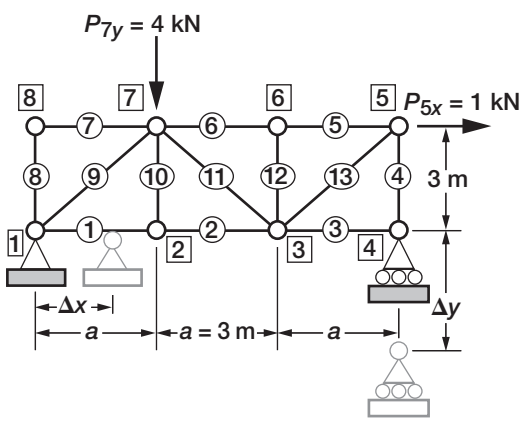

FIGURE P2-9

1. For a mechanical load as shown in the figure.
2. For a temperature increase of $\Delta T = 100°\text{C}$ for the bottom chord members (1, 2, 3).
3. For settling of support node 1 by 12 mm in the x-coordinate direction and for node 4 by 25 mm in the negative y-coordinate direction.
4. For simultaneous action of the mechanical load, thermal load, and support setting.

2-10 The steel truss shown in Fig. P2-10 is made of bars with areas of 1 in.^{2} Other dimensions are marked in the figure with $a = 3$ m. Calculate the reactions and the stresses in the bars joining nodes 8–9, 9–7, 6–10, and 10–5.

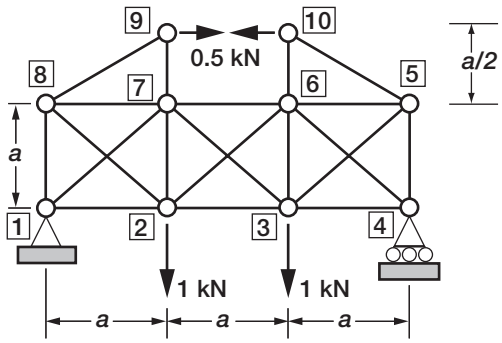

FIGURE P2-10

2-11 The roof truss shown in Fig. P2-11 is made of equal-leg steel angle sections of the dimensions $203 \times 203 \times 25.4\,\text{mm}^3$. Calculate the response in the midspan diagonal bar only (do not analyze the entire truss).

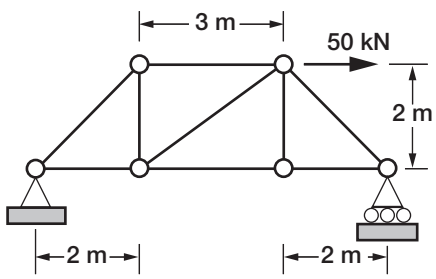

FIGURE P2-11

2-12 A composite angle section ($102 \times 51 \times 12.67\,\text{mm}^3$) made of aluminum and steel has the dimensions shown in Fig. P2-12. For each material, calculate the stress, strain, and displacement at its midlength for the following load cases.

1. A 10-kN mechanical load.
2. A uniform temperature change ($\Delta T = 50°\text{C}$) throughout its volume.
3. An axial displacement of 1 in. at its free node.

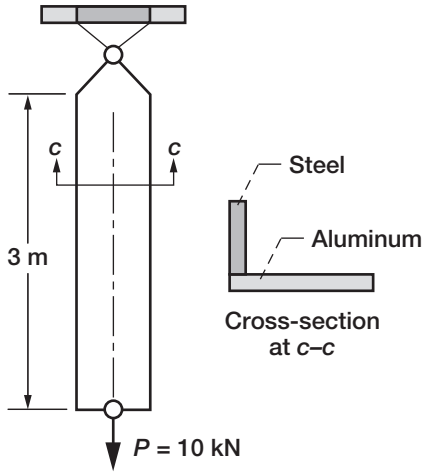

FIGURE P2-12

3 Simple Beam

A beam is a horizontal structural member that supports a vertical load. Its length is much larger than its cross-sectional area. For a typical beam, the slenderness ratio SR, defined as the ratio of length ℓ to the cross-sectional area A ($SR = \ell/A$), can be 20 or more ($SR = \ell/A \geq 20$). A beam cross-section can be rectangular, circular, or annular, or it can be a rolled I-section or a built-up section. Beams are fabricated of steel, aluminum, concrete, wood, and composite materials. They are used in buildings, bridges, aircraft, machinery, and other types of structures. A simple beam rests on two or fewer supports. A lintel placed across the space between two columns is an example of a simple beam. A cantilever projecting out of a single supporting wall is also a simple beam. Simple beams are determinate structures. In contrast, a continuous beam on more than two supports is an indeterminate structure. This chapter is devoted to the analysis of simple determinate beams.

A cantilevered beam is depicted in Fig. 3-1a. It has a length ℓ with a uniform rectangular cross-sectional area ($A = dt$), depth d, and thickness t. It is subjected to a transverse load (P). Galileo began the solid mechanics discipline around 1638 with the analysis of a cantilevered beam (see Fig. 1-37). A uniform rectangular beam resting on two supports, referred to as a simply supported beam, is depicted in Fig. 3-1b. This beam is subjected to a distributed transverse load (p) that is uniform along a portion of its span (a). Analysis of most other simple beams can be obtained as an extension of the solution of the two examples.

For analysis, a beam is sketched as a rectangle with length ℓ and depth d, as shown in Fig. 3-2a. The length ℓ is along the beam centerline, which coincides with the x-coordinate axis. The y-coordinate axis coincides with the beam depth d. The thickness, or width, of the beam, which is along the z-coordinate axis, plays a passive role in the analysis and is not shown in the sketch. The beam cross-section must be symmetrical about the y-axis. The cross-section can be rectangular, circular, annular, or a rolled I-section, as shown in Fig. 3-2b. In general, a beam section need not be geometrically symmetrical about the z-coordinate

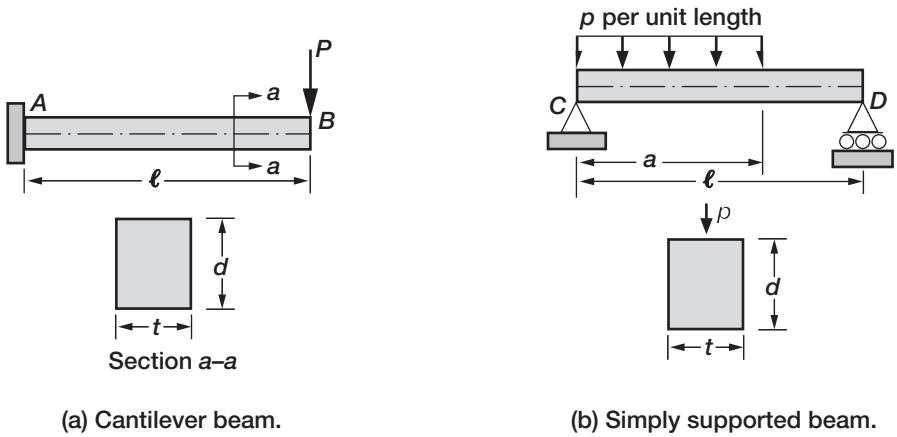

(a) Cantilever beam.

(b) Simply supported beam.

FIGURE 3-1 *Example of simple beams.*

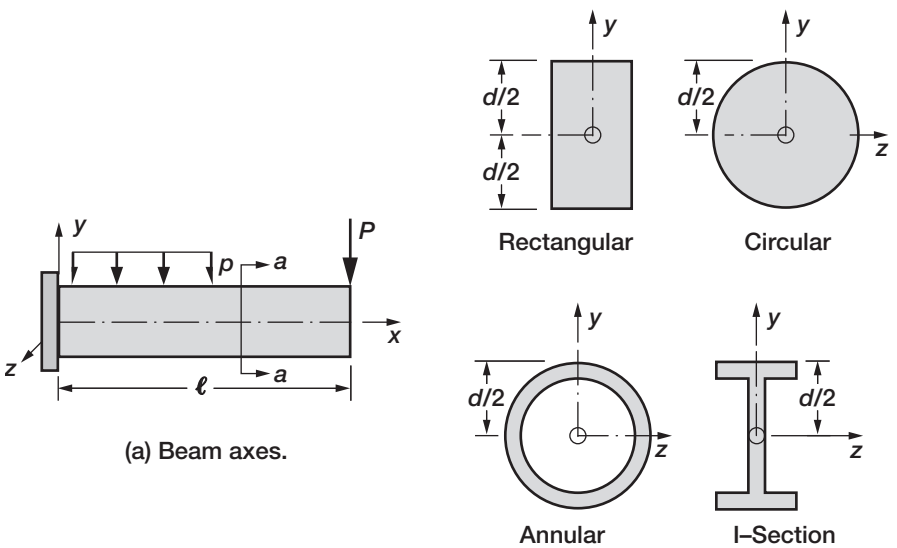

(a) Beam axes.

(b) Symmetrical beam cross-sections.

FIGURE 3-2 *Beam coordinate axes.*

axis, but in this chapter it will be thus assumed. In other words, the beam section is assumed to be symmetrical about both the y- and z-coordinate axes. The x-z plane, which cuts the beam into two equal halves, is referred to as the neutral plane, as shown in Fig. 3-3. Since the beam thickness is not shown in a typical sketch, engineers popularly refer to the x-axis as the neutral axis, but they actually imply the neutral plane.

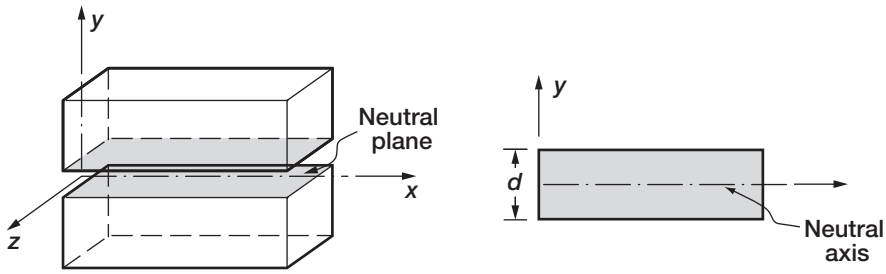

FIGURE 3-3 *Neutral plane of a beam.*

Analysis of beam is more involved than truss analysis because its response variables are functions of the x-coordinate. Beam analysis is introduced in stages. A general formulation is given at the conclusion of all the stages.

3.1 Analysis for Internal Forces

A beam resists an external load by inducing internal forces. The external load can be a point load (P), a distributed load (p) (see Fig. 3-1), or an applied bending moment, as shown in Fig. 3-4. The loads (P and p) must be applied along the y-coordinate direction and are positive when directed along the positive y-axis. The moment (M^0) is positive when its line of action is along the z-axis, and it is shown by a counterclockwise arrow. The external moment (m^0) can also be distributed over a portion of the beam span. In USCS units, load can be specified in pound-force (lbf) and beam dimensions in inches. Concentrated load (P) is specified in pound-force, distributed load (p) in pound-force per inch; moment (M^0) in inch pound-force, and distributed moment (m^0) in inch pound-force per inch. In SI units, load P can be specified in kilonewton, p in kilonewton per meter, moment M^0 in kilonewton-meter, and m^0 in kilonewton-meter per meter.

The beam resists the applied load by inducing an internal bending moment (M) and a shear force (V) at a location (x), as shown in Fig. 3-5. The internal bending moment and shear force follow the t-sign convention as discussed in Chapter 1. Accordingly, both moments M^ℓ (with $n^\ell = 1$ and $f^\ell = 1$) and M^r (with $n^r = -1$ and $f^r = -1$) are positive. Likewise, both shear forces V^ℓ (with $n^\ell = 1$ and $f^\ell = 1$) and V^r (with $n^r = -1$ and $f^r = -1$) are positive. Equality of internal force is established through the transverse or shear EE and the moment EE written at location x.

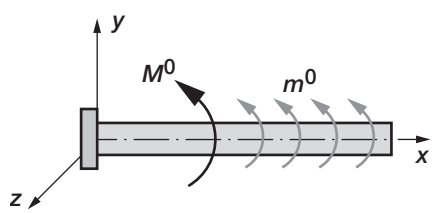

FIGURE 3-4 *Applied bending moments.*

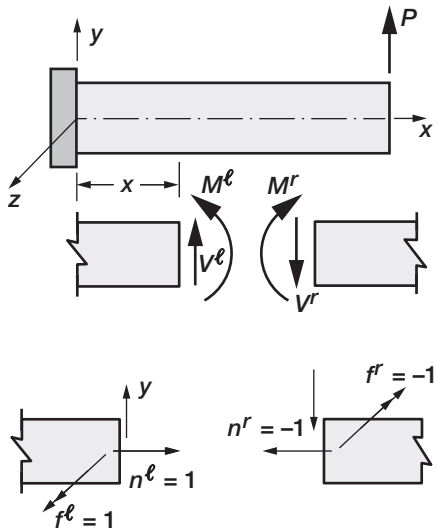

FIGURE 3-5 *Sign convention for bending moment and shear force.*

$$\sum_y F = 0: \qquad V^\ell - V^r = 0 \quad \text{or} \quad V^\ell = V^r = V \tag{3-1a}$$

$$\sum_z M = 0: \qquad M^\ell - M^r = 0 \quad \text{or} \quad M^\ell = M^r = M \tag{3-1b}$$

M and V designate the bending moment and shear force at a section, respectively. The equilibrium formulation must follow the n-sign convention.

Boundary Conditions

The free end B of the cantilevered beam shown in Fig. 3-6a has no restraints, and it is free to displace and rotate. In other words, the displacement $[v(x = \ell) \neq 0]$, and the slope $[\theta(x = \ell) \neq 0]$ are nonzero quantities. Displacement in a beam is specified along its neutral axis. Displacement along the beam length, also referred to as the elastic curve, is depicted in Fig. 3-6a. There is no reaction at the free end. The moment and shear force are zero ($M = V = 0$). This information constitutes the boundary condition at the free end and is stated as

$$M(x = \ell) = 0 \tag{3-2a}$$

$$V(x = \ell) = 0 \tag{3-2b}$$

$$v(x = \ell) \neq 0 \tag{3-2c}$$

$$\theta(x = \ell) \neq 0 \tag{3-2d}$$

The built-in end B of the beam is fully restrained. This end can neither displace nor rotate $[v(x = 0) = 0]$, and the slope $[\theta(x = 0) = 0]$ is zero. There are two reactions at the fixed end.

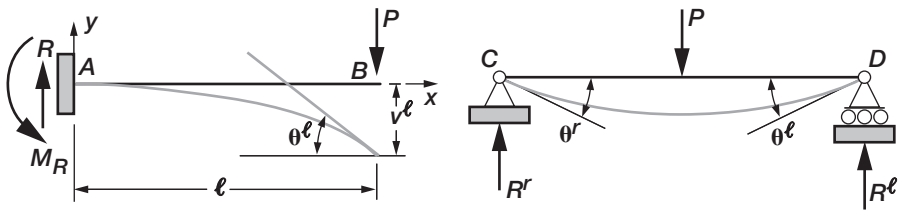

(a) Cantilevered beam. (b) Simply supported beam.

FIGURE 3-6 *Boundary conditions of beams.*

The moment and shear force are nonzero [$M(x = 0) \neq 0$ and $V(x = 0) \neq 0$]. This information constitutes the boundary condition at the fixed end A.

$$M(x = 0) \neq 0 \tag{3-3a}$$
$$V(x = 0) \neq 0 \tag{3-3b}$$
$$v(x = 0) = 0 \tag{3-3c}$$
$$\theta(x = 0) = 0 \tag{3-3d}$$

Consider next the simply supported beam shown in Fig. 3-6*b*. It is hinged to the foundation at C. This support condition suppresses displacements but allows rotation. The displacements (u, v) along the x- and y-coordinate directions are zero [$u(x = 0) = 0$ and $v(x = 0) = 0$], but the slope exists [$\theta(x = 0) \neq 0$]. There are reactions along the x- and y-coordinate directions, but the moment is zero ($M = 0$). This information constitutes the boundary condition at the simply supported end C.

$$M(x = 0) = 0 \tag{3-4a}$$
$$V(x = 0) \neq 0 \tag{3-4b}$$
$$u(x = 0) = 0 \tag{3-4c}$$
$$v(x = 0) = 0 \tag{3-4d}$$
$$\theta(x = 0) \neq 0 \tag{3-4e}$$

The end at D is supported on rollers. The hinged conditions given by Eq. (3-4) are modified to obtain the boundary conditions at the roller support. Such a support allows displacement along the x-coordinate direction ($u(x = \ell) \neq 0$).

$$M(x = \ell) = 0 \tag{3-5a}$$
$$V(x = \ell) \neq 0 \tag{3-5b}$$
$$u(x = \ell) \neq 0 \tag{3-5c}$$
$$v(x = \ell) = 0 \tag{3-5d}$$
$$\theta(x = \ell) \neq 0 \tag{3-5e}$$

For the force analysis of the determinate beam, we will use the boundary conditions imposed on the shear force and bending moment. The conditions on displacement will be utilized during the calculation of displacement. The hinge boundary condition ($u = v = 0$) ensures the stability of a beam. A boundary condition on axial displacement $u(x)$ is usually neglected in simple beam analysis because it is small.

Bending Moment and Shear Force Diagrams

Consider a beam with specified dimensions, boundary conditions, and external loads. The problem is to determine the bending moment $M(x)$ and shear force $V(x)$ at any location x along the beam span. The graphs—moment versus the x-coordinate and shear force versus the x-coordinate—are called the bending moment and shear force diagrams, respectively. The problem is to determine both diagrams. The determination of the diagrams is illustrated through several beam examples.

EXAMPLE 3-1

Determine the bending moment and shear force diagrams for the cantilever beam shown in Fig. 3-7*a*. It is ℓ units long and subjected to a load P at its free end along the negative y-coordinate direction.

Solution

The solution is obtained in two steps. First the reactions are calculated. The reactions are used next to determine the bending moment (BM) and shear force (SF) diagrams.

Step 1—Calculation of Reactions

As mentioned earlier, the three equilibrium equations yield the three reactions of a plane structure. A simple beam, however, has no load along the x-coordinate direction. The EE along this direction is satisfied trivially and not explicitly written. The two EE required to calculate the reaction are given by Eq. (3-1).

The cantilevered beam has two reactions at its fixed end A—BM (M_R) and transverse force (R)—but it has no reaction at its free end. The forces acting on the beam are shown in the free-body diagram in Fig. 3-7*b*. Since the reactions are not yet known, we assume them to be positive. The moment is along the counterclockwise direction, and the transverse force is along the y-coordinate direction.

Application of Eq. (3-1) yields the values of the reactions.

$$\sum_y F = 0: \quad R - P = 0 \quad \text{or} \quad R = P \tag{3-6a}$$

$$\sum_A M = 0: \quad M_R - P\ell = 0 \quad \text{or} \quad M_R = P\ell \tag{3-6b}$$

The assumed directions for the reactions M_R and R turn out to be correct.

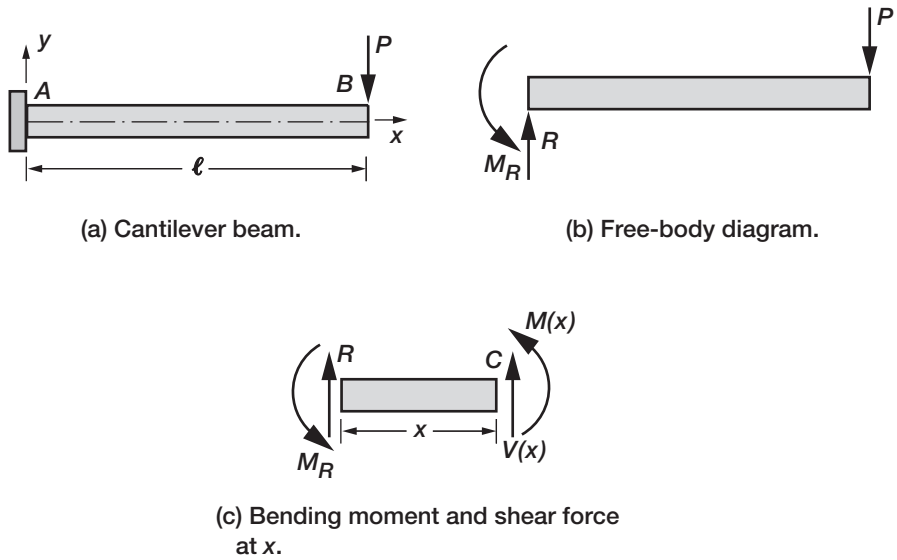

FIGURE 3-7 *Free-body diagrams to calculate bending moment and shear force.*

Step 2—Bending Moment and Shear Force Diagrams

Consider a location C at a distance x from the origin as shown in Fig. 3-7c. Mark the internal moment $M(x)$ and shear force $V(x)$ along the positive y-coordinate direction. The transverse equilibrium equation and the rotational EE at C yield:

$$\sum_y F = 0: \quad R + V(x) = 0 \tag{3-7a}$$

$$\sum_C M = 0: \quad M_R - Rx + M(x) = 0 \tag{3-7b}$$

$$V(x) = -P \tag{3-7c}$$

$$M(x) = Px - P\ell \tag{3-7d}$$

The shear force $V(x)$ is the negative of the applied load P, and it is constant throughout the span of the cantilever. The bending moment $M(x)$ is a linear function in the x-coordinate. It peaks at the origin with $M(x = 0) = -P\ell$, and it has a zero value at the free end. The graph of the shear force $V(x)$ versus the x-coordinate, or the shear force diagram, is depicted in Fig. 3-8a. Likewise, the graph of the bending moment $M(x)$ versus the x-coordinate, or the bending moment diagram, is shown in Fig. 3-8b. Both the shear force and bending moment are negative throughout the span of the beam.

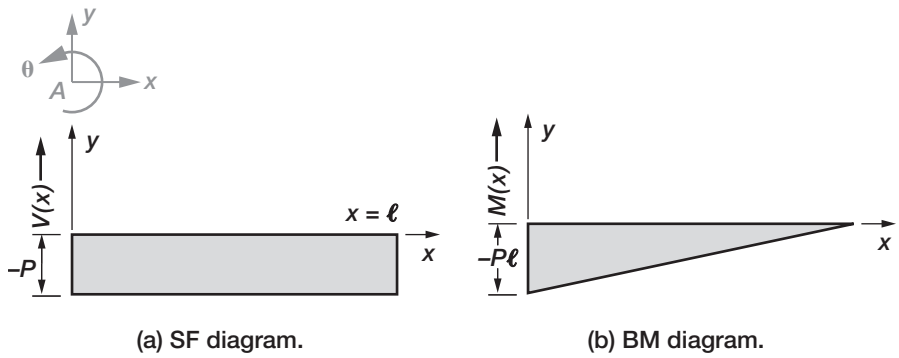

FIGURE 3-8 *SF and BM diagrams for Example 3-1.*

EXAMPLE 3-2

Determine the bending moment and shear force diagrams for the simply supported beam shown in Fig. 3-9*a*. The beam is ℓ units long and is subjected to a load P along the negative y-coordinate direction at its quarter span.

Solution

Step 1—Calculation of Reactions

The simply supported beam has two reactions (R_A and R_B), as shown in Fig. 3-9*b*. The reactions are obtained from the transverse EE and rotational EE written at A.

$$\sum_y F = 0: \quad R_A + R_B - P = 0 \tag{3-8a}$$

$$\sum_A M = 0: \quad R_B\ell - P\left(\frac{\ell}{4}\right) = 0 \tag{3-8b}$$

$$R_A = \frac{3P}{4} \tag{3-8c}$$

$$R_B = \frac{P}{4} \tag{3-8d}$$

The support A, which is nearer to the load, carries three-quarters of the load, while the far support at B has to share one-quarter of the load. Both reactions (R_A and R_B) are along the positive y-coordinate direction.

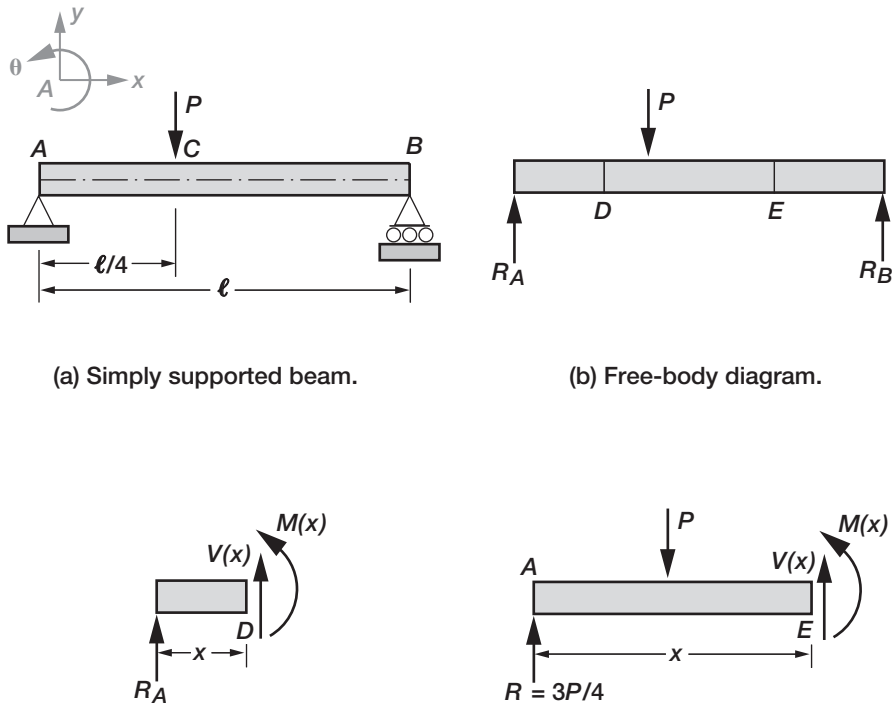

(a) Simply supported beam.

(b) Free-body diagram.

(c) BM and SF in span *AC*.

(d) BM and SF in span *CB*.

FIGURE 3-9 *SF and BM in a simply supported beam.*

Step 2—Bending Moment and Shear Force Diagrams

Consider a location D at a distance x from the origin inside the beam span AC ($0 \le x \le \ell/4$) as shown in Fig. 3-9c. Mark the internal moment $M(x)$ and shear force $V(x)$, considering them positive. The transverse equilibrium equation and the rotational EE at D yield

$$V(x) + R_A = 0$$
$$M(x) - R_A x = 0$$

or

$$\left.\begin{aligned} V(x) &= -\tfrac{3P}{4} \\ M(x) &= \tfrac{3Px}{4} \end{aligned}\right\} \left(\text{for } 0 \le x \le \frac{\ell}{4}\right) \qquad (3\text{-}8e)$$

Likewise, consider a location E at a distance x from the origin inside the beam span CB ($\ell/4 \leq x \leq \ell$), as shown in Fig. 3-9d. Mark the internal moment $M(x)$ and shear force $V(x)$, considering them positive. The transverse equilibrium equation and the rotational EE at E yield

$$V(x) - P + \frac{3P}{4} = 0$$

$$M(x) + P\left(x - \frac{\ell}{4}\right) - \frac{3}{4}Px = 0$$

or

$$\left.\begin{aligned} V(x) &= \tfrac{P}{4} \\ M(x) &= \tfrac{P\ell}{4} - \tfrac{Px}{4} \end{aligned}\right\}\left(\text{for } \frac{\ell}{4} \leq x \leq \ell\right) \tag{3-8f}$$

The shear force $V(x)$ is graphed in the span AC ($0 \leq x \leq /4$) using Eq. (3-8e) and in the span CB ($\ell/4 \leq x \leq \ell$) from Eq. (3-8f), as shown in Fig. 3-10a. The bending moment $M(x)$ is graphed in the span AC ($0 \leq x \leq \ell/4$) using Eq. (3-8e) and in the span CB ($\ell/4 \leq x \leq \ell$) from Eq. (3-8f), as shown in Fig. 3-10b. The SF diagram exhibits a discontinuity at C that is the point of application of the load P. The shear force at the left ($V^{\ell} = -3P/4$) and right ($V^{r} = P/4$) of location C differ by the load value P. The application of load P created a discontinuity in the shear force diagram. The shear force $V(x)$ is negative in the span AC $\{0 \leq x \leq \ell/4\}$, but it is positive in the span CB ($\ell/4 \leq x \leq \ell$). The bending moment at C is continuous with a positive slope in the left and a negative slope in the right of the load application point C. The bending moment is positive in the entire length of the beam.

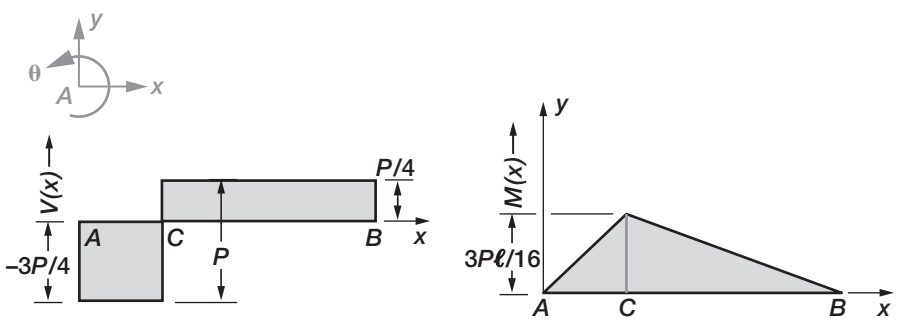

(a) SF diagram. (b) BM diagram.

FIGURE 3-10 *SF and BM diagrams for Example 3-2.*

EXAMPLE 3-3

Determine the bending moment and shear force diagrams for the simply supported beam shown in Fig. 3-11. It is ℓ units long and is subjected to a moment M^0 at its midspan.

Solution

Step 1—Calculation of Reactions

The two reactions (R_A and R_B) of the beam are obtained from the transverse EE and rotational EE written at A.

$$R_A + R_B = 0 \tag{3-9a}$$

$$R_B\ell + M^0 = 0 \tag{3-9b}$$

$$R_A = \frac{M^0}{\ell} \tag{3-9c}$$

$$R_B = -\frac{M^0}{\ell} \tag{3-9d}$$

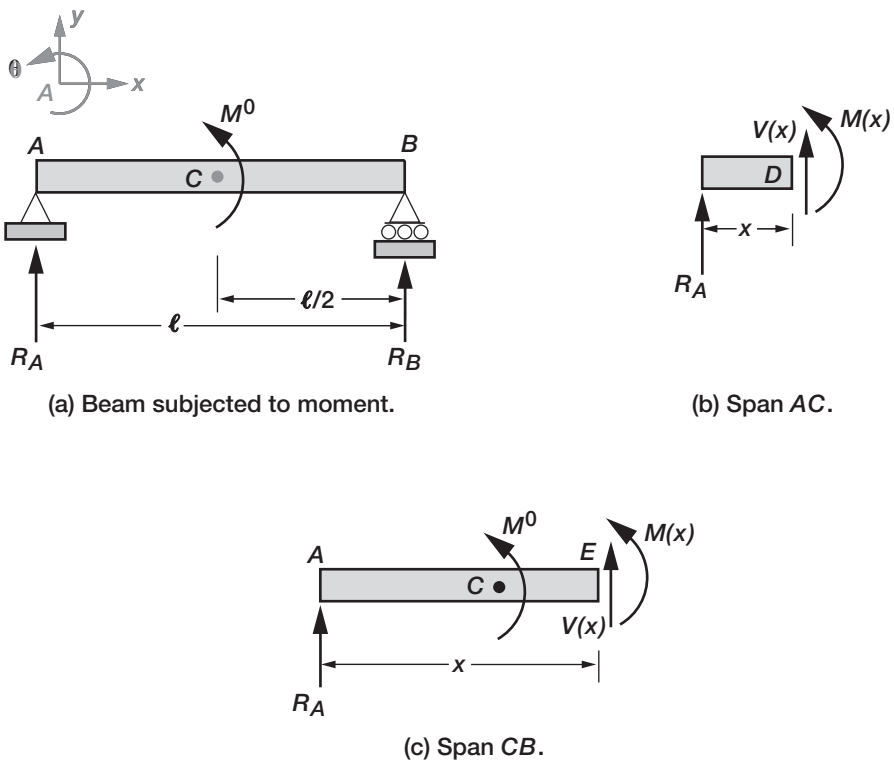

(a) Beam subjected to moment.

(b) Span AC.

(c) Span CB.

FIGURE 3-11 *Bending moment and shear force for concentrated moment.*

The reaction R_A is positive at support A. It is negative (R_B) at support B.

Step 2—Bending Moment and Shear Force Diagrams

Consider a location D at a distance x from the origin inside the portion of the beam span AC ($0 \le x \le \ell/2$), as shown in Fig. 3-11b. Mark the internal moment $M(x)$ and shear force $V(x)$, considering them positive. The transverse equilibrium equation and the rotational EE at D yield

$$V(x) = -R_A = -\frac{M^0}{\ell} \tag{3-9e}$$

$$M(x) = R_A x = M^0 \frac{x}{\ell} \tag{3-9f}$$

Likewise, the BM and SF are obtained for the span CB $\{\ell/2 \le x \le \ell\}$ using Fig. 3-11c.

$$V(x) = -R_A = -\frac{M^0}{\ell} \tag{3-9g}$$

$$M(x) + M^0 - R_A x = 0$$

$$M(x) = \frac{M^0}{\ell}(x - \ell) \tag{3-9h}$$

The shear force diagram is constructed for the entire span, because there is no transverse load, and it is depicted in Fig. 3-12a. The shear force V is uniform across the span and satisfies Eqs. (3-9e) and (3-9g). The bending moment diagram is constructed for span AC ($0 \le x \le \ell/2$) using Eq. (3-9f) and for span CB ($\ell/2 \le x \le \ell$) from Eq. (3-9h), as shown in Fig. 3-12b. The BM diagram, as expected, shows an abrupt discontinuity of magnitude M^0 at C, which is the point of application of the moment.

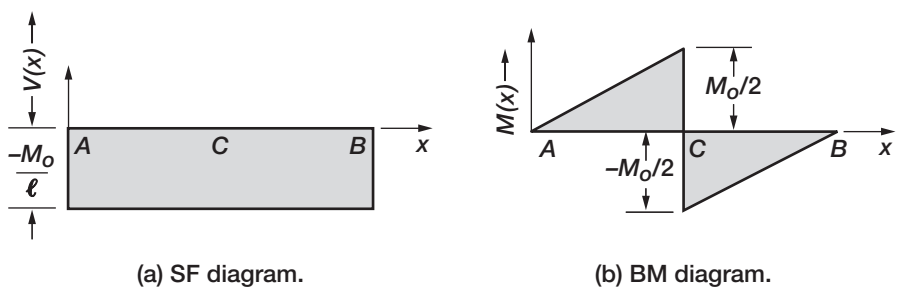

FIGURE 3-12 *SF and BM diagrams for Example 3-3.*

EXAMPLE 3-4

Determine the bending moment and shear force diagrams for the simply supported beam shown in Fig. 3-13*a*. It is ℓ units long and is subjected to a distributed load p per unit length.

Solution

Step 1—Calculation of Reactions

For the calculation of the reactions, the distributed load in the entire span can be lumped by an equivalent load ($P = p\ell$) acting at the center of the span, as shown in Fig. 3-13*b*. The two reactions (R_A and R_B) of the beam are obtained from two rotational EE written at A and B, respectively. This procedure is equivalent to the earlier method of writing one transverse EE and one rotational EE.

$$R_B\ell - (p\ell)\left(\frac{\ell}{2}\right) = 0$$

$$-R_A\ell + (p\ell)\left(\frac{\ell}{2}\right) = 0$$

$$R_A = R_B = \frac{p\ell}{2} \tag{3-10a}$$

Step 2—Bending Moment and Shear Force Diagrams

Consider a location D at a distance x from the origin as shown in Fig. 3-13*c*. Mark the internal moment $M(x)$ and shear force $V(x)$, considering them positive. Also lump the distributed load $p_x = px$ at the location $x/2$ from the origin. The transverse equilibrium equation and the rotational EE at D yield

$$V(x) - px + \frac{p\ell}{2} = 0$$

$$V(x) = p\left(x - \frac{\ell}{2}\right) \tag{3-10b}$$

$$M(x) + px\left(\frac{x}{2}\right) - \frac{p\ell}{2}x = 0$$

$$M(x) = \frac{px}{2}(\ell - x) \tag{3-10c}$$

The shear force diagram is constructed from Eq. (3-10*b*). It is linear with a negative value at $A(V(x = 0) = -p\ell/2)$, and it is positive at $B(V(x = \ell) = p\ell/2)$, as shown in Fig. 3-14*a*. The bending moment diagram is constructed from Eq. (3-10*c*). It is positive throughout the span, as shown in Fig. 3-14*b*. It has a parabolic shape with a maximum value $\{M_{\max} = M(x = \ell/2) = p\ell^2/8\}$ at the midspan ($x = \ell/2$).

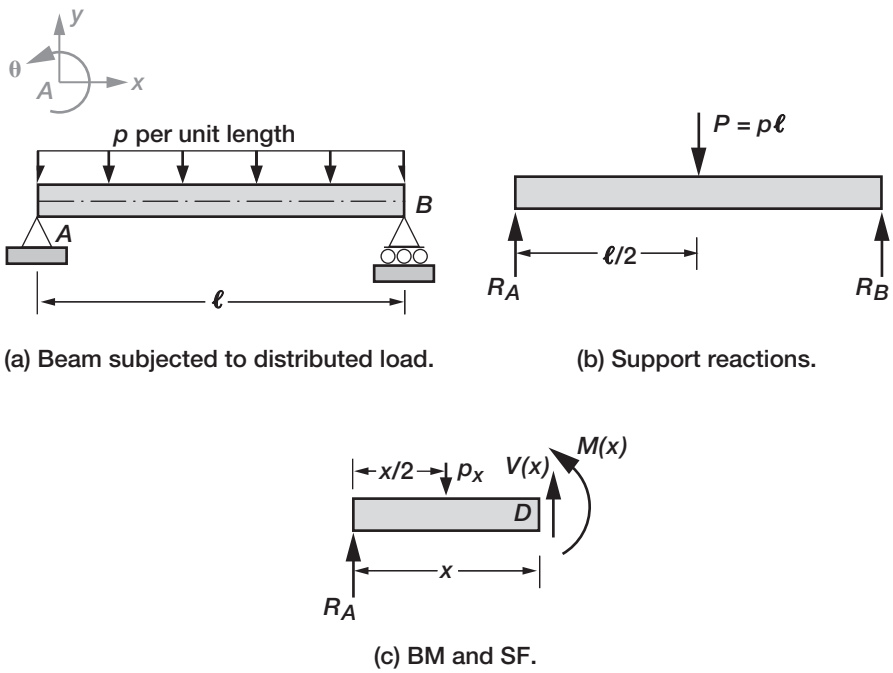

(a) Beam subjected to distributed load.

(b) Support reactions.

(c) BM and SF.

FIGURE 3-13 *BM and SF diagrams for Example 3-4.*

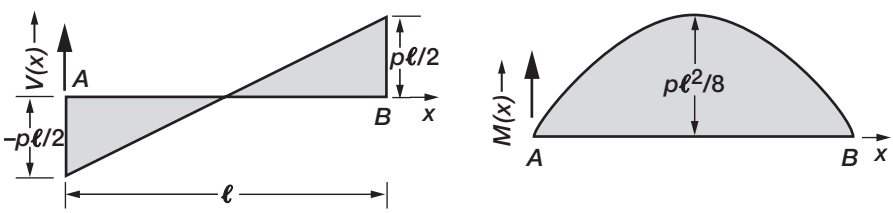

(a) SF diagram.

(b) BM diagram.

FIGURE 3-14 *SF and BM diagrams for Example 3-4.*

EXAMPLE 3-5

Determine the bending moment and shear force diagrams for a simply supported beam with an overhang as shown in Fig. 3-15*a*. The beam is 180 in. long with a 60-in. overhang. It is subjected to a distributed load of 100 lbf/in. along the center 100 in. of its span. The overhang carries a load of 1 kip long the negative *y*-coordinate direction.

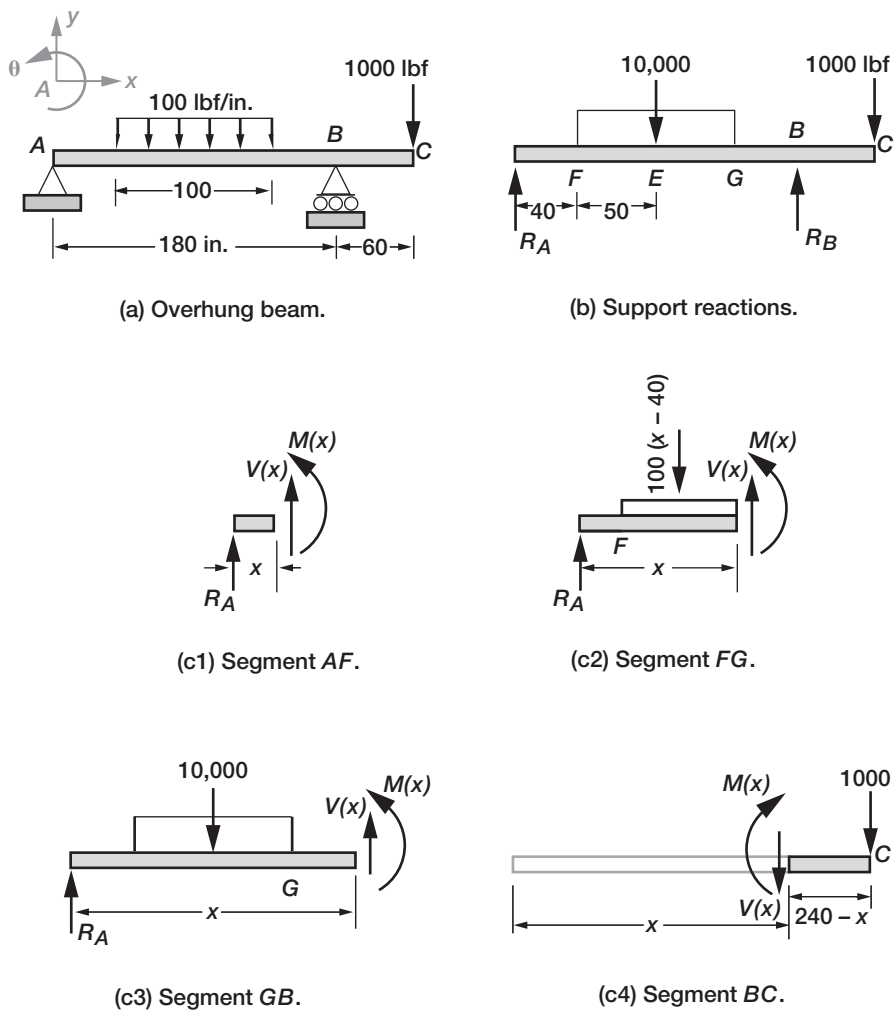

FIGURE 3-15 *BM and SF diagrams for Example 3-5.*

Solution

Step 1—Calculation of Reactions

The two reactions (R_A and R_B) of the beam are obtained from a transverse EE and a rotational EE written at E, which is the midpoint of the distributed load p.

$$\sum_y F: \quad R_A + R_B - 11{,}000 = 0$$

$$\sum_E M: \quad -90R_A + 90R_B - 1000 \times 150 = 0$$

$$R_A = 4667\,\text{lbf} = 4.667\,\text{kip} \tag{3-11a}$$

$$R_B = 6333\,\text{lbf} = 6.333\,\text{kip} \tag{3-11b}$$

The accuracy of the reaction can be checked by writing the moment EE at any convenient location. Select locations at A and C because the moment is zero at these points ($M_A = M_C = 0$).

$$M_A = -1 \times 240 + 6.333 \times 180 - 10 \times 90 = 0 \tag{3-11c}$$

$$M_C = -4.667 \times 240 + 10 \times 150 - 6.333 \times 60 = 0 \tag{3-11d}$$

Step 2—Bending Moment and Shear Force Diagrams

Because of the nature of load distribution, the BM and SF diagrams have to be constructed separately for four segments: AF, FG, GB, and BC, as shown in Fig. 3-15(c_1) to (c_4). The BM and SF for each segment follow.

Segment AF ($0 \le x \le 40$):

$$V(x) = -R_A = -4667 \tag{3-11e}$$

$$M(x) = 4667x \tag{3-11f}$$

Segment FG:

$$\begin{aligned} V(x) &= -4667 + 100(x - 40) \\ &= 100x - 8667 \end{aligned} \tag{3-11g}$$

$$M(x) = 4667x - \frac{100}{2}(x - 40)^2 = 4667x - 50(x - 40)^2 \tag{3-11h}$$

Segment GB:

$$V(x) = -4667 + 10{,}000 = 5333 \tag{3-11i}$$

$$\begin{aligned} M(x) &= 4667x - 10{,}000(x - 90) \\ &= 900{,}000 - 5333x \end{aligned} \tag{3-11j}$$

Segment BC: For simplicity, the calculation for this section uses the loads in the overhang. $M(x)$ and $V(x)$ are positive as marked in Fig. 3-15(c_4).

$$V(x) = -1000 \tag{3-11k}$$

$$M(x) = -1000(240 - x) \tag{3-11l}$$

The SF and BM are verified for few locations in the beam:

Location F: The SF and BM calculated at F ($x = 40$) from segments AF and FG must be in agreement.

Segment AF:

$$V_F = -4667$$

$$M_F = 4667 \times 40 = 186{,}680$$

Segment FG:

$$V_F = V(x = 40) = 100 \times 40 - 8667 = -4667 \tag{3-12a}$$

$$M_F = M(x = 40) = 4667\,x = 186{,}680 \tag{3-12b}$$

Location G: The SF and BM calculated from segments FG and GB are in agreement.

$$V_G = V(x = 140) = 5333 \tag{3-12c}$$

$$M_G = M(x = 140) = 15{,}338 \tag{3-12d}$$

Location B: The SF and BM calculated from segments GB and BC are in agreement.

$$V_B = V(x = 180) = -1000 \tag{3-12e}$$

$$M_B = M(x = 180) = -60{,}000 \tag{3-12f}$$

The SF and BM for the overhang BC are calculated from support point C. Such a calculation is legitimate as long as the moment $M(x)$ and shear force $V(x)$ are considered to be positive and are appropriately marked. The BM at B is marked with a clockwise arrow because the normal to the section is negative ($n = -1$). For the same reason, the shear force is directed along the negative y-coordinate direction. The x-coordinate is measured from the origin at A.

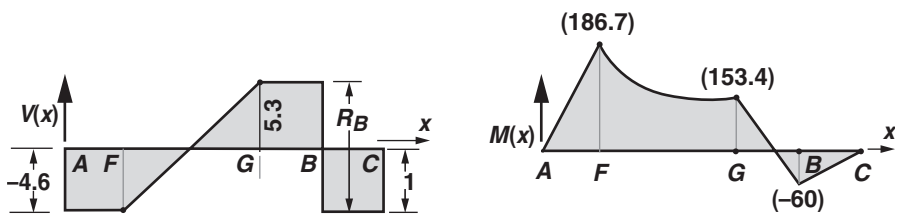

(a) SF diagram in kip. **(b) BM diagram in in.-k.**

FIGURE 3-16 *SF and BM diagrams for Example 3-5.*

The SF diagram is constructed for the four segments using the relevant equations: for segment AF, Eq. (3-11e); for segment FG, Eq. (3-11g); for segment GB, Eq. (3-11i); and for segment BC, Eq. (3-11k). In segment AF, the shear force has a constant value of -4.667 kip because there is no distributed load. In the segment FG, the SF variation is linear because of the distributed load. The SF is constant in segments GB and BG. An abrupt variation occurs at B because of reaction R_B. The BM diagram is also constructed for the four segments using the relevant equations: for segment AF, Eq. (3-11f); for segment FG, Eq. (3-11h); for segment GB, Eq. (3-11j); and for segment BC, Eq. (3-11l). The BM diagram has a linear variation in segment AF because there is no distributed load. In the segment FG, the BM variation is quadratic because of distributed load. The BM is linear in segments GB and BG. It attains a maximum value of $M_{\max}(x = 40\,\text{in.}) = 186.68$ in.-k at F.

EXAMPLE 3-6

Determine the bending moment and shear force diagrams for a simply supported beam with two overhangs as shown in Fig. 3-17a. It is 100 in. long with 50-in. overhangs. It is subjected to symmetrical load as shown in the figure.

Solution

Step 1—Calculation of Reactions

The two reactions (R_A and R_B) are calculated from the moment EE written at A and B, respectively.

$$\sum_A M: \quad R_B \times 100 - 1 \times 150 - 5 \times 75 - 5 \times 25 + 1 \times 50 = 0$$

$$R_B = 6\,\text{kip} \tag{3-13a}$$

$$\sum_B M: \quad -R_A \times 100 + 1 \times 150 + 5 \times 75 + 5 \times 25 - 1 \times 50 = 0$$

$$R_A = 6\,\text{kip} \tag{3-13b}$$

It is easily verified that the reactions satisfy the transverse equilibrium equation.

$$\sum_Y F: \quad R_A + R_B - (1 + 5 + 5 + 1) = 0 \tag{3-13c}$$

The reactions are equal ($R_A = R_B$) because of symmetry. Each reaction is equal to half the applied load.

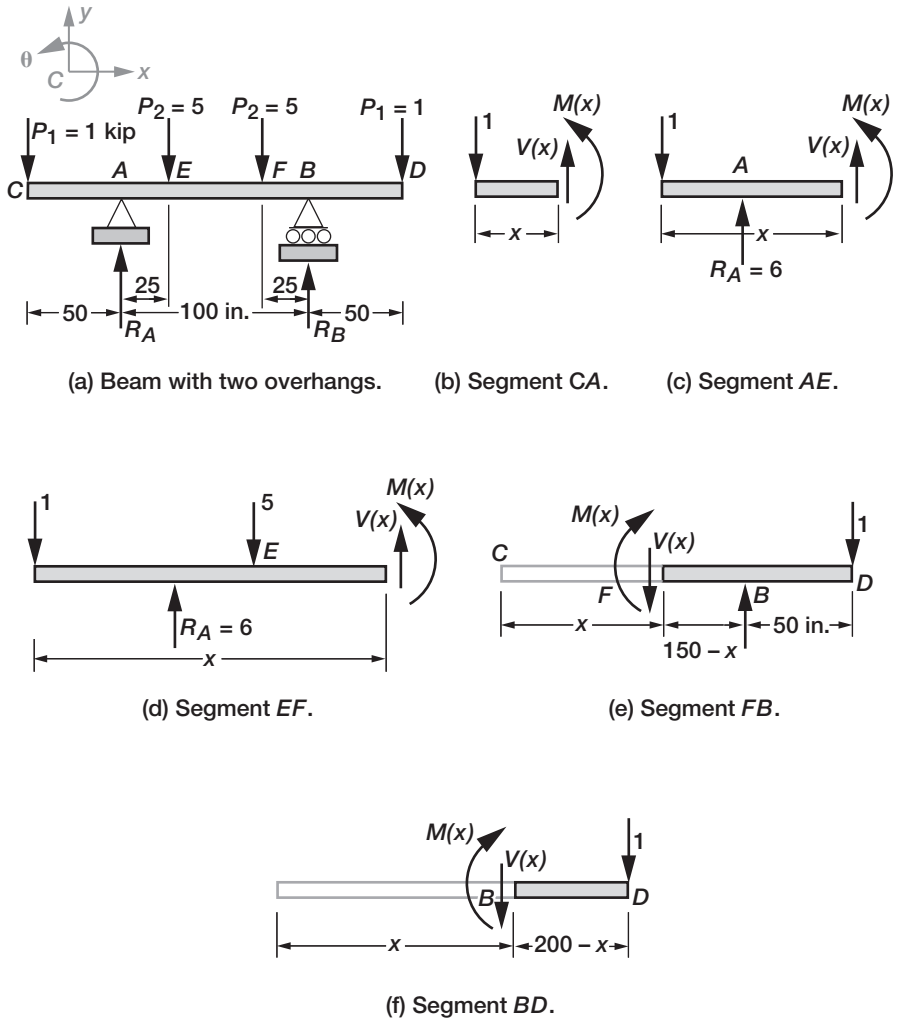

FIGURE 3-17 *Analysis of beam with overhangs.*

Step 2—Bending Moment and Shear Force Diagrams

Because of the nature of load distribution, the BM and SF diagrams have to be constructed separately for five segments: *CA*, *AE*, *EF*, *FB*, and *BD*. The BM and SF for the segments are illustrated in Figs. 3-17*b* to 3-17*f*.

Segment CA ($0 \leq x \leq 50$):

$$V(x) = 1 \tag{3-13d}$$

$$M(x) = -x \tag{3-13e}$$

Segment AE ($50 \le x \le 75$):

$$V(x) = -5 \tag{3-13f}$$

$$M(x) = 5x - 300 \tag{3-13g}$$

Segment EF ($75 \le x \le 125$):

$$V(x) = 0 \tag{3-13h}$$

$$M(x) = 75 \tag{3-13i}$$

Segment FB ($125 \le x \le 150$):

$$V(x) = 5 \tag{3-13j}$$

$$M(x) = -5x + 700 \tag{3-13k}$$

Segment BD ($150 \le x \le 200$):

$$V(x) = 1 \tag{3-13l}$$

$$M(x) = 200 - x \tag{3-13m}$$

We construct the SF diagram for the five segments by using the relevant equations: for segment *CA*, Eq. (3-13*d*); for segment *AE*, Eq. (3-13*f*); for segment *EF*, Eq. (3-13*h*); for segment *FB*, Eq. (3-13*j*); and for segment *BD*, Eq. (3-13*l*). The shear force diagram is asymmetrical with the beam center *G*. The shear force is constant ($V = 1$) in the overhangs, and it is zero in the central segment *EF*. In segments *AE* and *FB*, shear force is uniform but negative ($V = -5$ kip) and positive ($V = 5$ kip), respectively. The *BM* diagram is also constructed for the five segments using the relevant equations: for segment *CA*, Eq. (3-13*e*); for segment *AE*, Eq. (3-13*g*); for segment *EF*, Eq. (3-13*i*); for segment *FB*, Eq. (3-13*k*); and for segment *BD*, Eq. (3-13*m*). The bending moment diagram is symmetrical about the beam center *G*. The BM has a linear variation in the overhangs, and it is negative. It is constant at $M = 75$ in.-k in the center segment *EF*. In segments *AE* and *FB*, the bending moment is linear, but it changes sign, as shown in Fig. 3-18*b*.

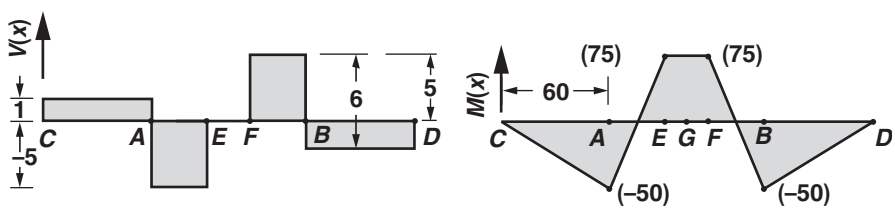

(a) SF diagram in kip. **(b) BM diagram in in.-k.**

FIGURE 3-18 *SF and BM diagrams for Example 3-6.*

3.2 Relationships between Bending Moment, Shear Force, and Load

The bending moment, shear force, and transverse load in a beam are related. These relationships can be used to verify the accuracy of the bending moment and shear force diagrams. The relationships between the three variables are obtained from the transverse EE and rotational EE of an elemental block of length Δx, as shown in Fig. 3-19. The forces acting on the block are marked as follows.

1. Distributed transverse load p is considered positive when directed along the positive y-coordinate axis.
2. Internal bending moment is M in the left face and it is $(M + \Delta M)$ on the right face. Both moments are positive according to the t-sign convention. The moment increases by ΔM between the two faces.
3. Internal shear force is V in the left face and it is $(V + \Delta V)$ on the right face. Both forces are positive according to the t-sign convention. The shear force increases by ΔV between the two faces.

The block is in equilibrium under the action of the forces. The equilibrium equation along the y-coordinate direction yields

$$\sum_y F = 0: \quad (V + \Delta V) + p\Delta x - V = 0$$

Dividing by Δx and taking the limit as Δx tends to zero

$$\underset{\Delta x \to 0}{\mathcal{L}t} \left\{ \frac{\Delta V}{\Delta x} \right\} = -p$$

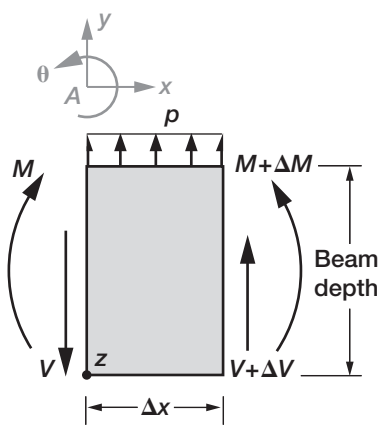

FIGURE 3-19 *Forces in an elemental beam block.*

$$\frac{dV}{dx} = -p \tag{3-14a}$$

The rate of change of shear force with respect to distance x along the beam axis is equal to the negative of the distributed transverse load p.

The moment equilibrium equation at a point z, as marked in Fig. 3-19, yields

$$\sum_z M \quad (V + \Delta V)\Delta x + (M + \Delta M) - (M) + p\Delta x \cdot \left(\frac{\Delta x}{2}\right) = 0$$

$$\underset{\Delta x \to 0}{\mathcal{L}t} \left\{ V + \frac{\Delta M}{\Delta x} + p\frac{\Delta x}{2} \right\} = 0$$

$$\frac{dM}{dx} = -V \tag{3-14b}$$

$$V(x) = -\int p dx + C_1 \tag{3-14c}$$

$$M(x) = -\int V dx + C_2 \tag{3-14d}$$

Second-order terms are neglected. The term (ΔV) is neglected because it is small compared to V. In the limit $(p\Delta x)$ becomes small and is neglected. The rate of change of the bending moment with respect to distance x along the beam axis is equal to the negative of the shear force V. The relationships can be integrated to obtain two more formulas given by Eqs. (3-14c) and (3-14d). The constants of integration (C_1 and C_2) have to be determined from the boundary conditions of the problem. For the calculation of constant C_1 in Eq. (3-14c), a known value of shear force $V = V^a$ at a location $(x = a)$ has to be used. Likewise, for the calculation of constant C_2 in Eq. (3-14d), a known value of bending moment $M = M^a$ at location $(x = a)$ can be used.

EXAMPLE 3-7

Verify the SF diagram from the BM diagram in Example 3-6.

Solution

As observed earlier, the SF and BM diagrams have five segments. Verification has to be performed individually.

Segment CA ($0 \le x \le 50$):

$$M(x) = -x \tag{3-13e}$$

$$V(x) = -\frac{dM(x)}{dx} = 1$$

Segment AE ($50 \le x \le 75$):

$$M(x) = 5x - 300 \tag{3-13g}$$
$$V(x) = -\frac{dM(x)}{dx} = -5$$

Segment EF ($75 \le x \le 125$):

$$M(x) = 75 \tag{3-13i}$$
$$V(x) = -\frac{dM(x)}{dx} = 0$$

Segment FB ($125 \le x \le 150$):

$$M(x) = -5x + 700 \tag{3-13k}$$
$$V(x) = -\frac{dM(x)}{dx} = 5$$

Segment BD:

$$M(x) = 200 - x \tag{3-13m}$$
$$V(x) = -\frac{dM(x)}{dx} = 1$$

The shear force that is back-calculated from the moment is verified successfully for each segment.

EXAMPLE 3-8

Verify the bending moment diagram from the shear force diagram in Example 3-6.

Solution

The bending moment diagram has to be verified separately for each segment.

Segment CA ($0 \le x \le 50$):

$$V(x) = 1$$
$$M(x) = -\int V(x)dx + C_1 = -x + C_1$$

To calculate the constant of integration C_1, one must know and use the value of $M(x)$ at any location in the segment CA ($0 \le x \le 50$). BM is zero at C; that is, at $x = 0$, $M(0) = 0$, or $C_1 = 0$.

$$M(x) = -x$$

Segment AE ($50 \leq x \leq 75$):

$$V(x) = -5$$
$$M(x) = \int 5dx + C_1$$
$$M(x) = 5x + C_1$$

The constant C_1 is determined from the condition at $x = 50$; $M(50) = -50$ as calculated from segment CA because this segment also includes the point $x = 50$.

$$-50 = 5 \times 50 + C_1$$
$$C_1 = -300$$
$$M(x) = 5x - 300$$

Segment EF ($75 \leq x \leq 125$):

$$V(x) = 0$$
$$M(x) = C_1$$

At $x = 75$, $M(x) = 75 = C_1$

$$M(x) = 75$$

Segment FB ($125 \leq x \leq 150$):

$$V(x) = 5$$
$$M(x) = -5x + C_1$$

At $x = 125$, $M(x) = 75 = -5 \times 125 + C_1$

$$C_1 = 700$$
$$M(x) = -5x + 700$$

Segment BD ($150 \leq x \leq 200$):

$$V(x) = 1$$
$$M(x) = -x + C_1$$

At $x = 200$, $M(x) = 0 = -200 + C_1$

$$C_1 = 200$$
$$M(x) = 200 - x$$

3.3 Flexure Formula

Stress is induced in a beam because of the internal bending moment and the shear force. Bending moment induces normal stress, whereas shear force induces shear stress. The relationship between the normal stress σ and the bending moment M is referred to as the flexure formula. This important formula is developed in this section. The shear stress formula is developed in Section 3.4. The flexure formula to be derived is illustrated in Fig. 3-20, and it has the following form.

$$\frac{-\sigma}{y} = \frac{M}{I} \tag{3-15}$$

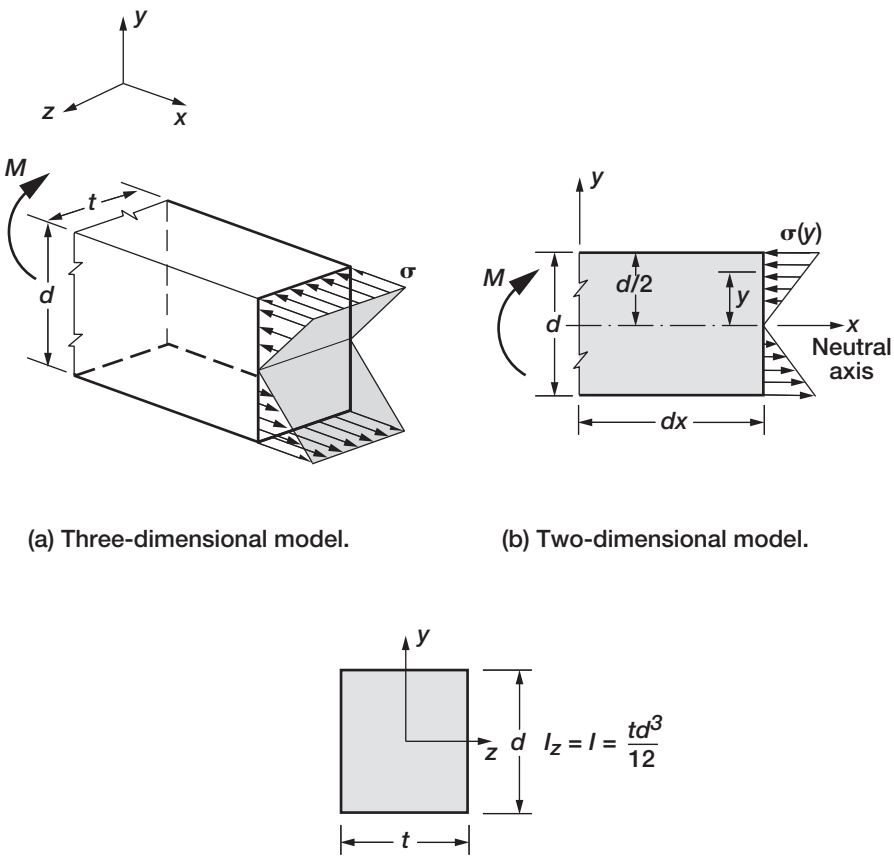

(a) Three-dimensional model.

(b) Two-dimensional model.

(c) Moment of inertia.

FIGURE 3-20 *Distribution of bending stress in a beam.*

Here σ is the stress at a distance y from the neutral axis. M is the bending moment, and I is the moment of inertia of the beam cross-section. For a beam with a rectangular cross-section, the stress σ is uniform across its thickness as shown in Fig. 3-20*a*. The uniform distribution across the thickness allows the use of a two-dimensional illustration without any consequence, as shown in Fig. 3-20*b*. The top fiber of the beam at depth $y = d/2$ is in compression, whereas the bottom fiber at depth $y = -d/2$ is in tension. The stress in a beam changes sign along its depth, and it is zero at $y = 0$. The fibers with no stress lie in the x–z plane at $y = 0$, and this is referred to as the neutral plane. In the two-dimensional representation, this plane degenerates to the neutral axis. The parameter I in the flexure formula is the moment of inertia of the beam cross-section about the neutral axis. For a symmetrical, rectangular cross-section, the moment of inertia about the z-coordinate axis, as shown in Fig. 3-20*c*, is

$$I = I_z = \frac{1}{12} t d^3 \tag{3-16}$$

The moment of inertia property of a beam cross-section is further discussed in Appendix 2. The development of the flexure formula took nearly two centuries. It is credited to Coulomb (1736–1806) and to Navier (1785–1836). This formula correctly predicts the absolute maximum stress at $|\sigma_{\max}| = 6|M/td^2|$ at the beam top or bottom fiber at ($y = \pm d/2$). An earlier version of the formula by Galileo (1564–1642) predicted stress at $|\sigma_{\max}|^{\text{Galileo}} = 2|M/td^2|$, which is one-third the correct value. Another formula by Bernoulli (1654–1705) produced half the correct value for stress at $|\sigma_{\max}|^{\text{Bernoulli}} = |3M/td^2|$. The error is attributed to the positioning of the neutral axis. The derivation of the flexure formula is based on assumptions that pertain to the material property, the pure flexure condition, and the kinematics of deformation. Each assumption is discussed.

Material Property

The material of the beam is assumed to be linearly elastic. The stress and strain are assumed to lie inside the linear elastic domain (see the diagram in Fig. 1-28). Poisson's effect of sympathetic deformation is neglected because the Poisson's ratio ($\nu = 0$) is set to zero, and the elastic modulus E is considered to be a constant. In beam bending, the Poisson's ratio produces an anticlastic curvature, as sketched in Fig. 3-21*a*. The beam curvature (which is in the x–y plane because the moment M is applied in that plane) is referred to as the normal or longitudinal curvature κ. Its reciprocal is the radius of curvature ($\rho = 1/\kappa$). Poisson's ratio induces the transverse anticlastic curvature κ_ν in the y–z plane. It is the product of the Poisson's ratio and the curvature ($\kappa_\nu = \nu\kappa$). The associated radius of curvature ($\rho_\nu = 1/\kappa_\nu = \rho/\nu$) is larger than the radius of curvature because Poisson's ratio is less than unity. The reader can bend a rectangular rubber eraser to observe both curvatures. In our analysis, Poisson's effect is neglected to obtain the deformation pattern in the x–y plane, as shown in Fig. 3-21*b*. The beam deforms into a cylindrical shape with radius ρ at the neutral axis.

Pure Flexure Condition

Under this assumption, the beam is in a state of pure bending without the presence of the shear force or axial force. A pure flexure test case is easily setup as shown in Fig. 3-22*a*. The center half span of the beam of length ℓ is subjected to a constant bending moment

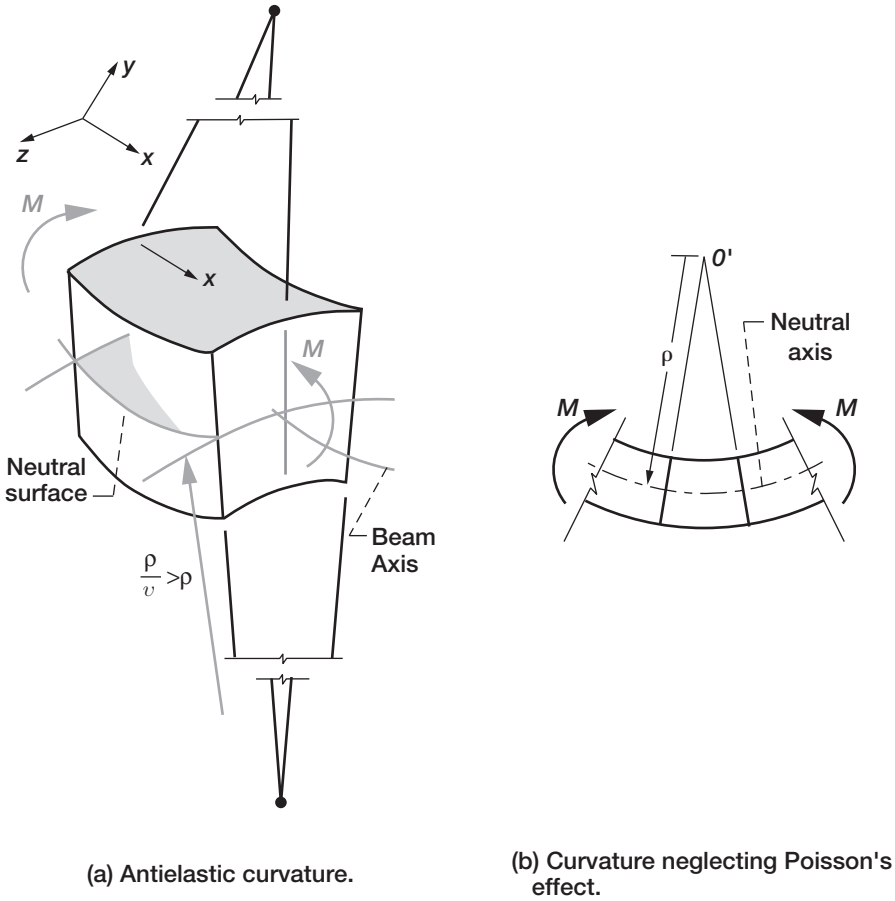

FIGURE 3-21 *Curvature in a beam.*

($M = P\ell/4$) when two equal loads (P) are applied at the $\ell/4$ and $3\ell/4$ span locations. The beam has no axial force. However, in a typical beam location both bending moment and shear force occur together. For example, at the one-eighth span location the moment $M = P\ell/8$ and the shear force $V = -P$ (see Fig. 3-22*c*). The beam theory assumes a pure flexure condition.

Kinematics Assumption

It is assumed that a beam segment is initially straight, as shown in Fig. 3-23*a*. For the purpose of simplification, let us assume a rectangular cross-section for the beam with the neutral axis at mid depth. This assumption is not mandatory but imposes little limitation to the theory. The deformed pattern of the beam under pure moment is sketched in Fig. 3-23*b*. It is assumed that an initially straight fiber (ad) across the beam depth d remains straight ($a'd'$) even after deformation. The fiber (ad) rotates to the deformed position ($a'd'$). The perpendicularity between ad and ef is maintained after deformation ($a'd'$ and $e'f'$). The fiber (ef) does

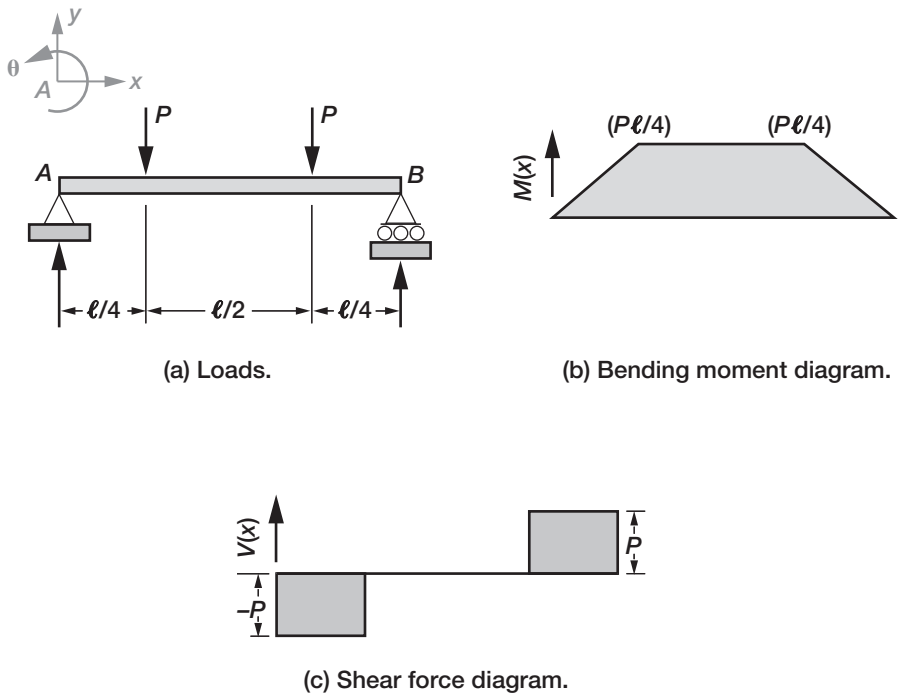

(a) Loads.

(b) Bending moment diagram.

(c) Shear force diagram.

FIGURE 3-22 *Pure flexure in a beam.*

not deform, and it is identical to the fiber ($e'f'$). This fiber (ef or $e'f'$) is referred to as the neutral axis. A parallel fiber at a distance $y = d/4$ above the neutral axis contracts, say by amount $-\Delta\ell$. A similarly positioned fiber below the neutral axis at a distance $y = -d/4$ expands by the same amount $\Delta\ell$. The deformed shape, including the depth dimension of the beam, is shown in Fig. 3-23c. The undeformed cross-sectional plane (s_1–s_2–s_3–s_4) with the normal n; deforms into another plane (s'_1–s'_2–s'_3–s'_4) with the normal n'. Both ($s_1 - s_2 - s_3 - s_4$) and (s'_1–s'_2–s'_3–s'_4) are planes. The rotation of the normals is equal to the rotation of the planes. The line (g_1–g_2) and the associated plane (g_1–g_2–g_3–g_4) do not deform. This plane, which is free from deformation, is called the neutral plane.

A block a–b–c–d, shown separately in an enlarged scale in Fig. 3-23d, has the following characteristics: $ab = ef = cd =$ undeformed length; $aa' = bb' = dd' = cc' =$ deformation. Maximum strain ε_{max} occurs at the fiber dc located at $y = d/2$ from the neutral axis.

$$\varepsilon_{max} = \frac{2c'c}{ef} \tag{3-17a}$$

Application of the rule of proportionality to the triangles fcc' and ftt' yields the value of strain $\varepsilon(y)$ at a distance y from the neutral axis.

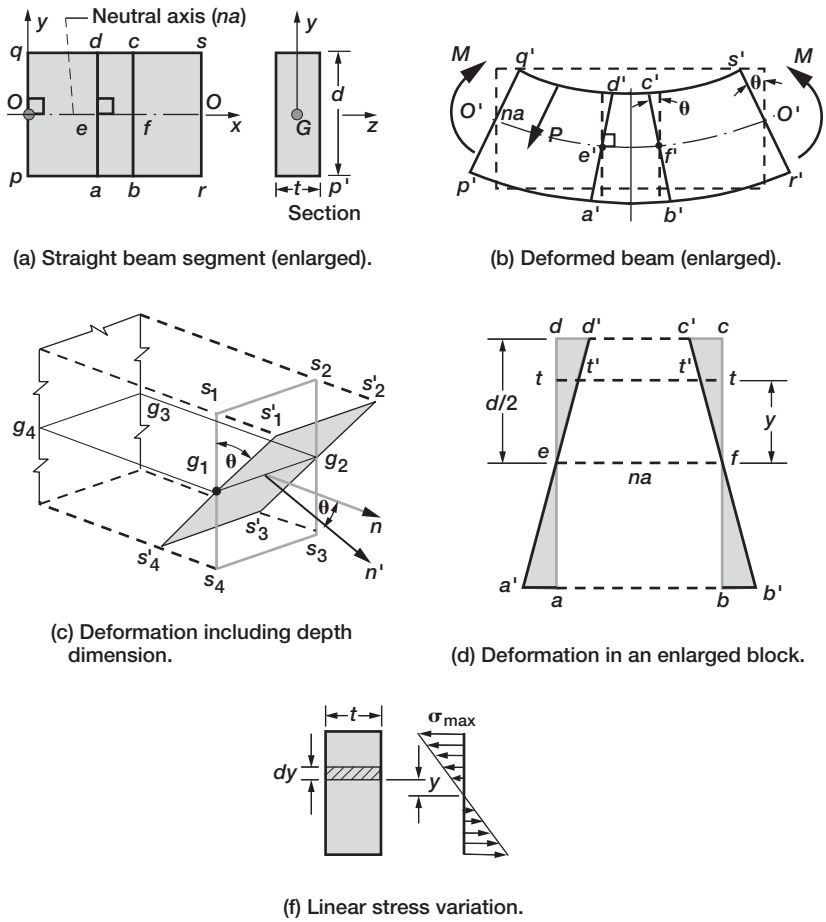

FIGURE 3-23 *Flexure formula.*

$$\frac{tt'}{cc'} = \frac{y}{(d/2)}$$

$$tt' = \frac{cc'y}{(d/2)}$$

$$\varepsilon(y) = -\frac{2tt'}{ef} = -\frac{2cc'y}{ef(d/2)}$$

$$\varepsilon(y) = \frac{-\varepsilon_{\max} y}{(d/2)} \tag{3-17b}$$

The strain $\varepsilon(y)$ is compressive when y is positive. In other words a positive moment induces compressive stress and strain in the upper fibers with positive y coordinate.

Hooke's law yields

$$\sigma(y) = E\varepsilon(y) = \frac{-\sigma_{\max} y}{(d/2)} \tag{3-17c}$$

where, $\sigma_{\max} = E\varepsilon_{\max}$.

Consider an elemental area ($dA = tdy$) at a location y from the neutral axis, as shown in Fig. 3-23*f*. The elemental force (dF), which is the product of the stress σ times the elemental area ($dA = tdy$), can be written as:

$$dF = \sigma(y)dA$$

The internal force F is obtained by integration as

$$F = \int dF = \int \sigma(y)dA = -\frac{\sigma_{\max}}{(d/2)} \int_{-d/2}^{d/2} ytdy = \frac{-\sigma_{\max} t}{d/2} \frac{y^2}{2}\bigg|_{-d/2}^{d/2} = 0 \tag{3-17d}$$

No internal force ($F = 0$) is induced in a beam subjected to pure bending.

The moment of inertia (I) about the neutral axis is defined as

$$I = \int_{-d/2}^{d/2} y^2(tdy) = \frac{td^3}{12} \tag{3-17e}$$

Moment (M) is the product of force (F) times distance (y). It can be written as an integral:

$$M = \int (y)dF = -\frac{\sigma_{\max}}{(d/2)} \int_{-d/2}^{d/2} ty^2 dy \tag{3-17f}$$

If one uses the definition of moment of inertia given by Eq. (3-17*e*), the moment can be rewritten as

$$M = -\frac{I}{(d/2)} \sigma_{\max} \tag{3-17g}$$

The flexure formula is obtained by eliminating $\sigma_{\max}$ between Eqs. (3-17*c*) and (1-17*g*).

$$\frac{-\sigma}{y} = \frac{M}{I} \tag{3-15}$$

The stress variation along the beam depth is shown in Fig. 3-23*f*. The stress peaks at outermost fibers. The magnitude of the stress is reduced as the neutral axis is approached. A positive moment induces compression in the upper fibers where y is positive and tension in

the lower fiber corresponds to a negative value for y. The flexure formula is routinely used in the design of structural members. Laboratory tests support the assumptions behind this important formula. Its formulation, as mentioned earlier, required the time span of the two centuries between Galileo, Navier, and Coulomb.

3.4 Shear Stress Formula

Consider two wooden planks, one placed on top of the other but not bonded to each other, as shown in Fig. 3-24*a*. The structure is subjected to a load P. The deformed structure when the planks are unbonded is depicted in Fig. 3-24*b*. The unbonded planks slide at the interface. The slide is prevented when the planks are bonded as shown in Fig. 3-24*c*. The bonding prevents motion (slide) but induces shear strain and shear stress at the interface. A beam is an integral block, and it acts like the bonded planks, inducing shear stress. The tendency to slippage is because of differential shear force along the beam depth.

A small elemental beam length (Δx) subjected to moments M and $M + \Delta M$ is shown in Fig. 3-24*d*. The flexure formula is used to replace the moments with stresses ($\sigma = -My/I$) and $\sigma + \Delta\sigma = -(M + \Delta M)y/I$) in Fig. 3-24*e*. The stresses on a small block (k) at height y from the neutral axis are shown in Fig. 3-24*f*. The unequal normal stresses in the left and right side of the block k are balanced by the induction of shear stress (τ) at the bottom of the block. The forces on the left side (F^ℓ), right side (F^r), and bottom (ΔF^b) acting on the block k of thickness t and length dx, as marked in Fig. 3-24*g*, are calculated as

$$F^\ell = \int_A \sigma^\ell dA \tag{3-18a}$$

$$F^r = \int_A \sigma^r dA \tag{3-18b}$$

$$\Delta F^b = \tau t dx \tag{3-18c}$$

The force balance equilibrium condition yields

$$F^\ell - F^r + \Delta F^b = 0 \tag{3-19a}$$

$$\int \sigma^\ell dA - \int \sigma^r dA + \tau t dx = 0 \tag{3-19b}$$

Stress is eliminated in favor of moment using the flexure formula

$$\sigma^\ell = \frac{-My}{I}; \quad \sigma^r = -\left(\frac{M + dM}{I}\right)y$$

$$\left(\frac{1}{I}\right)\int [\{-M + (M + dM)\}ydA + \tau t dx] = 0 \tag{3-19c}$$

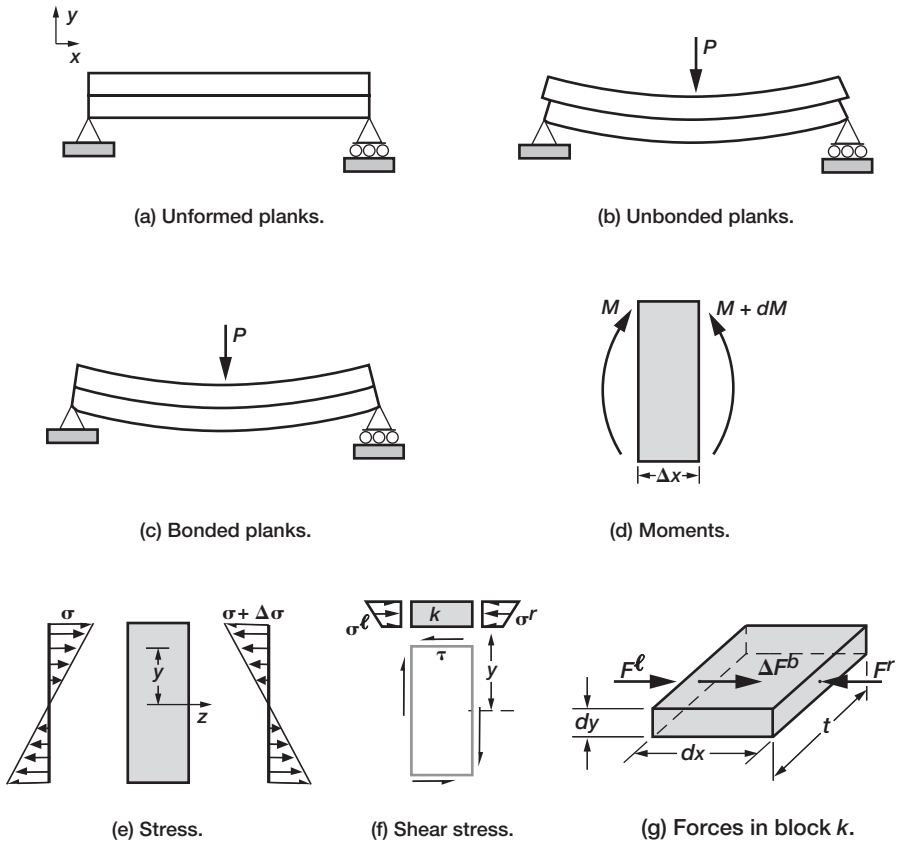

FIGURE 3-24 *Shear stress in a beam.*

$$\frac{1}{I}\int [dMydA + \tau tdx] = 0 \tag{3-19d}$$

Bending moment, M, is taken outside the integration because it has no variation along the beam depth.

$$-\frac{dM}{I}\int [ydA] - \tau tdx = 0 \tag{3-19e}$$

$$\text{define } Q = \int_A ydA \tag{3-19f}$$

$$-\frac{dM}{I}Q - \tau t\,dx = 0 \tag{3-19g}$$

$$\tau = -\frac{dM}{dx}\frac{Q}{It} \tag{3-19h}$$

But from Eq. (3-14*b*)

$$V = -\frac{dM}{dx}$$

The shear formula is obtained by eliminating moment in favor of shear force (V).

$$\tau = \frac{VQ}{It} \tag{3-20}$$

The parameters in the shear stress formula given by Eq. (3-20) are: the thickness of the beam t, and its moment of inertia I. The parameter Q is referred to as the first area of the cross-section defined in Eq. (3-19*f*). The shear force is V, and the shear stress is τ. The flexure and shear formulas are illustrated next.

EXAMPLE 3-9

A simply supported beam of length $\ell = 240$ in. is subjected to a concentrated load ($P = 10$ kip) at the center span, as shown in Fig. 3-25*a*. Determine the BM and SF diagrams. Calculate the normal stress and shear stress assuming a uniform rectangular cross-section with depth $d = 12$ in. and thickness $t = 2$ in.

Solution

The reactions are equal ($R_A = R_B = P/2$) because of symmetry. The bending moment and shear force diagrams are shown in Figs. 3-25*b* and 3-25*c*, respectively. The shear force and bending moment peak at the midspan, $V_{\max} = P = 10$ kip and $M_{\max} = P\ell/4 = 600$ kip-in.

The calculation of stress requires the moment of inertia I and the moment of area Q. For a rectangular cross-section with depth d and thickness t, these two parameters are

$$I = \frac{1}{12}td^3 = \frac{1}{12}(2)(12)^3 = 288 \text{ in.}^4 \tag{3-21a}$$

$$Q(y) = \int ydA = \int_y^{d/2} ytdy = \frac{t}{2}\left(\frac{d^2}{4} - y^2\right) = \left(36 - y^2\right)\text{in.}^3 \tag{3-21b}$$

The moment of inertia is a constant at $I = 288$ in.^{4} The moment of area (Q) for a rectangular cross-section is a quadratic function of the distance (y) from the neutral axis. The parabolic variation of moment of area is shown in Fig. 3-26*a*. It is symmetrical about the neutral axis, and it peaks ($Q = td^2/8 = 36$ in.^{3}) at the neutral axis. It reduces to zero at the top ($y = d/2$) and bottom ($y = -d/2$) fibers.

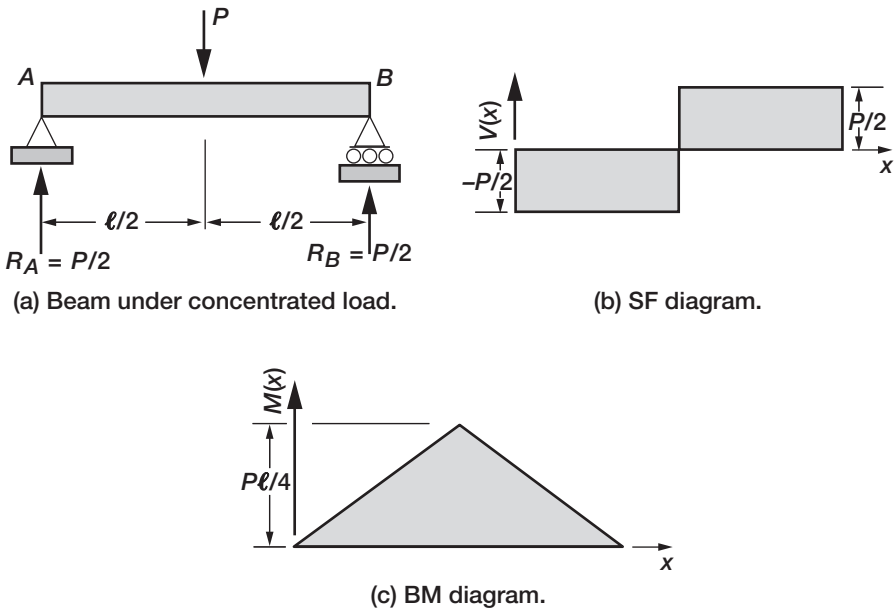

FIGURE 3-25 *SF and BM diagrams for Example 3-9.*

The normal stress and shear stress at the midbeam span that correspond to $M = M_{\max} = 600$ in.-k and $V_{\max} = 10$ kip are as follows:

$$\sigma_{\max} = -\frac{M_{\max} y}{I} = -\frac{600}{288} y = -2.083y \tag{3-22a}$$

$$\tau_{\max} = \frac{V_{\max} Q}{It} = \frac{10\,Q}{288 \times 2} = 17.36 \times 10^{-3}(36 - y^2) \tag{3-22b}$$

$$\tau_{av} = \frac{V_{\max}}{\text{area}} = \frac{10}{(12 \times 2)} = 0.4166\,\text{ksi} \tag{3-22c}$$

$$(\tau_{\max})_{y=0} = 0.625\,\text{ksi} \tag{3-22d}$$

$$(\sigma_{\max}) \quad \text{at} \quad (y = d/2) = -12.5\,\text{ksi} \tag{3-22e}$$

The distribution of the normal and shear stress are shown in Figs. 3-26*c* and 3-26*d*, respectively. From these two diagrams we observe

1. The normal stress due to bending moment M has a linear distribution. It attains a peak value at the top and bottom fibers of the beam, which are equal in magnitude but opposite in sign. The bottom fiber of the beam is in tension, whereas its top fiber is in compression. The bending stress is zero at the neutral axis.

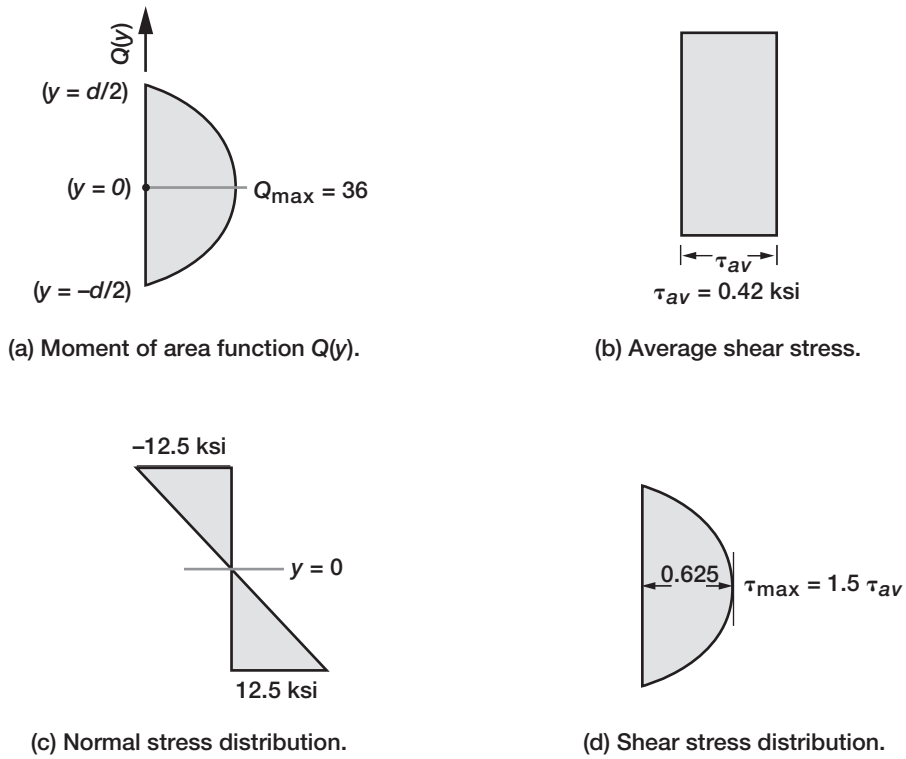

(a) Moment of area function $Q(y)$.

(b) Average shear stress.

(c) Normal stress distribution.

(d) Shear stress distribution.

FIGURE 3-26 *Distributions of normal and shear stresses.*

2. The shear stress due to shear force V has a parabolic distribution. It attains a peak value at the neutral axis. It is zero at both the top and bottom fibers of the beam.
3. The normal stress and the shear stress peak at different locations of the beam cross-section. Bending stress peaks at the extreme fiber where shear stress attains zero value. The shear stress peaks at the neutral axis, where the bending stress is zero.
4. The shear stress at $\tau_{max} = 0.625$ ksi is small in comparison to the normal stress ($\sigma_{max} = -12.5$ ksi).

The average value of shear stress ($\tau_{av} = V/A = 10/24 = 0.42$) can be obtained as the ratio of the shear force V to the cross-sectional area A. For a rectangular cross-section, the maximum shear stress calculated from the formula given by Eq. (3-20) is equal to 1.5 times the average stress.

$$\tau_{max} = 1.5\tau_{av} \tag{3-23}$$

EXAMPLE 3-10

Calculate the maximum normal strain and shear strain in the beam in Example 3-9. Consider the beam material to be steel with Young's modulus $E = 30{,}000$ ksi and Poisson's ratio $\nu = 0.3$.

Solution

$$\varepsilon_{max} = \frac{\sigma_{max}}{E} = \frac{12.5}{30{,}000} = 0.417 \times 10^{-3} = 0.042 \text{ percent}$$

$$\gamma_{max} = \frac{\tau_{max}}{G}$$

$$G = \frac{E}{2(1+\nu)} = \frac{30{,}000}{2.6} = 11.54 \times 10^3 \text{ ksi}$$

$$\gamma_{max} = \frac{0.625}{11.54 \times 10^3} = 0.054 \times 10^{-3} = 0.005 \text{ percent}$$

The material property (consisting of the Young's modulus and Poisson's ratio) is required to calculate strain. For a determinate beam, the material property is not required to calculate moment, shear force, normal stress, and shear stress.

3.5 Displacement in a Beam

The determination of beam displacement, also referred to as "deflection," is credited to Leonhard Euler (1707–1783). Earlier, Jacob Bernoulli (1759–1789) had shown the proportionality of bending moment and curvature with an incorrect proportionality constant. The beam deflection pattern is also called the elastic curve, and it is obtained as the solution to a differential equation. Euler calculated the elastic curve from moment curvature relations, as well as by minimizing the strain energy.

We will derive the governing equation from Hooke's law and also from the moment curvature relation. The underlying principle is the same in both methods with some variation in the details. The basic assumption is illustrated through the example of a simply supported beam, shown in Fig. 3-27*a*. The deflection is due to bending moment only. Shear strain and the associated shear deflection are neglected. The deformation along the beam depth is neglected. For example, the beam deflection ($v(x)$) at span location x is the same along the depth at A, B, and N, ($v(x) = v^A(x) = v^B(x) = v^N(x)$); see Fig. 3-27*b*. In other words, deflection pertains to the displacement of the neutral axis, as shown in Fig. 3-27*c*, and it is referred to as the elastic curve.

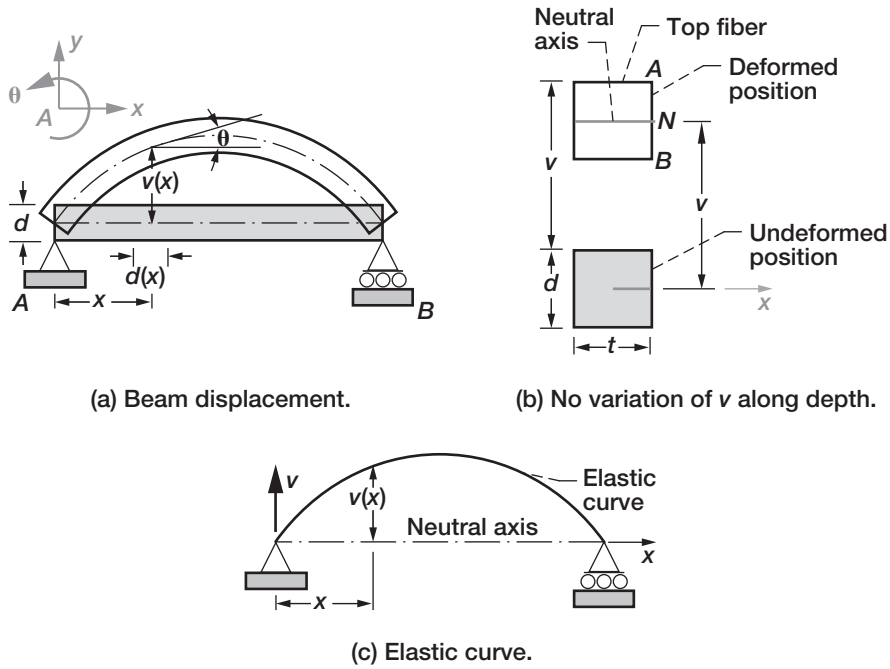

(a) Beam displacement.

(b) No variation of v along depth.

(c) Elastic curve.

FIGURE 3-27 *Deflection in a beam.*

Strain in a Beam

Hooke's law, which relates the stress and strain variables, is used to back-calculate strain from stress that is already known. Normal strain (ε) due to bending is obtained from the stress-strain formula ($\sigma = E\varepsilon$) as

$$\frac{-(\sigma = E\varepsilon)}{y} = \frac{M}{I}$$

$$\frac{-\varepsilon}{y} = \frac{M}{EI} \tag{3-24a}$$

$$-\varepsilon = \frac{My}{EI} \tag{3-24b}$$

The strain, like the stress, has a linear variation over the depth of the beam. The quantity EI, which is the product of the Young's modulus E and the moment of inertia I in the strain formula is called the bending rigidity of a beam. Strain is inversely proportional to the beam rigidity EI, as shown in Eq. (3-24b). For a beam made of a rigid material like stone, the rigidity (EI) approaches infinity while the strain is reduced to zero.

Shear strain γ in a beam is obtained using the shear stress and shear strain formula ($\tau = G\gamma$). The shear modulus (G) and Young's modulus (E) are related by the formula

$G = 0.5E/(1 + \nu)$. For metals like steel and aluminum, Poisson's ratio can be approximated at $\nu = 0.3$. For such materials, the shear modulus is 38.5 percent of the Young's modulus ($G = 0.3846E$). Shear strain in a beam is

$$\tau = G\gamma = \frac{VQ}{It} \tag{3-25}$$

$$\gamma = \frac{VQ}{GIt} = 2(1 + \nu)\frac{VQ}{EIt} \tag{3-26}$$

The shear strain follows the parabolic variation of shear stress over the depth of the beam. In strength of material analysis, the shear strain is neglected ($\gamma = 0$).

Method 1—Hooke's Law

In this method, the differential equation for the elastic curve is obtained by using Hooke's law that relates stress and strain.

Consider an elemental beam block as shown in Fig. 3-28*a*. According to beam theory, a plane section before deformation remains plane even after deformation, and the undeformed right angle ($boa = \pi/2$) is maintained after deformation ($b'oa' = \pi/2$). The axial displacement u measured from o–b (which is parallel to the y-coordinate axis) is shown in Fig. 3-28*b*. It is zero at the neutral axis and has a linear variation along the beam depth ($u = \theta y$). Normal strain (ε), which is compressive, is obtained as the derivative of displacement (u), which is negative.

$$-\varepsilon = \frac{-du}{dx} \tag{3-27a}$$

Slope is equal to the derivative of the transverse displacement (v) because both angles $< boa$ and $< b'oa'$ are right angles.

$$\text{Slope} \quad \theta = \frac{dv(x)}{dx} \tag{3-27b}$$

$$-u = \theta y \quad \left(-\frac{d}{2} \le y \le \frac{d}{2}\right) \tag{3-27c}$$

$$-u = y\frac{dv}{dx} \tag{3-27d}$$

Hooke's law is used to relate strain to stress, which is obtained from the beam formula.

$$-\varepsilon = \frac{-du}{dx} = y\frac{d^2v}{dx^2} = -\frac{\sigma}{E} = \frac{My}{EI} \tag{3-27e}$$

$$\frac{M}{EI} = \frac{d^2v}{dx^2} \tag{3-27f}$$

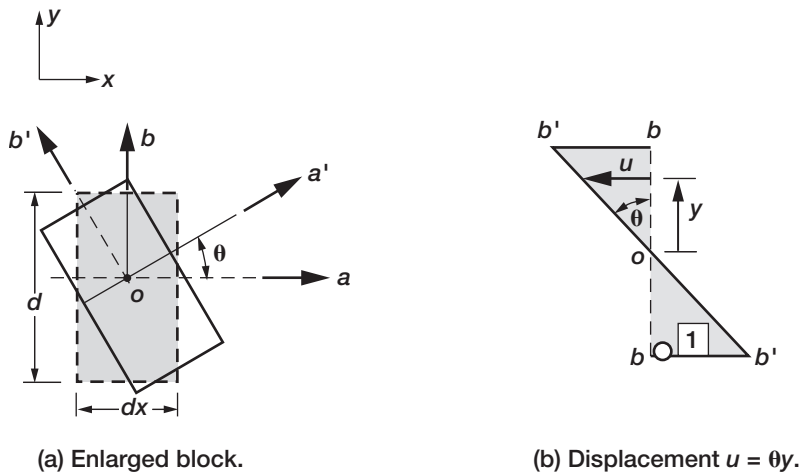

FIGURE 3-28 *Strain displacement relationship for a beam.*

The axial displacement u is small, but it plays a critical role in the derivation of the moment curvature relation given by Eq. (3-27f). The steps used to derive the moment curvature relationship can be summarized as:

1. The slope is defined as the derivative of the transverse displacement v with respect to the x-coordinate, as in Eq. (3-27b).
2. The axial displacement at a location y given by Eq. (3-27c) is obtained from the geometry in Fig. 28(b), which defines the undeformed orientation (bb) and the deformed orientation ($b'b'$).
3. Strain ε is related to the derivative of the transverse displacement (v), the stress (σ/E), and the moment (My/EI) in Eq. (3-27e).
4. Simplification of Eq. (3-27e) yields the moment curvature relationship for a beam.

$$\kappa = \frac{d^2v}{dx^2} = \frac{M}{EI} \tag{3-28}$$

In the linear theory, the term ($d^2v/dx^2 = \kappa$) represents the beam curvature.

Method 2—Geometrical Derivation

The moment curvature relation can be also be derived via the radius of curvature ρ. The elastic curve of the beam is shown in Fig. 3-29a. An elemental beam length in an enlarged scale is depicted in Fig. 3-29b. The change in slope in the elemental length is $\Delta\theta$. The rate of change of the slope with respect to the beam length is the inverse of the radius of curvature ρ.

$$(\mathcal{L}t\Delta s \to 0)\frac{\Delta\theta}{\Delta s} = \frac{d\theta}{ds} \simeq \frac{d\theta}{dx} = \frac{1}{\rho} \tag{3-29a}$$

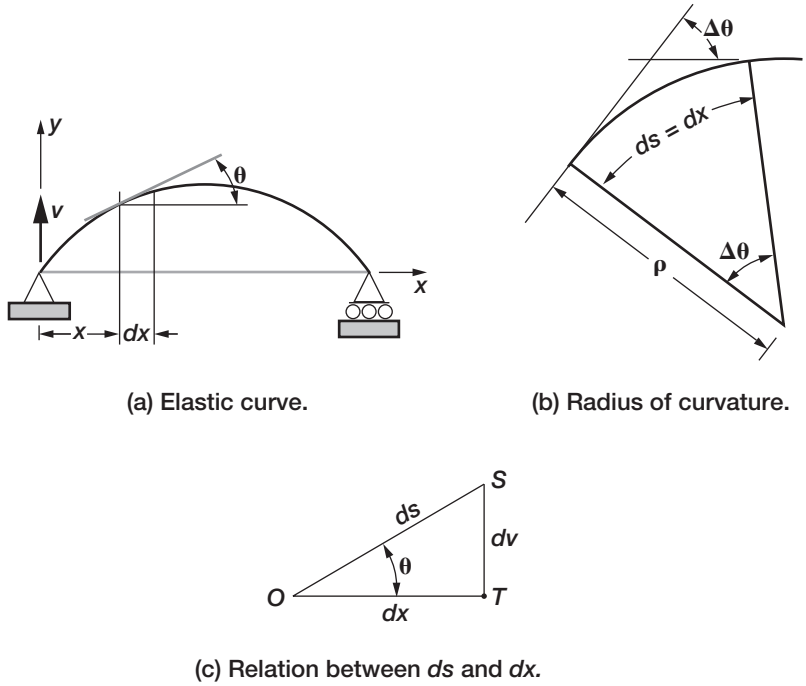

(a) Elastic curve.

(b) Radius of curvature.

(c) Relation between *ds* and *dx*.

FIGURE 3-29 *Radius of curvature of the elastic curve.*

Angle θ is eliminated in favor of displacement using Eq. (3-27b) to obtain

$$\frac{1}{\rho} = \frac{d^2v}{dx^2} = \kappa = \frac{M}{EI} \tag{3-29b}$$

Equation (3-29) adds the reciprocal of the radius of curvature into the moment of curvature relation given by Eq. (3-28).

Remarks on the Moment Curvature Relationship (MCR)

The MCR given by Eq. (3-29) assumes that $ds = dx$, $\theta = \tan\theta$, and $\cos\theta = 1$ because of the linear small displacement theory. MCR can be derived without the assumptions. The arc length (ds), axial distance (dx), and included angle (θ) are marked in Fig. 3-29*c*. Because dx is small and in the limit, the length (ds) can be assumed to be the diagonal of the right triangle *OST*. The following relationships can be written for the triangle *OST*.

$$\cos\theta = \frac{dx}{ds}$$

$$\tan\theta = \frac{dv}{dx}$$

$$ds^2 = dx^2 + dv^2 \tag{3-30a}$$

$$\frac{d\theta}{ds} = \frac{d}{ds}\left(\tan^{-1}\frac{dv}{dx}\right) = \frac{d}{dx}\left(\tan^{-1}\frac{dv}{dx}\right)\frac{dx}{ds} \tag{3-30b}$$

Differential calculus yields

$$\frac{d}{dx}\left(\tan^{-1}\frac{dv}{dx}\right) = \frac{\frac{d^2v}{dx^2}}{1 + \left(\frac{dv}{dx}\right)^2} \tag{3-30c}$$

Differentiate $ds^2 = dx^2 + dv^2$ with respect to x to obtain

$$2ds\frac{ds}{dx} = 2dx + 2dv\frac{dv}{dx} \tag{3-30d}$$

Divide both sides of Eq. (3-30*d*) by dx and simplify to obtain

$$\left(\frac{ds}{dx}\right)^2 = 1 + \left(\frac{dv}{dx}\right)^2$$

$$\frac{ds}{dx} = \left[1 + \left(\frac{dv}{dx}\right)^2\right]^{1/2} \tag{3-30e}$$

Substitute Eqs. (3-30*c*) and (3-30*e*) into Eq. (3-30*b*) to obtain

$$\frac{d\theta}{ds} = \frac{\frac{d^2v}{dx^2}}{\left[1 + \left(\frac{dv}{dx}\right)^2\right]^{3/2}} \tag{3-30f}$$

Curvature, by definition, is $\kappa = d\theta/ds = 1/\rho$.

The curvature can be written as

$$\kappa = \frac{1}{\rho} = \frac{\frac{d^2v}{dx^2}}{\left[1 + \left(\frac{dv}{dx}\right)^2\right]^{3/2}} \tag{3-30g}$$

The curvature when $(dv/dx)^2$ is small compared with unity ($1 \ll (dv/dx)^2$) becomes the linear theory formula ($\kappa = d^2v/dx^2$). Our treatment uses the simple formula.

In the moment curvature relation, the bending moment is expressed in terms of the shear force (V) and the uniformly distributed load (p) using the appropriate definitions:

$$\frac{dV}{dx} = -p$$

$$\frac{dM}{dx} = -V$$

$$\frac{d^2M}{dx^2} = -\frac{dV}{dx} = p$$

$$\frac{d^2v}{dx^2} = \frac{M}{EI}$$

$$\frac{d^3v}{dx^3} = \frac{1}{EI}\frac{dM}{dx} = -\frac{V}{EI}$$

$$\frac{d^4v}{dx^4} = \frac{d^2}{dx^2}\left(\frac{M}{EI}\right) = \frac{1}{EI}\frac{d^2M}{dx^2}$$

$$\frac{d^4v}{dx^4} = \frac{p}{EI}$$

The three important formulas to calculate displacement are as follows:

1. For distributed load (p)

$$\frac{d^4v}{dx^4} = \frac{p}{EI} \tag{3-31a}$$

2. For shear force (V)

$$\frac{d^3v}{dx^3} = -\frac{V}{EI} \tag{3-31b}$$

3. For moment (M)

$$\frac{d^2v}{dx^2} = \frac{M}{EI} \tag{3-31c}$$

The relationship between the fourth derivative of the displacement (v) with respect to the x-coordinate, which is equal to the ratio of the uniformly distributed load p to the beam rigidity EI is given by Eq. (3-31a). Equation (3-31a) is a fourth-order ordinary differential equation. Solution of this equation requires four boundary conditions (BC). Displacement follows the load, or (p and v) have the same direction.

The moment curvature relation given by Eq. (3-31c), is integrated to obtain the elastic curve of a beam. The process is illustrated for different types of beams subjected to various types of loads.

EXAMPLE 3-11: Simply Supported Beam Subjected to a Uniformly Distributed Load *p*

A simply supported beam of length ℓ and rigidity EI is subjected to a uniformly distributed load of intensity p, as shown in Fig. 3-30a. Calculate its elastic curve. Note: The gravity load is specified as $-p$, or load p is along the y-coordinate direction.

Solution

The four boundary conditions (BC) of the beam shown in Fig. 3-30a are as follows:

$$BC1: \quad \text{at } x = 0, \quad v_A = 0$$

$$BC2: \quad \text{at } x = \ell, \quad v_B = 0$$

$$BC3: \quad \text{at } x = 0, \quad M = \frac{d^2v}{dx^2} = 0$$

$$BC4: \quad \text{at } x = \ell, \quad M = \frac{d^2v}{dx^2} = 0$$

The first boundary condition ($BC1$) constrains the displacement to zero at $x = 0$, which corresponds to A in Fig. 3-30a. Likewise, the second condition ($BC2$) constrains the displacement to zero at $x = \ell$, which corresponds to B in Fig. 3-30a. For a simply supported beam, the moment is zero ($M = 0$) at A and B. When the moment is zero, the curvature can be set to zero because $M = EI\ d^2v/dx^2$ and the stiffness is not zero ($EI \neq 0$). We replace moment to obtain the conditions imposed on the curvatures. The third condition ($BC3$) constrains the curvature to zero at $x = 0$. Likewise, the fourth condition ($BC4$) constrains the curvature to zero at $x = \ell$.

The fourth-order differential equation, Eq. (3–31a), and the four boundary conditions define the displacement determination problem of the beam. The fourth-order differential equation is integrated in four steps to obtain the following four equations:

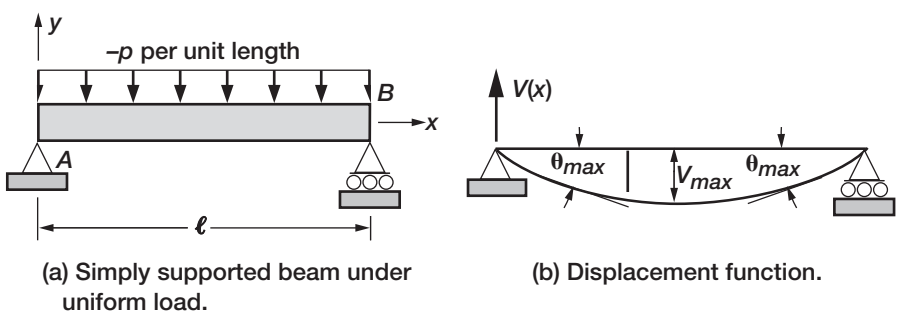

FIGURE 3-30 *Displacement function for Example 3-11.*

$$EI\frac{d^3v}{dx^3} = px + C_1 \tag{3-32a}$$

$$EI\frac{d^2v}{dx^2} = p\frac{x^2}{2} + C_1x + C_2 \tag{3-32b}$$

$$EI\frac{dv}{dx} = p\frac{x^3}{6} + C_1\frac{x^2}{2} + C_2x + C_3 \tag{3-32c}$$

$$EI\ v(x) = p\frac{x^4}{24} + C_1\frac{x^3}{6} + C_2\frac{x^2}{2} + C_3x + C_4 \tag{3-32d}$$

The final displacement $v(x)$, which is given by Eq. (3-32d), is a fourth-order polynomial. It is expressed in terms of four constants (C_1 to C_4), which are also called the constants of integration. These four constants are obtained from the four boundary conditions as follows:

$$BC1: \quad v(x=0) = 0 \quad \text{yields:} \quad C_4 = 0$$

$$BC2: \quad v(x=\ell) = 0: \quad p\frac{\ell^4}{24} + C_1\frac{\ell^3}{6} + C_2\frac{\ell^2}{2} + C_3\ell = 0$$

$$BC3: \quad \frac{d^2v}{dx^2} = 0: \quad C_2 = 0$$

$$BC4: \quad \frac{d^2v}{dx^2} = 0: \quad p\frac{\ell^2}{2} + C_1\ell = 0 \quad \text{or} \quad C_1 = -p\frac{\ell}{2}$$

The value of the constant ($C_3 = p\ell^3/24$) is obtained from $BC2$ by substituting $C_2 = C_4 = 0$ and $C_1 = -p\ell/2$. The values for the four constants are

$$C_1 = -p\ell/2$$

$$C_2 = 0$$

$$C_3 = p\ell^3/24$$

$$C_4 = 0$$

Substitution of the value for the four constants into Eq. (3-32d) yields the displacement function $v(x)$ as

$$v(x) = \frac{px}{24EI}\left(x^3 - 2\ell x^2 + \ell^3\right) \tag{3-33}$$

The displacement function is a cubic polynomial in the x-coordinate. The location of the maximum value of the displacement is obtained by setting its first derivative to zero:

$$\frac{dv}{dx} = \frac{p}{24EI}\left(4x^3 - 6\ell x^2 + \ell^3\right) = 0 \tag{3-34a}$$

$$(x - 0.5\ell)(x - 1.37\ell)(x + 0.37\ell) = 0 \tag{3-34b}$$

$$x = 0.5\ell \tag{3-34c}$$

Only the solution for $x = 0.5\ell$ is valid. The other two solutions ($x = 1.37\ell$ and $x = -0.37\ell$) are impractical because one is more than the span and the other is negative. Displacement attains the maximum value ($v_{\max} = 5p\ell^4/384EI$) at the midspan, where the slope is zero.

$$v_{\max} = v\left(x = \frac{\ell}{2}\right) = \frac{5p\ell^4}{384EI} \tag{3-34d}$$

$$\theta\left(x = \frac{\ell}{2}\right) = 0 \tag{3-34e}$$

$$\theta_{\max} = \theta(x = 0) = \left.\frac{dv}{dx}\right|_{x=0} = \frac{p\ell^3}{24EI} \tag{3-34f}$$

$$\theta(x = \ell) = \left.\frac{dv}{dx}\right|_{x=\ell/2} = -\frac{p\ell^3}{24EI} \tag{3-34g}$$

The slope peaks at $x = 0$ and $x = \ell$, with magnitude $\theta_{\max} = p\ell^3/24EI$. The elastic curve is symmetrical about the midspan as depicted in Fig. 3-30*b*. In Eq. (3-33), both displacement and load are positive. Displacement has a tendency to follow the direction of load. Displacement as shown in Fig. 3-30*b* is along the negative *y*-coordinate direction because load is negative ($-p$).

EXAMPLE 3-12

A cantilever beam is subjected to a uniformly distributed load of intensity $-p$. It has a length of ℓ and a rigidity of EI, as shown in Fig. 3-31*a*. Calculate its elastic curve.

Solution

The displacement solution (expressed in terms of the four constants) as given by Eq. (3-32*d*) is still valid. The four constants have to be adjusted for the four boundary conditions of the cantilever beam. The displacement is zero at the origin. For a cantilever, the slope at the origin is zero ($\theta = 0$ at $x = 0$). The free end of a cantilever beam can neither resist a moment nor a shear force ($M = V = 0$ at $x = \ell$). These four boundary conditions in terms of the displacement function are as follows:

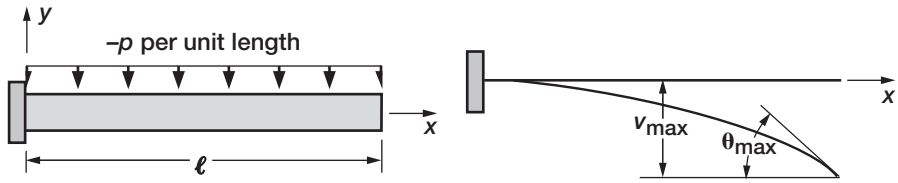

(a) Cantilever beam under uniform load. (b) Displacement function.

FIGURE 3-31 *Displacement function for Example 3-12.*

$$BC1: \quad \text{at } x = 0, \quad v = 0 \tag{3-35a}$$

$$BC2: \quad \text{at } x = 0, \quad \theta = \frac{dv}{dx} = 0 \tag{3-35b}$$

$$BC3: \quad \text{at } x = \ell, \quad \frac{M}{EI} = \frac{d^2v}{dx^2} = 0 \tag{3-35c}$$

$$BC4: \quad \text{at } x = \ell, \quad \frac{V}{EI} = -\frac{d^3v}{dx^3} = 0 \tag{3-35d}$$

Substitution of the displacement function into the boundary conditions yields the following equations:

$$BC1 \text{ yields } C_4 = 0 \tag{3-35e}$$

$$BC2 \text{ yields } C_3 = 0 \tag{3-35f}$$

$$BC3 \text{ yields } p\frac{\ell^2}{2} + C_1\ell + C_2 = 0 \tag{3-35g}$$

$$BC4 \text{ yields } p\ell + C_1 = 0 \tag{3-35h}$$

Solution of the four BCs provides values of the integration constants:

$$C_1 = -p\ell \tag{3-35i}$$

$$C_2 = \frac{p\ell^2}{2} \tag{3-35j}$$

$$C_3 = C_4 = 0 \tag{3-35k}$$

The displacement function for the cantilever is obtained as

$$v(x) = \frac{px^2}{24EI}\left(x^2 - 4x\ell + 6\ell^2\right) \tag{3-36a}$$

The magnitude of the displacement and slope are maximum at the free end of the cantilever, as shown in Fig. 3-31*b*.

$$v_{\max} = v(x = \ell) = \frac{p\ell^4}{8EI} \tag{3-36b}$$

$$\theta_{\max} = \frac{dv}{dx}(x = \ell) = \frac{p\ell^3}{6EI} \tag{3-36c}$$

The displacement function shown in Fig. 3-12*a* is negative because the distributed load is a gravity load ($-p$).

EXAMPLE 3-13

A simply supported beam is subjected to a concentrated gravity load P at the two-thirds span location, as shown in Fig. 3-32*a*. It has a length of ℓ and a rigidity of EI. Calculate its elastic curve.

Solution

The moment curvature relationship given by Eq. (3-31*c*) is used to solve the problem. The bending moment diagram of the beam is shown in Fig. 3-32*b*. The moment function is defined separately for span segments AC and CB.

Span AC **($0 \le x \le 2a$):**

$$M(x) = \frac{P}{3}x \tag{3-37a}$$

Span CB **($2a \le x \le 3a$):**

$$M(x) = \frac{P}{3}x - P(x - 2a) = \frac{2P}{3}(3a - x) \tag{3-37b}$$

The displacement function has to be defined separately in each span segment because of the discrete nature of the moment functions. The elastic curve is obtained by integrating the moment curvature relationship given by Eq. (3-31*c*).

Span AC **($0 \le x \le 2a$):**

$$\frac{d^2v}{dx^2} = \frac{M}{EI} = \frac{Px}{3EI} \tag{3-37c}$$

$$\frac{dv}{dx} = \frac{Px^2}{6EI} + C_1 \tag{3-37d}$$

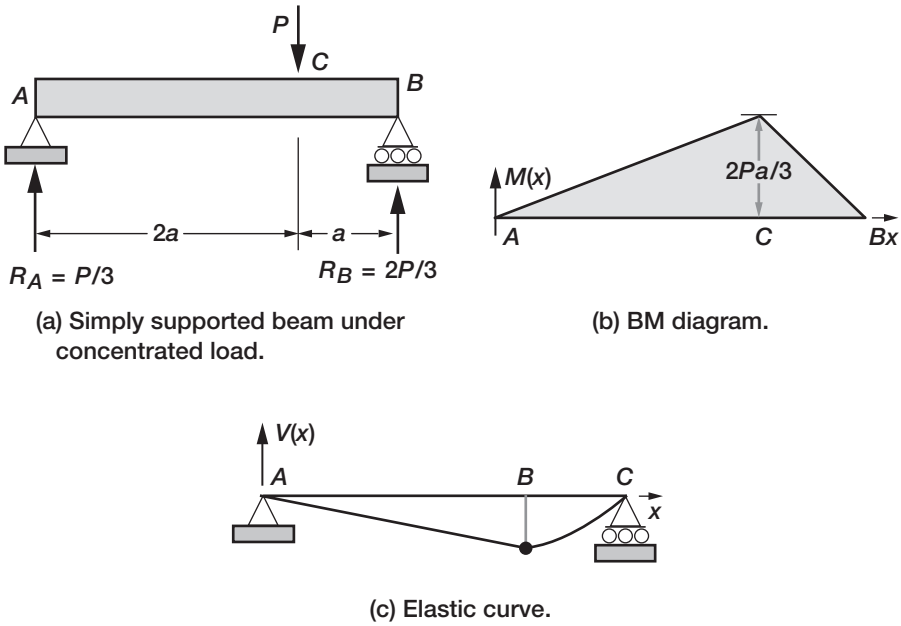

(a) Simply supported beam under concentrated load.

(b) BM diagram.

(c) Elastic curve.

FIGURE 3-32 *Elastic curve diagrams for Example 3-13.*

$$v = \frac{Px^3}{18EI} + C_1 x + C_2 \tag{3-37e}$$

SpanCB $(2a \leq x \leq (3a = \ell))$***:***

$$\frac{d^2v}{dx^2} = \frac{2P}{3EI}(3a - x) \tag{3-37f}$$

$$\frac{dv}{dx} = \frac{2P}{3EI}\left(3ax - \frac{x^2}{2}\right) + C_3 \tag{3-37g}$$

$$v = \frac{2P}{3EI}\left(\frac{3ax^2}{2} - \frac{x^3}{6}\right) + C_3 x + C_4 \tag{3-37h}$$

The elastic curve is defined in terms of four constants. These are C_1 and C_2 for segment AC, and C_3 and C_4 for segment CB. The moment and shear force boundary conditions cannot be used when the displacement calculations are initiated from the moment function because these conditions were already used during the calculation of the moment functions. Only the displacement and slope conditions can be used. The slope conditions cannot be used because these are not known at either $x = 0$ or $x = \ell$. The two displacement boundary conditions that can be used are

$$BC1: \quad \text{at } x = 0, \quad v = 0 \tag{3-38a}$$

$$BC2: \quad \text{at } x = \ell, \quad v = 0 \tag{3-38b}$$

Two additional boundary conditions are required to calculate the four constants of integration. These conditions come from displacement continuity conditions. For an elastic structure, displacement is always continuous. The continuity condition is satisfied by specifying the displacement and slope to be finite at every location (x) in the beam span.

$$v(x) = \text{finite} \tag{3-39a}$$

$$\frac{dv(x)}{dx} = \text{finite} \tag{3-39b}$$

The conditions given by Eqs. (3-39a) and (3-39b) are applied to the beam at location C, at $x = 2a$, which is common to the two beam segments. Let the displacement calculated at C in the span segment AC be v^{left} ($x = 2a$). Designate the same displacement, but calculate in it segment CB as v^{right} ($x = 2a$). The displacement continuity condition at C is specified as

$$BC3: \quad v^{\text{left}}|_{x=2a} = v^{\text{right}}|_{x=2a} \tag{3-38c}$$

Likewise, the continuity of the slope at C yields

$$BC4: \quad \frac{dv^{\text{left}}}{dx}\Big|_{x=2a} = \frac{dv^{\text{right}}}{dx}\Big|_{x=2a} \tag{3-38d}$$

The four constants of integration (C_1 to C_4) are obtained from the four boundary conditions given by Eqs. (3-38a) to (3-38d). These four equations are simplified to obtain

$$BC1 \text{ yields:} \quad C_2 = 0 \tag{3-40a}$$

$$BC2 \text{ yields:} \quad \frac{2P}{3EI}\left(\frac{27a^3}{2} - \frac{27a^3}{6}\right) + 3C_3a + C_4 = 0$$

or,

$$\frac{6Pa^3}{EI} + 3C_3a + C_4 = 0 \tag{3-40b}$$

$BC3$ is simplified to obtain

$$2C_1a - 2C_3a - C_4 = -\frac{8Pa^3}{3EI} \tag{3-40c}$$

Likewise, $BC4$ yields

$$C_1 - C_3 = -\frac{2Pa^2}{EI} \tag{3-40d}$$

The solution to Eqs. (3-40a) to (3-40d) yields the values of the four constants.

$$C_1 = \frac{4}{9EI}Pa^2 \tag{3-41a}$$

$$C_2 = 0 \tag{3-41b}$$

$$C_3 = \frac{22Pa^2}{9EI} \tag{3-41c}$$

$$C_4 = -\frac{4Pa^3}{3EI} \tag{3-41d}$$

The displacement functions of the beam are obtained by substituting the integration constants in Eqs. (3-37e) and (3-37h).

For span segment AC ($0 \le x \le 2a$),

$$v(x) = \frac{P}{18EI}\left(x^3 - 8a^2x\right) \tag{3-42a}$$

For span segment CB ($2a \le x \le 3a$),

$$v(x) = \frac{P}{9EI}\left(-x^3 + 9ax^2 - 22a^2x + 12a^3\right) \tag{3-42b}$$

The elastic curve is shown in Fig. 3-32c. In Eq. (3-42), the load direction has been incorporated, or $-P$ is along the positive y-coordinate axis.

It can be assumed from observation that the displacement peaks in the longer segment AC. The location of maximum displacement x_m is obtained by setting the slope to zero.

$$\frac{dv}{dx} = 0 \ (0 \le x \le 2a)$$

$$\frac{P}{18EI}\left(3x^2 - 8a^2\right) = 0 \tag{3-42c}$$

$$x_m = \pm\sqrt{\frac{8}{3}}\,a$$

This location (x_m) has two values, but the negative value is not admissible. The value of $x_m = 1.63a$, which is inside segment AC, is admissible.

$$x_m = 1.63a \tag{3-42d}$$

The maximum displacement for gravity load (P) is

$$v_{\max} = v(x_m) = -0.484\frac{Pa^3}{EI} \tag{3-42e}$$

3.6 Thermal Displacement in a Beam

A beam can deform because of a change of temperature. Consider the simply supported beam shown in Fig. 3-33*a*, which is subjected to a uniform temperature variation of T^u at the top fiber and T^ℓ at the bottom fiber and has a linear variation across the depth d, as shown in Fig. 3-33*b*. The Young's modulus is E, and the coefficient of thermal expansion is α. The deformation due to the temperature variation is sketched in Fig. 3-33*c*. The beam deflects along the positive y-direction because the upper fiber with the higher temperature ($T^u > T^\ell$) expands more than the lower fiber. The problem is to calculate the displacement function.

Temperature variation induces a normal thermal strain ($\varepsilon^t = \alpha\Delta T$), but no shear strain is induced ($\gamma^t = 0$). In a determinate structure, the solution of the equilibrium equations yields the internal force variables. Because the temperature variation does not affect the equilibrium equations, the internal forces are not altered. For a determinate structure, the internal forces are zero when it is only subjected to temperature variation. No thermal stresses are induced because a determinate beam does not offer any resistance to the thermal deformation. It undergoes free thermal deformation, which is expansion at the top fiber and contraction in the bottom fiber. This process bows the beam upwards as shown in Fig. 3-33*c*.

The linear temperature variation with a mean temperature T_0 can be written as

$$T_0 = \frac{T^u + T^\ell}{2} \tag{3-43a}$$

$$\Delta T(y) = T_0 + \frac{\left(T^u - T^\ell\right)}{d}y \tag{3-43b}$$

The mean temperature expands the beam length, but it makes no contribution to flexural stress. There is no flexural deformation when the temperatures are equal at the upper and lower fibers of the beam cross-section.

Consider the deformation of an elemental length dx as shown in Fig. 3-33*d*. The temperature elongates the top fiber to ΔS^u and contracts the bottom fiber to ΔS^ℓ from its initial dimension of $\Delta S = \Delta x$ at the neutral axis. The thermal deformations sketched in Fig. 3-33*d* are as follows

$$\Delta S^u = \Delta T\left(y = \frac{d}{2}\right)\alpha\Delta x = \alpha T^u \Delta x \tag{3-43c}$$

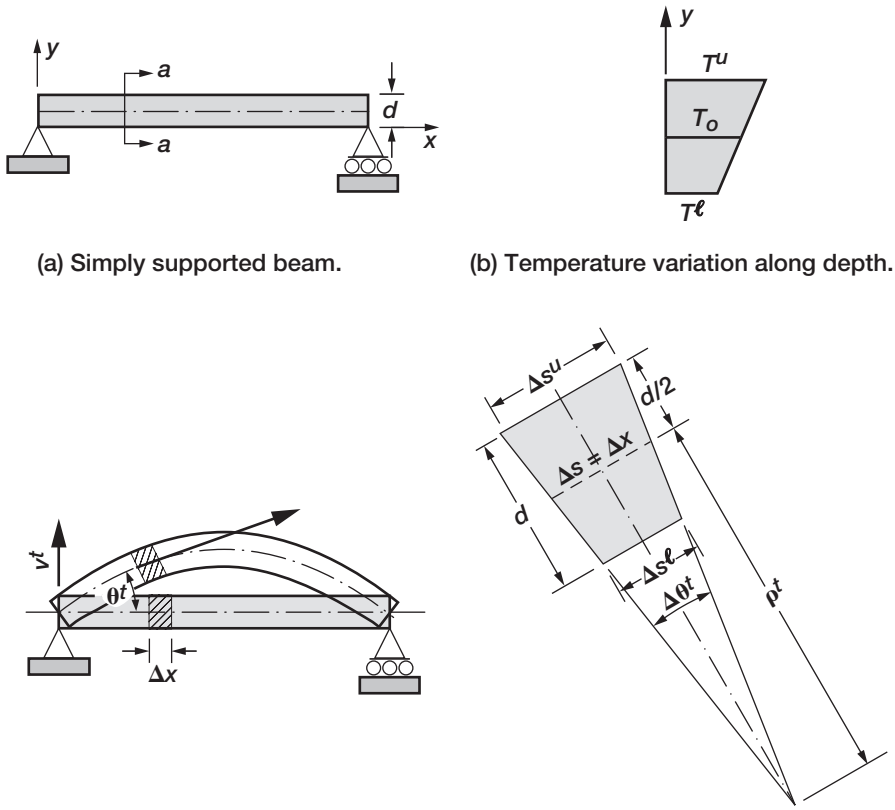

(a) Simply supported beam.

(b) Temperature variation along depth.

(c) Thermal deformation.

(d) Enlarged view of deformation.

FIGURE 3-33 *Thermal deformation in a simply supported beam.*

Likewise,

$$\Delta S^\ell = \alpha T^\ell \Delta x \tag{3-43d}$$

$$\Delta\theta^t = -\frac{dS^u - dS^\ell}{d} = -\alpha\frac{\left(T^u - T^\ell\right)}{d}\Delta x \tag{3-43e}$$

$$\mathcal{L}t(\Delta x \to 0)\frac{\Delta\theta^t}{\Delta x} = \frac{d\theta^t}{dx} = -\alpha\frac{\left(T^u - T^\ell\right)}{d}$$

The slope θ has a maximum value at $x = 0$ in Fig. 3-33*c*, and it decreases with an increase in the x-coordinate. This fact, as can be observed, is accounted for by the negative sign in Eq. (3-43*e*).

The thermal curvature (ρ^t) can be expressed in terms of temperature as

$$\frac{1}{\rho^t} = k^t = \frac{d^2 v^t}{dx^2} = \mathcal{L}t_{\Delta x \to 0} \frac{\Delta\theta^t}{\Delta x} = \frac{d\theta^t}{dx} \tag{3-43f}$$

$$\frac{d^2 v^t}{dx^2} = -\alpha \frac{\left(T^u - T^\ell\right)}{d} \tag{3-43g}$$

The curvature temperature relation given by Eq. (3-43*f*) can be integrated to obtain the thermal displacement (v^t) of the beam. The thermal displacement v^t is independent of the Young's modulus but depends on the coefficient of thermal expansion. The integration of the curvature temperature relationship yields the slope and the displacement as

$$\theta^t = \frac{dv^t}{dx} = -\alpha \frac{\left(T^u - T^\ell\right)}{d} x + C_1 \tag{3-44a}$$

$$v^t = -\frac{\alpha\left(T^u - T^\ell\right)}{2d} x^2 + C_1 x + C_2 \tag{3-44b}$$

The thermal slope (θ^t) is expressed in terms of a single integration constant C_1. The thermal displacement is expressed in terms of two constants (C_1 and C_2). The treatment here assumed a uniform temperature distribution along the top and bottom fibers of the beam. This temperature variation induces linear variation in slope and a quadratic variation in the displacement. A nonuniform temperature variation along the beam length ($T^u(x)$ and $T^\ell(x)$) can be accommodated during the integration of the curvature displacement relationship.

The constants (C_1 and C_2) are adjusted for a simply supported beam as

$$BC1: \quad v^t(x = 0) = 0 \quad C_2 = 0 \tag{3-45a}$$

$$BC2: \quad v^t(x = \ell) = 0 \quad C_1 = \frac{\alpha\left(T^u - T^\ell\right)}{2d} \ell \tag{3-45b}$$

$$v^t = \frac{\alpha}{2d}\left(T^u - T^\ell\right)\left(x\ell - x^2\right) \tag{3-46}$$

The simply supported beam bows upward when the temperature of the upper fiber is greater than the temperature of the lower fiber ($T^u > T^\ell$). Its displacement at midspan is

$$v^t\left(x = \frac{\ell}{2}\right) = \frac{\alpha}{8d}\left(T^u - T^\ell\right)\ell^2 \tag{3-47}$$

A simply supported beam bows downward when the upper-fiber temperature is smaller than the lower fiber ($T^u < T^\ell$).

The thermal deflection of a cantilever beam is obtained by adjusting the boundary conditions as follows:

$$BC1: \quad v^t(x = 0) = 0 \quad C_2 = 0 \tag{3-48a}$$

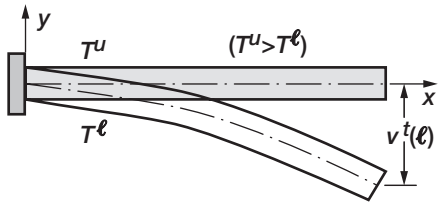

FIGURE 3-34 *Thermal deformation in a cantilever beam.*

$$BC2: \quad \theta^t(x = \ell) = 0 \quad C_1 = 0 \tag{3-48b}$$

$$v^t = -\frac{\alpha}{2d}\left(T^u - T^\ell\right)x^2 \tag{3-48c}$$

$$v^t(x = \ell) = -\frac{\alpha}{2d}\left(T^u - T^\ell\right)\ell^2 \tag{3-48d}$$

The thermal displacement for a higher upper-fiber temperature ($T^u > T^\ell$) is sketched in Fig. 3-34. The beam deflects in the negative y-coordinate direction because the fibers above the neutral axis are stretched. The deflection will be in the positive y-coordinate direction when the lower-fiber temperature is higher ($T^u > T^\ell$).

EXAMPLE 3-14

Calculate the thermal displacement in the simply supported beam shown in Fig. 3-33a for the following parameters. Length ($\ell = 200$ in.), depth ($d = 7$ in.), upper and lower fiber temperatures are ($T^u = 200°$F and $T^\ell = 100°$F) and coefficient of thermal expansion ($\alpha = 6.6 \times 10^{-6}$°F). Calculate the response when the simply supported beam is replaced by a cantilever beam shown in Fig. 3-34.

Solution

The displacement function for the simply supported beam is obtained by substituting numerical values for the coefficient of thermal expansion, depth, temperatures, and length in Eq. (3-46).

$$v^t = 0.47 \times 10^{-4}\left(200x - x^2\right) \tag{3-49a}$$

Differentiation of the displacement function yields the slope.

$$\theta^t = 0.94 \times 10^{-4}(100 - x) \tag{3-49b}$$

Maximum displacement occurs at mid span ($v^t{}_{\max} = 0.47$ in.). The slope at ($x = 0$) is ($\theta_0 = 9.43 \times 10^{-3}$ rad), and at ($x = 200$ in.) it is ($\theta_{200} = -9.43 \times 10^{-3}$ rad). The beam

bows outwards because the upper fiber with higher temperature ($T^u = 200°\text{F}$) stretches more than the lower fiber with temperature ($T^\ell = 100°\text{F}$), as shown in Fig.3-33*c*.

Likewise the displacement function is obtained for the cantilever beam using Eq. (3-48*c*).

$$v^t = -0.47 \times 10^{-4} x^2 \tag{3-49c}$$

Differentiation of the displacement function yields the slope.

$$\theta^t = -0.94 \times 10^{-4} x$$

Maximum displacement occurs at the free end ($v^t{}_{\max} = -1.88\,\text{in.}$). The slope at ($x = 0$) is ($\theta_0 = 0$), and at the free end ($x = 200\,\text{in.}$) it is ($\theta_{200} = -18.86 \times 10^{-3}\,\text{rad}$). The cantilever bends downwards as shown in Fig. 3-34. The response of the cantilever is opposite to that of the simply supported beam, but for both beams the top fibers elongate while the bottom fibers contract.

3.7 Settling of Supports

A simply supported beam is obtained by restraining its movement along the y-coordinate direction at the boundary points $x = 0$ and $x = \ell$. No restraint is imposed on its boundary slope θ. The beam is free to rotate, or θ is finite at $x = 0$ and $x = \ell$. A simply supported beam can settle along the y-coordinate direction by $v(x = 0) = -\Delta_A$ and $v(x = \ell) = -\Delta_B$ as shown in Fig. 3-35*a*. A cantilever beam is obtained by restraining its movements, consisting of displacement ($v(x = 0) = 0$) and slope ($\theta(x = 0) = 0$) at the origin. No restraint is specified at its free boundary. A cantilever beam can settle by $v(x = 0) = -\Delta_A$ and rotate by $\theta(x = 0) = -\Delta\theta_A$ at its fixed support, as shown in Fig. 3-35*b*.

Because the amount of settling is small, the equilibrium equations, written in the initial undeformed configuration, remain valid even for the settled structure. The internal moment and shear forces that are determined from an application of the EE are not changed by support settling. For a determinate structure, the internal forces are zero when the beam is subjected only to support settling. No stress is induced because a determinate beam does not offer any resistance to support settling.

Support settling moves the beam as a rigid body. For a simply supported beam, the displacement function is a line joining the two settling supports at $v(x = 0) = -\Delta_A$ and $v(x = \ell) = -\Delta_B$, as shown in Fig. 3-35*a*.

$$v(x) = -\left\{\Delta A + \left(\frac{\Delta B - \Delta A}{\ell}\right)x\right\} \tag{3-50a}$$

For a cantilever beam, the settling of its fixed support by $v(x = 0) = -\Delta_A$ and its rotation by $\theta(x = 0) = -\Delta\theta_A$ is depicted in Fig. 3-35*b*. The beam displacement has two components: a uniform displacement ($-\Delta_A$) and a linear rigid-body rotation ($-\Delta\theta_A x$).

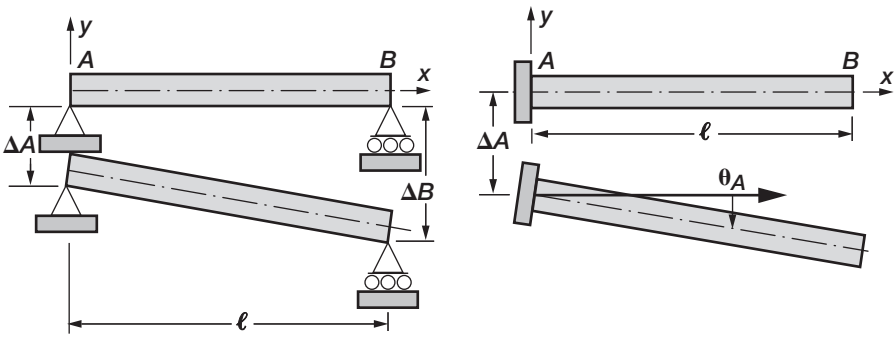

(a) Simply supported beam. (b) Cantilever beam.

FIGURE 3-35 *Settling of support in a beam.*

$$v(x) = -\{\Delta A + \Delta\theta_A x\} \tag{3-50b}$$

The displacement functions given by Eqs. (3-50*a*) and (3-50*b*) are referred to as rigid-body displacements. Their derivative with respect to the x-coordinate is a constant ($dv/dx =$ constant). No bending moment ($M = EId^2v/dx^2 = 0$) or shear force ($V = -EId^3v/dx^3 = 0$) is induced in the beam.

3.8 Shear Center

Consider a uniform cantilever beam of length ℓ, subjected to a uniformly distributed load of magnitude p per unit length and a concentrated load P, as shown in Fig. 3-36*a*. In Chapter 1, it was mentioned that the beam will flex when the line of action of the load (P or p) passes through the centroid of the cross-section. An eccentrically applied load (P or p) can induce secondary torque in a beam. There are situations associated with specific shapes of beam cross-sections that can induce torque even when the applied load has no eccentricity. The issue is illustrated by considering three different cross-section types for the beam: a rectangular section, an I-section, and a channel section, as shown in Fig. 3-36*b*.

The rectangular beam under the action of a load applied along the y-coordinate axis bends or flexes along its neutral axis, which is the x-coordinate axis. The beam will experience only flexural deformation along its length (or x-coordinate axis) when the load (P or p) passes through the centroid (G) with the y-axis as its line of action. Likewise, a beam with an I-section will experience only flexural deformation along its length when the load passes through the centroid G with the y-axis as its line of action. A uniform beam with a cross-section that is symmetrical about both the y- and z-coordinate axes will experience flexure along the x-axis when the load is applied along the y-coordinate direction passing through the centroid.

Consider next a uniform beam made of a channel section with equal flange width b. Let G be the centroid of the cross-sectional area as shown in Fig. 3-36*b*. Consider the y- and

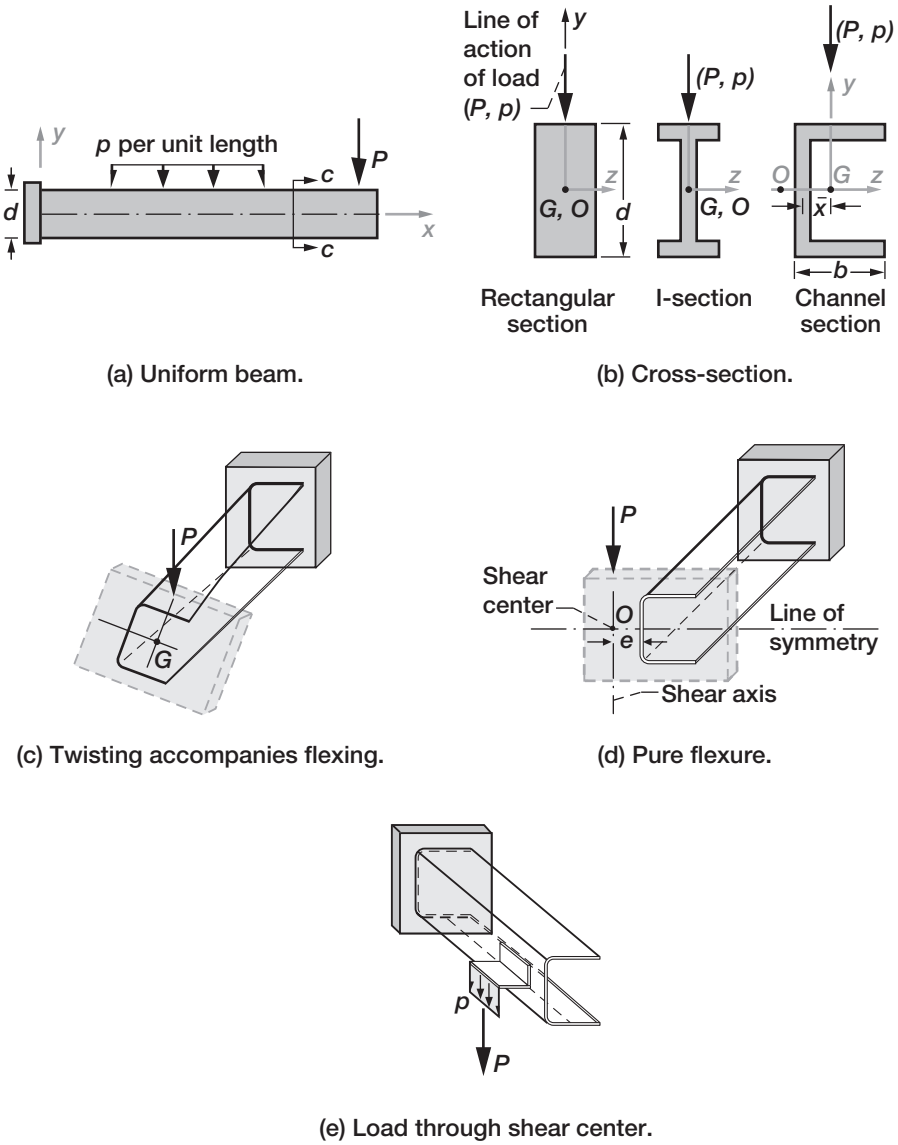

FIGURE 3-36 *Shear center for different beam shapes.*

z-coordinate axes with origin G, as marked in the figure. Apply a load (P or p) along the y-coordinate axis that passes through the centroid. This load will cause the beam to bend along the x-axis as well as twist in the y–z plane, as shown in Fig. 3-36*c*. Twisting occurred without the application of a torque load. Let us shift the line of application of the same load (P or p) to a parallel axis that passes through the shear axis at O (using an angle attachment) as shown in Fig. 3-36*d*. The beam bends, but it does not twist for this line of action of the

load. Point O is referred to as the "shear center," and its distance is e from the wall of the web. Point O lies in the line of symmetry of the channel section. The shear axis passes through point O, and line of action is parallel to the y-coordinate axis.

The shear center of a cross-section composed of thin parts like the web and flange, such as in the channel section, is important because such a cross-section provides a large resistance to bending. But it offers a small resistance to twisting, and is, thereby, prone to shear buckling. The twisting can be avoided when the line of action of load passes through the shear center. In aircraft construction, a heavy load is applied to a channel beam at the shear center through an angle attachment, as shown in Fig. 3-36*e*. Determination of the shear center is based on the concept of shear flow: its direction and magnitude.

Direction of Shear Flow

For the discussion of shear flow, the example of a uniform simply supported beam made of a thin-walled I-section shown in Fig. 3-37*a* is considered. An elemental section in an enlarged scale is shown in Fig. 3-37*b*. The bending moments (M and $M + \Delta M$) induce compression in the top flange AB and tension in the bottom flange CD. Forces in an elemental length at B are marked in Fig. 3-37*c*. The moments (M and $M + \Delta M$) induce internal forces (F and $F + \Delta F$), and the balancing force is ΔF. The elemental force ($\Delta F = q\Delta x$) is equal to the product of the shear flow (q) and the elemental length (Δx). In other words, the shear flow is the rate of change of ΔF as $q = \Delta F/\Delta x$ and, in the limiting case, $q = dF/dx$. The shear flow follows the shear stress notation, and it is marked in Fig. 3-37*c*. Shear flow along the x-coordinate is balanced among adjacent faces of the element. At location B, the shear flow along the z-direction is from B toward A. A similar analysis is performed using the forces marked in Fig. 3-37*d* to obtain the direction of shear flow at location A along the z-coordinate direction, which is from A to B. Likewise at the bottom flange (which is in tension), the shear flow directions are marked at locations C and D, in Fig. 3-37*b*. The shear flow in the web follows the direction of the shear force (V), which is along the negative y-coordinate direction, as shown in Fig. 3-37*e*.

Magnitude of Shear Flow

The magnitude of shear flow is calculated by considering the example of a symmetrical I-section with depth (d), flange width (b), and thickness (t), as shown in Fig. 3-38*a*. The shear flow (q) (which is the rate of change of force) is also equal to the product of shear stress ($\tau = VQ/It$) and thickness (t), as ($q = \tau t = VQ/I$). Its calculation requires two geometrical properties of the section about the neutral axis: the moment of inertia (I) and the moment of area (Q). The moment of inertia of the I-section about the neutral axis ($n-a$) shown in Fig. 3-38*a* is calculated by adding the flange and web contributions as

$$I = \frac{bt^3}{6} + \frac{btd^2}{2} + \frac{td^3}{12} \tag{3-51a}$$

The higher power of the thickness (t^3) is neglected because t is assumed to be small compared with the depth (d) and flange width (b). The moment of inertia formula simplifies to

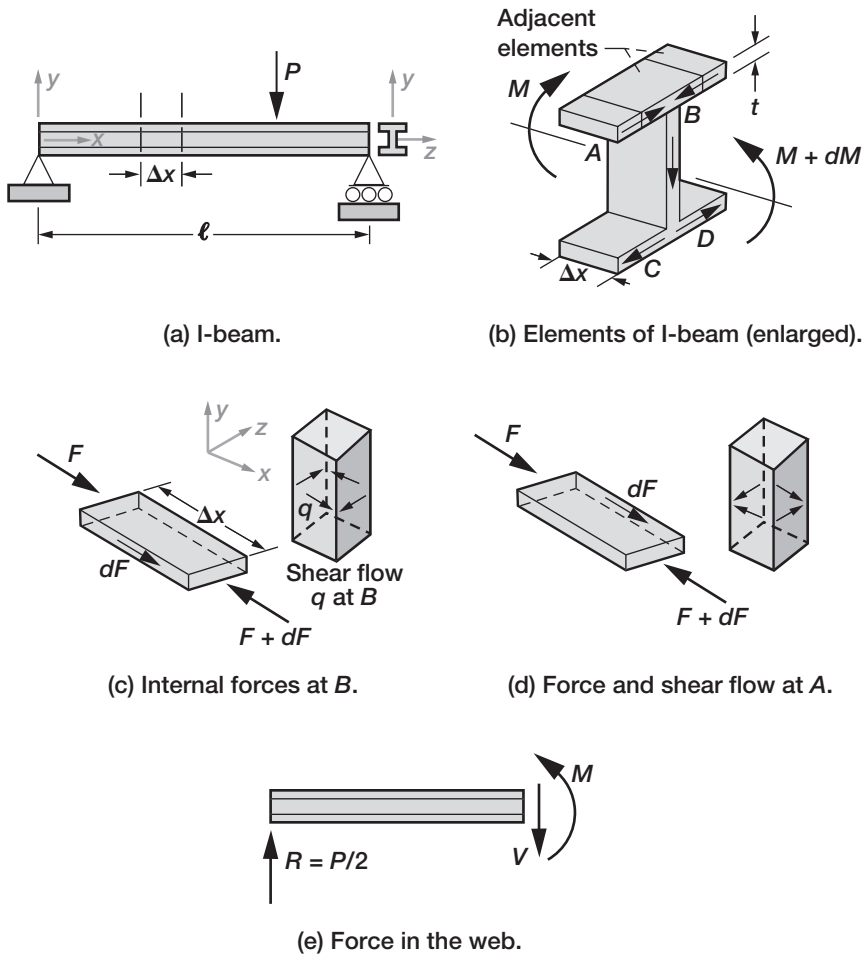

(a) I-beam.

(b) Elements of I-beam (enlarged).

(c) Internal forces at *B*.

(d) Force and shear flow at *A*.

(e) Force in the web.

FIGURE 3-37 *Shear flow in an I-beam.*

$$I \simeq \frac{td^2}{2}\left(b + \frac{d}{6}\right) \tag{3-51b}$$

The moment of the area about the neutral axis depends on the location of the area in the cross-section. The moment of area $Q^f(z)$ for an elemental area ($dA = t\ dz$) in the flange located along the positive z-axis is defined as

$$Q^f(z) = \int_z^{b/2} \frac{d}{2} dA = \frac{dt}{2}\int_z^{b/2} dz = \frac{dt}{2}(b/2 - z) \tag{3-52}$$

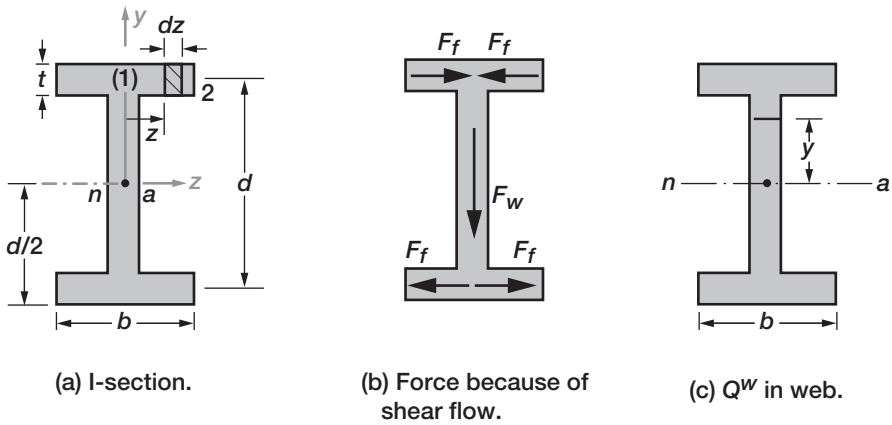

FIGURE 3-38 *Magnitude of shear flow.*

The moment of area at $z = b/2$, or location 2 in Fig. 3-38*b*, is zero ($Q^f(z = b/2) = 0$). At location 1, $z = 0$ or it is maximum ($Q^f(z = 0) = bdt/4$). It has a linear variation between locations 2 and 1. The shear flow at locations 1 and 2 are as follows:

$$q = \frac{VQ}{I} = \frac{Vdt(b/2 - z)}{td^2(b + d/6)} = \frac{V(b/2 - z)}{d(b + d/6)}$$

$$q_2 = 0 \quad \text{at} \quad z = b/2 \tag{3-53a}$$

$$q_1 = \frac{Vb}{2d(b + d/6)} \quad \text{at} \quad z = 0$$

The average shear flow is obtained as

$$q_a = \frac{q_1 + q_2}{2} = \frac{Vb}{4d(b + d/6)} \tag{3-53b}$$

The force in the top flange F_f, along the positive z-coordinate axis is obtained as the product ($F_f = q_a b/2$).

$$F_f = \frac{b}{2} q_a = \frac{Vb^2}{8d(b + d/6)} = \frac{Vtdb^2}{16I} \tag{3-53c}$$

The forces are marked in other flange segments in Fig. 3-38*b*. The magnitude of the force F_f, is given by Eq. (3-53*c*) and the directions are shown in Fig. 3-38*b*.

For the web, the moment of area $Q^w(y)$ at the location y shown in Fig. 3-38c is calculated as the sum of contributions from the flange ($btd/2$) and the part of the web of height ($d/2 - y$). Thickness, being small, is neglected to obtain $d/2 - t = d/2$.

$$Q^w(y) = \frac{btd}{2} + t\int_y^{d/2} ydy$$

$$Q^w(y) = \frac{btd}{2} + \frac{t}{2}\left(y^2\right)\Big|_y^{d/2}$$

$$Q^w(y) = \frac{btd}{2} + \frac{t}{2}\left[\left(\frac{d^2}{4} - y^2\right)\right]$$

$$Q^w(y) = \frac{btd}{2} + \frac{td^2}{8} - \frac{ty^2}{2} \tag{3-54a}$$

The moment of the area $Q^w(y)$, being a quadratic function in y, is not changed for positive y or negative y coordinate. The shear flow in the web (q_w) is obtained as

$$q_w = \frac{VQ^w}{I} = \frac{Vt}{2I}\left(bd + \frac{d^2}{4} - y^2\right) \tag{3-54b}$$

The shear flow in the web q_w has a parabolic variation along the y-coordinate. The force in the web (F_w) is obtained by integrating the shear flow (q_w) over the depth as

$$F_w = \int q_w dy = \frac{Vt}{2I}\int_{-d/2}^{d/2}\left(bd + \frac{d^2}{4} - y^2\right)dy$$

$$= \frac{Vt}{2I}\left(bdy + \frac{d^2y}{4} - \frac{y^3}{3}\right)\Big|_{-d/2}^{+d/2}$$

$$= \frac{Vtd^2}{4I}(2b + d/3) \tag{3-54c}$$

Because $I = \frac{td^2}{4}(2b + \frac{d}{3})$, the force ($F_w$) is equal to the shear force (V).

$$F_w = V \tag{3-54d}$$

The web force (F_w) and shear force (V) relation ($F_w = V$) could have been obtained from the equilibrium along the y-coordinate direction. This relation assumes that the thickness of flange is thin and that the web carries the shear force.

EXAMPLE 3-15

A simply supported I-beam is subjected to a $P = 100\,\text{kN}$ load at the center span as shown in Fig. 3-39a. The beam is 10 m long. The dimensions of the I-section are marked in Fig. 3-39b. Calculate the shear stress distribution, and locate the shear center at one-quarter span of the beam.

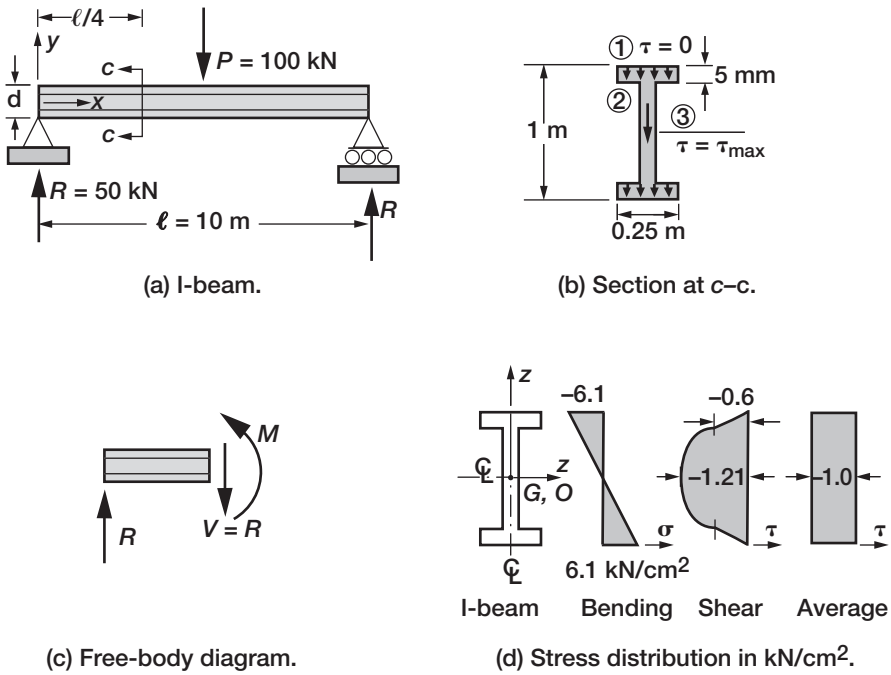

FIGURE 3-39 *Stress distribution in an I-beam.*

Solution

The shear force at the one-quarter span is obtained as $V = -0.5P = -50\,\text{kN}$ from the free-body diagram shown in Fig. 3-39*c*. The shear force (V) is negative, whereas the moment ($M = P\ell/8$) is positive (the t-sign convention is followed). The shear stress has a symmetrical distribution about the neutral axis, and it peaks at the neutral axis ($\tau_{\max}$), with its zero value at the top surface of the flange ($\tau = 0$). The shear stress is calculated at three locations: (1) the top of the flange, (2) the bottom of the flange, and (3) the neutral axis.

At Location 1 (top of flange) (y = d/2 = 50 cm)

The moment of area $Q_1 = A_1 d/2 = 0$ because $A_1 = 0$. The shear stress is ($\tau_1 = VQ_1/It = 0$). The top flange surface is shear stress-free.

At Location 2 (bottom of flange) (y = (d/2) − (t/2) = 50 − 0.25 = 49.75 cm)

The moment of the top flange area $Q_2 = A_2 y = 25 \times 0.5 \times 49.75 = 621.88\,\text{cm}^3$. Engineers may neglect the flange thickness in calculating distance y and set ($y = 50$) to obtain

$$Q_2 = A_2 d/2 = 25 \times 0.5 \times 50 = 625.0\,\text{cm}^3$$

The moment of inertia of the I-section is obtained as the difference between the two rectangular cross-sections.

$$I = (1/12)(25 \times 100^3 - 24.5 \times 99^3) = 102.3 \times 10^3\,\text{cm}^4$$

The shear stress is

$$\tau_2 = VQ_2/It = (-50 \times 621.88)/(102.3 \times 10^3 \times 0.5) = -0.608\,\text{kN/cm}^2$$

At Location 3 (neutral axis) (y = 0)

The moment of area (Q_3) above the neutral axis is obtained by adding the flange and the web contributions as

$$\begin{aligned} Q_3 &= (A_{\text{flange}} \times (d - t)/2 + A_{\text{web}} \times (d/2 - t)/2 \\ &= (25 \times 0.5 \times (50.0 - 0.25) + 0.5 \times 0.5 \times (50 - 0.5)^2 \\ &= 1234.4\,\text{cm}^3 \end{aligned}$$

The shear stress is

$$\tau_2 = VQ_3/It = (-50 \times 1234.4)/(102.3 \times 10^3 \times 0.5) = -1.21\,\text{kN/cm}^2$$

The average shear stress in the web ($\tau_a = V/\text{web area}$) is

$$\tau_a = -50/[0.5 \times (100 - 1)] = -1.0\,\text{kN/cm}^2$$

The compressive bending stress at the top flange surface ($y = d/2$) at location $x = \ell/4$ is

$$\sigma_{\ell/4} = (My/I) = (Pd\ell/16I) = -6.1\,\text{kN/cm}^2$$

The shear stress and the bending stress at the one-quarter span location are graphed in Fig. 3-39*d*. The shear stress peaks at the neutral axis at $\tau_{\max} = -1.21\,\text{kN/cm}^2$. It has a parabolic variation along the depth, and it attains $\tau_2 = 0.61\,\text{kN/cm}^2$ at the bottom flange surface and reduces to zero at the top flange surface, as shown in Fig. 3-39*d*. The average stress calculated from the simple formula $\tau_a = V/A = -1.0\,\text{kN/cm}^2$ is close to its peak value. The bending stress at the one-quarter span location is about five times the shear stress, and it occurs at the top flange location, where the shear stress is zero.

The centroid (G) and shear center (O) coincide because the beam is symmetrical about the y- and z-axes as marked in Fig. 3-39*d*.

EXAMPLE 3-16

Develop an analytical expression for the shear center of a symmetrical channel section with dimensions as marked in Fig. 3-40*a*.

The moment of inertia (I) of the channel section about the neutral axis is

$$I = \frac{btd^2}{2} + \frac{1}{12}td^3 \tag{3-55}$$

The moment of the flange area (Q_f) as a function of z about the neutral axis is

$$Q_f(z) = \frac{dt}{2}(b - z) \tag{3-56}$$

The moment of the area of the channel web at a location y, about the neutral axis, is (see Eq. (3-54*a*))

$$Q_w(y) = \frac{t}{2}\left(bd + \frac{d^2}{4} - y^2\right) \tag{3-57}$$

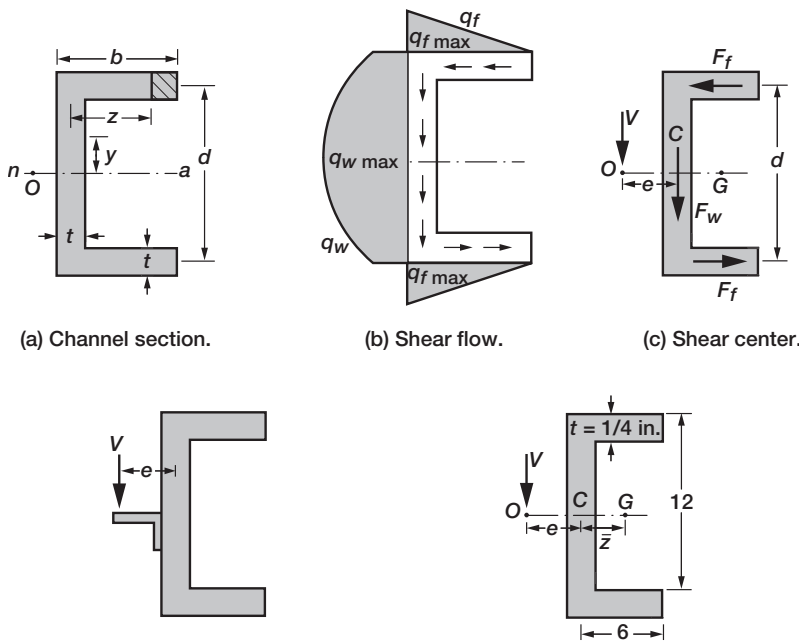

(a) Channel section. (b) Shear flow. (c) Shear center.

(d) Load through an attachment. (e) Shear center and centroid.

FIGURE 3-40 *Shear center for a channel section.*

The shear flow (q_f) and force (F_f) in the flange are

$$q_f(z) = \frac{VQ_f}{I} = \frac{V}{I}\frac{dt}{2}(b - z)$$
$$q_{f_{\max}} = \frac{V}{2I}bdt = \frac{Vb}{d(b + d/6)} \tag{3-58}$$

$$F_f = \int_o^b q_f dz = \frac{Vdt}{2I}\int_o^b (b - z)dz = \frac{Vtd}{2I}\left(bz - \frac{z^2}{2}\right)\Bigg|_o^b$$
$$F_f = \frac{Vtd}{4I}b^2 = \frac{Vtb^2}{2(btd + td^2/6)}$$
$$F_f = \frac{Vb^2}{2(db + d^2/6)} = \frac{3Vb^2}{d(6b + d)} \tag{3-59}$$

The variation of shear flow in the flange is shown in Fig. 3-40*b*. It has a linear variation and attains the maximum value $[q_{f\,\max} = Vb/\{d(b + d/6)\}]$ at $z = 0$.

The shear flow (q_w) in the web is

$$q_w = \frac{Vt}{2I}\left(bd + \frac{d^2}{4} - y^2\right)$$
$$q_{w_{\max}} = \frac{Vtd}{2I}(b + d/4)$$
$$F_w = \int_{-d/2}^{+d/2} q_w dy = V \tag{3-60}$$

The shear flow distribution in the web is shown in Fig. 3-40*b*. It has a parabolic distribution along the web depth about the neutral axis. It attains the maximum value ($q_{f\,\max} = [(Vtd/2I)(b + d/4)]$ at the neutral axis.

The forces in the flange and web are marked in Fig. 3-40*c*. The flange and web forces (F_f and F_w) do not equilibrate when the load (V) is applied at the centroid G. The nonequilibrating forces are equivalent to a torque load that twists the section. The twisting can be alleviated provided the load (V) is applied along the neutral axis at O with eccentricity e. The location 0 is referred to as the shear center. The shear center is determined from an equilibrium of the forces acting in the channel section, as shown in Fig. 3-40*c*.

$$M_0 = F_f d - F_w e = 0$$
$$e = \frac{F_f d}{F_w}$$
$$= d\frac{(db^2 t)}{4I} \times \frac{I}{t\left(\frac{d^3}{12} + \frac{bd^2}{2}\right)}$$

$$e = \frac{3b^2}{(d + 6b)} \tag{3-61}$$

The derivation of Eq. (3-61) uses both flange and web forces (F_f and F_w). The same expression can be derived without using the web force when equilibrium is taken about the web center C, as shown in Fig. 3-40c.

$$M_c = 0 = F_f d - Ve$$

$$e = \frac{F_f d}{V} = \frac{3b^2}{(d + 6b)} \tag{3-62}$$

The distance of the shear center (e) depends on the depth (d) and width (b), but it is independent of the thickness (t), which is considered to be uniform for the entire section. If, however, the flange and web have different thicknesses (t_f and t_w), respectively, the formula will include the thickness ratio $k = t_w/t_f$ as

$$e = \frac{3b^2}{6b + d\left(t_f/t_w\right)} = \frac{3b^2}{6b + kd} \tag{3-63}$$

The load at the shear center can be applied through an angle attachment as shown in Fig. 3-40d.

For a channel with depth $d = 12$ in., width $b = 6$ in., and thickness $t = 0.25$ in., as shown in Fig. 3-40e, the shear center is calculated as

$$e = \frac{3 \times 6^2}{12 + 6 \times 6} = \frac{9}{4} = 2.25 \text{ in.} \tag{3-64}$$

The centroid of the channel section can be obtained as the ratio of the moment of area ΣAz to area A as

$$\bar{z} = \frac{\Sigma Az}{\Sigma A}$$

The cross-sectional area of the channel section is

$$A = \Sigma A = 2bt + dt$$

The moment of area about the web center is

$$\Sigma Az = 2tb\frac{b}{2} = tb^2$$

The centroidal distance from the web center is

$$\bar{z} = \frac{b^2}{2b + d} \tag{3-65}$$

The distance to the centroid (G) from the web center is

$$\bar{z} = \frac{6^2}{12 + 12} = 1.5\,\text{in} \tag{3-66}$$

The distance to the shear center from the web center is 2.25 in.

The shear center and the centroid are on opposite sides of the web, and the distance between them is $e + \bar{z} = 3.75\,\text{in}$. The channel section will experience a torque ($T = 3.75\,V$) when the load is applied at the centroid. The section will be free from torque when the load is applied at the shear center through an attachment, as shown in Fig. 3-40*d*.

We provide a definition for the **shear center** for a beam cross-sectional area with symmetry about the neutral axis. The shear center is the point on the cross-sectional area of a beam through which the resultant of the transverse load must be applied, so that the beam undergoes bending and stress can be determined from the flexure formula.

EXAMPLE 3-17

Determine the shear center for the angle section shown in Fig. 3-41. The angle section is symmetrical about the z-coordinate axis, which is also the neutral axis. It has equal legs of length (b) and thickness (t). It is subjected to a shear load (V).

Solution

The moment of inertia (I) about the neutral axis is given by the formula

$$I = \frac{b^3 t}{3} \tag{3-67}$$

The moment of area of a segment r, as marked in Fig. 3-41, is

$$Q(r) = rt(b - r/2)/\sqrt{2} \tag{3-68}$$

The shear stress in segment r is

$$\tau(r) = \frac{VQ}{It} = \frac{3rV}{\sqrt{2}b^3 t}\left(b - \frac{r}{2}\right)$$

Shear stress peaks at $r = b$, which is the intersection of the angle legs.

$$\tau_{\max} = \frac{3V}{2\sqrt{2}bt} = 2.12\frac{V}{2bt} \tag{3-69}$$

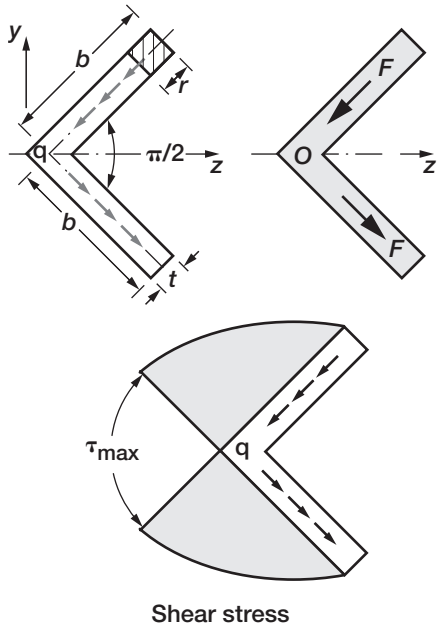

FIGURE 3-41 *Shear center for an angle section.*

$$\tau_{av} = \frac{V}{A} = \frac{V}{2bt}$$

The shear stress has a quadratic variation. It is zero at the boundary ($r = 0$) and attains the maximum value at $r = b$ ($\tau_{\max} = 1.5\, V/bt\sqrt{2}$), as depicted in Fig. 3-41. It is about twice the average shear stress ($\tau_a = V/2bt$). The shear flow is the product of the stress and the thickness ($q = \tau t$).

The internal force (F_1) in the top leg is obtained as

$$F_1 = \int_0^b q dr = \int_0^b \tau t dr = \frac{3V}{\sqrt{2}b^3}\int_o^b \left(br - \frac{r^2}{2}\right) dr$$

$$F_1 = \frac{V}{\sqrt{2}}$$

$$F_2 = F_1 \tag{3-70}$$

The force (F_2) in the bottom leg is equal to that in the top leg because of symmetry. The two forces in the legs intersect at O, which is the shear center. The shear force (V) is equal to the resultant of the forces in the legs. For an angle section, the intersection of the two legs locates the shear center O.

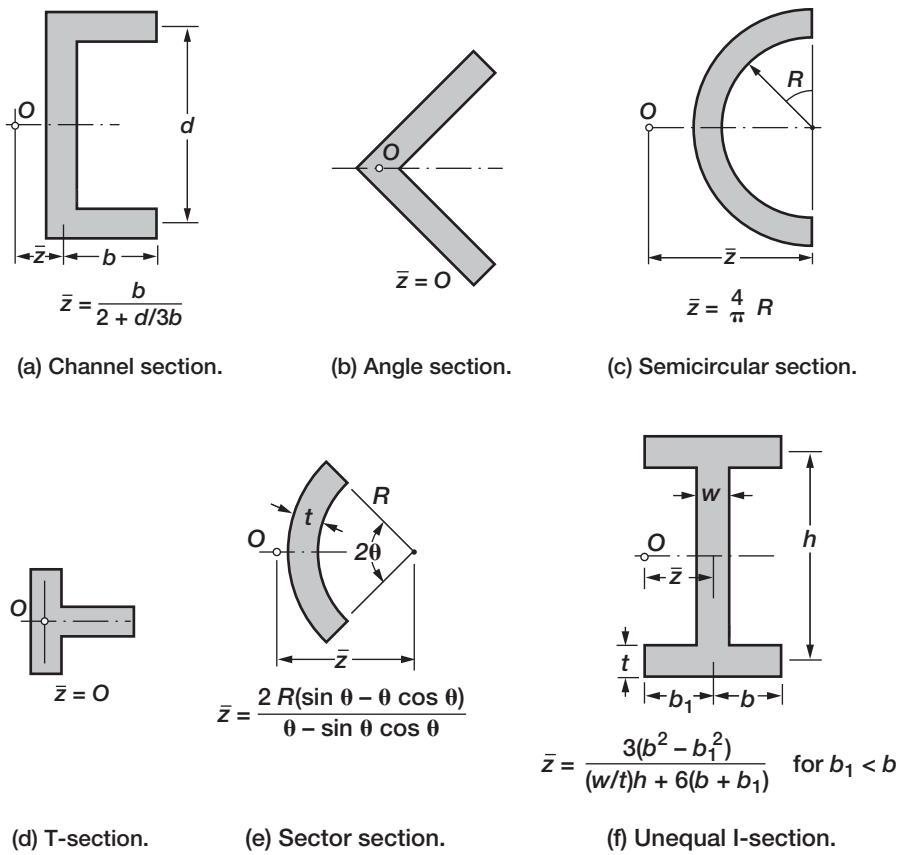

FIGURE 3-42 *Shear centers for different cross-sections.*

The position of the shear centers for six typical cross-sections—a channel section with uniform thickness, an equal leg angle section with uniform thickness, a semicircular section with uniform thickness, a T-section with uniform thickness, a sector, and an unequal I-section—are given in Fig. 3-42. The distance (z) to the shear center O, is measured from a reference location. For the channel section (and also for an I-section) it is measured from the web center. For semicircular and sector sections it is measured from the center of the circle.

3.9 Built-up Beam and Interface Shear Force

A built-up beam, which is assembled from separate components, is quite often used in engineering practice. In such a beam, an interface is created when two component parts are joined together by nailing, bonding, welding, or other means. The beam acts as a single unit

provided the interface does not fail. Such a failure can be prevented by designing the fastening to withstand the induced shear force at the interface. Excessive shear force can promote failure at an interface. The shear stress and shear force formula are used to calculate interface shear force; this is illustrated through examples.

EXAMPLE 3-18

The box beam shown in Fig. 3-43*a* is assembled from four wooden planks, consisting of two flange planks and two web planks. The planks are fastened together by screws. The dimensions of the beam and the spacing of the screws are marked in the figure. Calculate the capacity and spacing of the screws (s), shown in Fig. 3-43*b*, for the beam to carry a shear load (V).

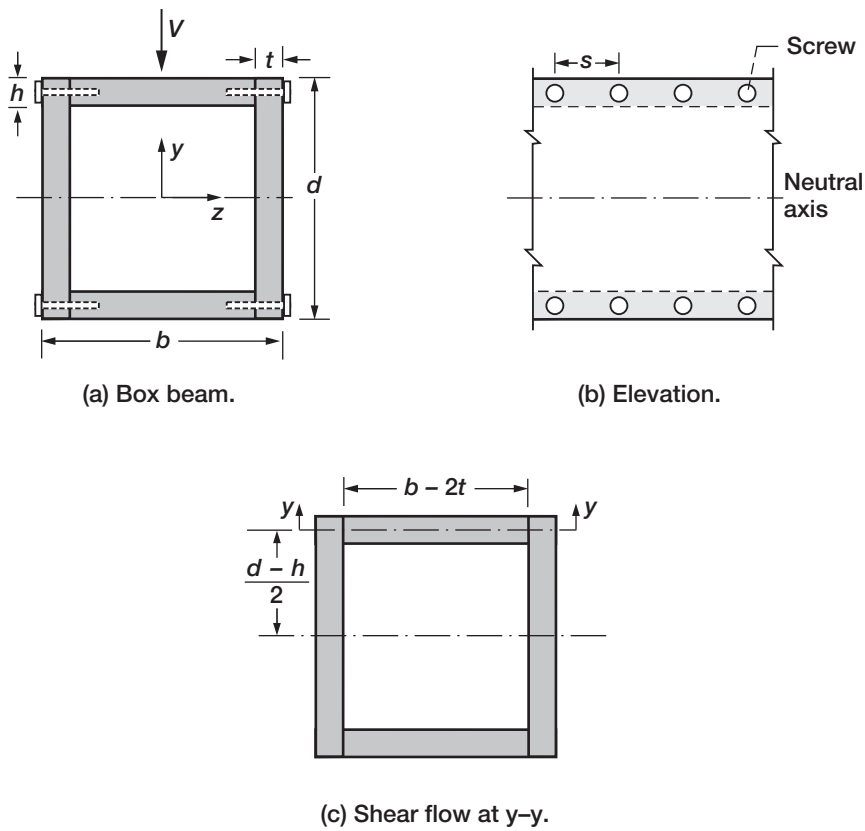

FIGURE 3-43 *Analysis of a boxed beam.*

Solution

The moment of inertia of the box beam about the neutral axis is obtained as the difference between the outer and inner rectangular areas as

$$I = \frac{1}{12}\left[bd^3 - (b-2t)(d-2h)^3\right] \tag{3-71}$$

The shear flow is transmitted from the upper (and lower) flange planks to the two web planks. The screws must resist this shear flow. The shear flow at the location of the screws marked "y–y" in Fig. 3-43c is obtained from the formula $q_y = VQ_y/I$. The moment of area (Q_y) is calculated for the plank cross-section shown in Fig. 3-43c as

$$Q_y = \bar{y}A = \left(\frac{d-h}{2}\right)(b-2t)h \tag{3-72}$$

The shear flow at the screw is

$$q_y = \frac{VQ_y}{I} = \frac{6V(d-h)(b-2t)h}{bd^3 - (b-2t)(d-2h)^3} \tag{3-73}$$

The shear flow (q_y) must be resisted by the two rows of screws. Let us assume the capacity or the resistance offered by one screw in shear to be R_s. We assume the spacing of the screws to be uniform at the s unit apart. The capacity per unit length for a screw pair (since the flange is fastened to the web by two rows of screws) is $q_s = 2R_s/s$. The fastener will not fail provided the resistance (q_s) exceeds or equals the shear flow (q_y).

$$2\frac{R_s}{s} = q_y$$

$$s = \frac{2R_s}{q_y} \tag{3-74}$$

The numerical value for spacing is calculated for the following parameters: $d = 12\,\text{in.}$, $b = 10\,\text{in.}$, $t = 0.5\,\text{in.}$, $h = 1.5\,\text{in.}$, $V = 2.5\,\text{kip}$, and $R_s = 250\,\text{lbf}$.

$$\begin{aligned}
I &= \frac{1}{12}\left[10 \times 12^3 - (10-1)(12-3)^3\right] = 893.25\,\text{in.}^4 \\
Q_y &= \frac{(12-1.5)}{2}(10-1)1.5 = 70.88\,\text{in.}^3 \\
q_y &= \frac{VQ_y}{I} = 2500 \times \frac{70.88}{893.25} = 198.38\,\text{lbf/in.} \\
s &= \frac{2 \times 250}{198.38} = 2.52\,\text{in.}
\end{aligned} \tag{3-75}$$

The spacing of the screws should be at least $s = 2.54$ in. It can be rounded to a lower spacing at 2.5 in.

EXAMPLE 3-19

The T-beam shown in Fig. 3-44*a* is assembled of two wooden planks. The planks are fastened together by screws. The dimensions of the beam are marked in the figure. Calculate the spacing of the screws for the following parameters: $d = 500$ mm, $b = 250$ mm, $t = 50$ mm, $V = 10$ kN, and the resistance of the screw at $R_s = 1$ kN.

Solution

The shear flow formula requires the moment of inertia about the neutral axis, which is obtained by equating the moment of area taken about the top fiber of the flange.

$$\frac{btt}{2} + \frac{t(d^2 - t^2)}{2} = y_c\{bt + t(d - t)\}$$

$$y_c = \frac{bt^2 + t(d^2 - t^2)}{2(bt + td - t^2)}$$

$$y_c = \frac{250 \times 50^2 + 50(500^2 - 50^2)}{2(250 \times 50 + 50 \times 500 - 50^2)}$$

$$y_c = \frac{13.0 \times 10^6}{70 \times 10^3} = 185.7 \text{ mm} \tag{3-76}$$

The neutral axis is biased toward the top fiber ($y_c = 185.7$ mm) because of the flange area. The dimensions of the T-section in millimeter are marked in Fig. 3-44*b*. The moment of inertia (I) and the moment of flange area (Q_f) about the neutral axis are as follows:

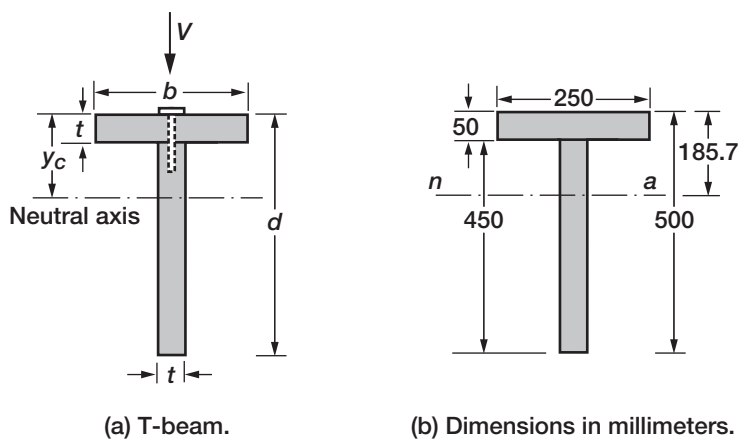

(a) T-beam. (b) Dimensions in millimeters.

FIGURE 3-44 *Built-up T-beam.*

$$
\begin{aligned}
I &= \frac{1}{12}250 \times 50^3 + 250 \times 50 \times (185.7 - 25)^2 \\
&\quad + \frac{1}{12} \times 50(500 - 50)^3 + 50 \times 450 \times (275 - 185.7)^2 \\
I &= 885.33 \times 10^6\,\text{mm}^4 \\
Q_f &= 50 \times 250 \times (185.7 - 25) \\
Q_f &= 2.01 \times 10^6\,\text{mm}^3
\end{aligned} \tag{3-77}
$$

The shear flow in the flange is obtained as

$$
q = \frac{VQ_f}{I} = 10^4 \times \frac{2.01}{885.33} = 22.70\,\text{N/mm} \tag{3-78}
$$

The spacing of the screws is obtained as the ratio of the resistance (R_s) to the shear flow as

$$
S = \frac{R_s}{q} = \frac{1000}{22.70} = 44.05\,\text{mm} \tag{3-79}
$$

The spacing of the screws must not exceed 44.05 mm. It may be rounded to $s = 40\,\text{mm}$.

Remarks on Shear Flow

We have provided an elementary treatment for shear stress and shear flow in thin-walled cross-sections. The subject is further discussed in advanced strength of materials and elasticity. Our calculation is based on the shear stress formula ($\tau = VQ/It$) and the shear flow formula ($q = VQ/I$). Internal force analysis provides the shear force (V). The parameters t, Q, and I are geometrical properties of the cross-section, and only the section with one axis of symmetry is considered. The moment of inertia (I) is calculated about the neutral axis. The moment of area (Q) is calculated about the neutral axis, but its value depends on the location of the area.

The shear flows in four typical cross-sections are depicted in Fig. 3-45. The shear center is designated by the letter (O) and centroid by (G). Shear flow is along the thin walls of a cross-section. In the web the shear flow is vertical (along the negative y-axis), which is the direction of the shear force (V). In the flange, the shear flow is horizontal (or along the x-axis). The shear flow has a quadratic variation in the web, and it attains the maximum value at the neutral axis where the normal stress due to flexure is zero. In the flange, the shear flow is linear and it is zero at a free surface. For an angle section, the shear flow has a quadratic distribution along the legs and peaks at the neutral axis.

For a section with two axes of symmetry, the torque induced from the shear flow equilibrates. A beam made of such a cross-section will flex without twisting when the line

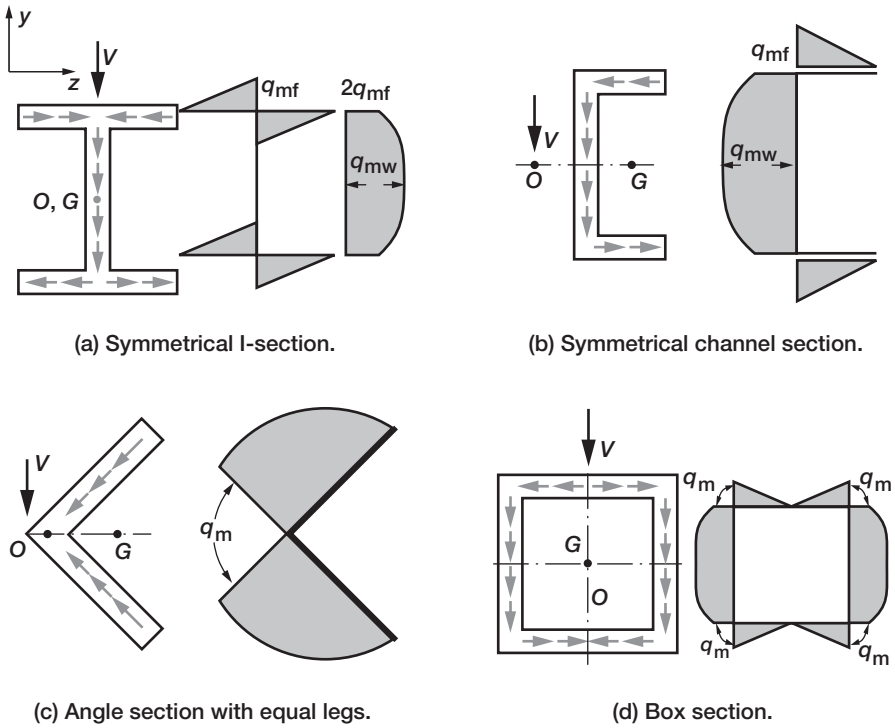

FIGURE 3-45 *Shear flow in a typical cross-section.*

of action of the load passes through the centroid of the cross-section. For such sections, the shear center (O) coincides with the centroid (G). When a transverse shear load (V) is applied to a cross-section with one axis of symmetry, it will bend as well as twist. The twist can be avoided when the load is applied at the shear center, which lies along the axis of symmetry. Its location is calculated by setting the torque due to shear flow and shear force to zero.

For a symmetrical angle and T-section, the shear center lies at the intersection of the legs, which need not be at the centroid of the section. The shear center is a property of the cross-section, and it is independent of the applied loads.

The shear flow formula is used to estimate the interface shear force in segments of a built-up cross-section. The spacing of a fastener with known resistance can be calculated by equating the shear force to the strength of the fastener.

3.10 Composite Beams

The normal stress (σ) in a beam due to a moment (M) has a linear variation with zero stress ($\sigma_{na} = 0$) at the neutral axis and maximum stress at the top and bottom fibers ($\sigma_{\max}$), as shown in Fig. 3-46*a*. For a rectangular cross-section, shown in Fig. 3-46*b*, the material at the outer fiber is subjected to a peak stress and the cross-section must be designed for this

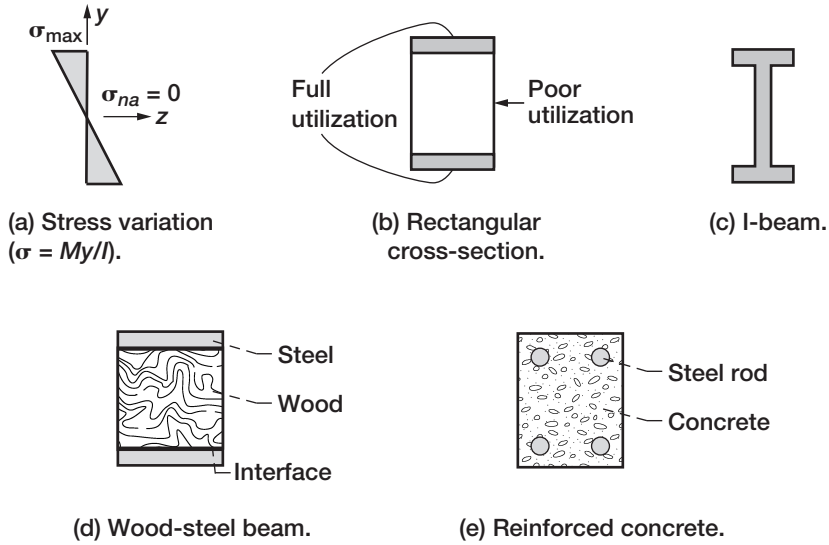

(a) Stress variation ($\sigma = My/I$).

(b) Rectangular cross-section.

(c) I-beam.

(d) Wood-steel beam.

(e) Reinforced concrete.

FIGURE 3-46 *Composite beams.*

condition to avoid failure. The material can be utilized to its capacity at the top and bottom fiber locations. The material cannot be used to its full strength capacity around the neutral axis because of the low stress level. This design can become inefficient and heavy. Engineers can improve the design by using different cross-sections, as depicted in Figs. 3-46*c* to 3-46*e*. A single material I-section shown in Fig. 3-46*c* is quite efficient because its flange area is subjected to high stress. Its web is proportioned thin, thereby only a small amount of web material is not efficiently utilized.

The same purpose can be achieved by building a beam of two (or more) materials. A strong material is used at the outer fiber, and a weak material is placed around the neutral axis. A wooden beam with steel plates, as shown in Fig. 3-46*d*, is such an example. Concrete can be used in a beam design by reinforcing it with steel rods as shown in Fig. 3-46*e*.

Consider a beam made of a strong material (m_1 with Young's modulus E_1) at the outer fiber and a weak material (m_2 and E_2) elsewhere, as shown in Fig. 3-47*a*. Let the beam deform, inducing strain due to moment M. It is assumed that the beam is adequately designed

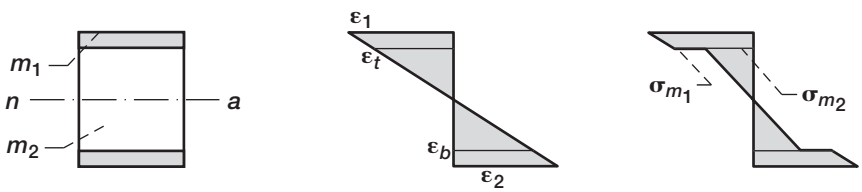

(a) Composite beam.

(b) Strain variation.

(c) Stress variation.

FIGURE 3-47 *Strain and stress variations in a composite beam.*

to act as a single integral unit throughout its use without any gap or debonding at the two material interfaces. The concept of equality of strain developed in Chapter 2 for the analysis of the composite bar is extended to analyze the composite beam.

Interface failure (or delamination) is avoided when the induced strain at any location at the interface is the same in both materials. The variation of the flexural strain across the depth is shown in Fig. 3-47*b*. It has a linear variation with no discontinuity. At the top interface, strain (ε_t) is the same for both m_1 and m_2 materials, as shown in Fig. 3-47*b*. Likewise, the strain is ε_b in both materials at the bottom interface. The strain variation is linear across the beam depth for both the composite beam and the single material elastic beam. The stress (σ), which is a product of the strain (ε) and the modulus (E), changes depending on its value for m_1 and m_2 materials.

The stress variation is not linear across the beam depth. Its variation is linear within a material, but it jumps at the interface, as shown in Fig. 3-47*c*. The two stresses at the top interface are $\sigma_{m1} = \varepsilon_t E_{m1}$ and $\sigma_{m2} = \varepsilon_t E_{m2}$. Consider, for example, that material 1 is steel with modulus $E_{m1} = 200\,\text{GPa}$ and material 2 is aluminum with modulus $E_{m2} = 70\,\text{GPa}$. Assume that there is an interface strain of one-tenth of a percent ($\varepsilon_b = 0.001$). At the interface, the stresses are $\sigma_{m1=\text{steel}} = 0.001 \times 200 = 200\,\text{Mpa}$, and $\sigma_{m2=\text{aluminum}} = 0.001 \times 70 = 70\,\text{MPa}$. There is a stress jump at the interface from 200 MPa (for steel) to 70 MPa (for aluminum), but the strain is the same ($\varepsilon_{bm1=\text{steel}} = \varepsilon_{bm2=\text{aluminum}} = 0.001$). The strain equality principle is used to calculate an equivalent section, and the flexure formula can be used to calculate the stress in a composite beam. The procedure is illustrated through two examples.

EXAMPLE 3-20

A composite beam with the dimensions shown in Fig. 3-48*a* is made of wood with steel plates strapped to the top and bottom faces. It is subjected to a moment of 100 in.-k. Determine the stress variation over the cross-section. For Young's modulus, use $E_s = 30{,}000\,\text{ksi}$ and $E_w = 2000\,\text{ksi}$ for steel and wood, respectively.

Solution

The solution of the problem is illustrated through a steel model and a wood model.

Steel Model: The ratio (n) of the two moduli is

$$n = \frac{E_w}{E_s} = \frac{2000}{30{,}000} = \frac{1}{15} \tag{3-80}$$

The wood section is converted into an equivalent steel section. Such a section has the same depth (11.5 in.), but its original width at 8 in. is reduced by the ratio n ($8/n = 0.53$ in.). Strain equality is the basis of the transformation ($\varepsilon = \sigma^w/E_w = \sigma^s/E_s$). The steel model is shown in Fig. 3-48*b*. It is like an I-beam that can utilize the material to its full capacity. The flexural formula is used to calculate stress ($\sigma = My/I$); here the sign is not important and neglected.

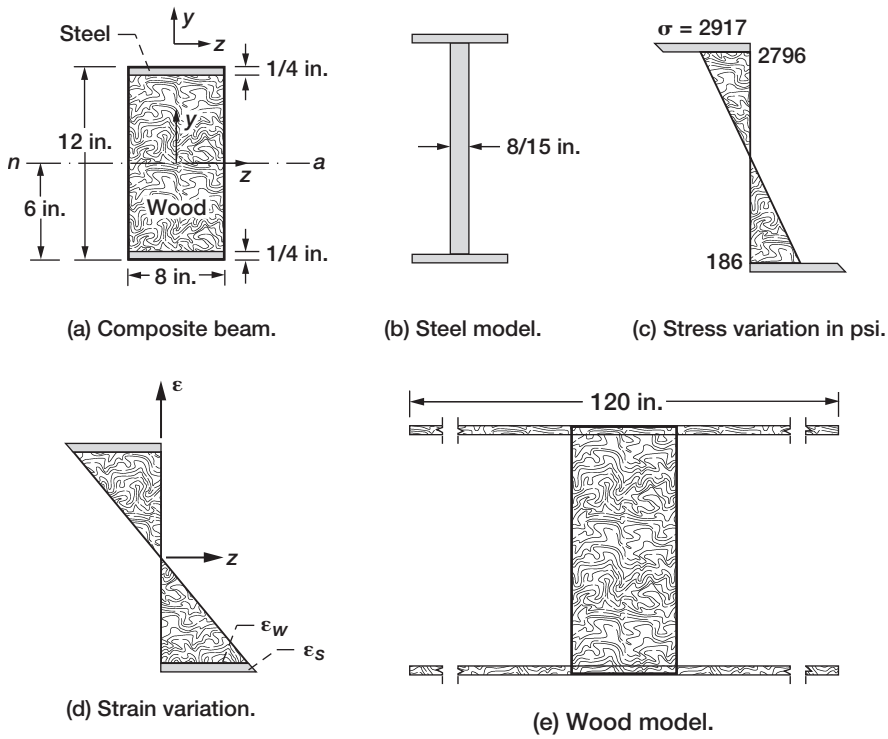

(a) Composite beam. (b) Steel model. (c) Stress variation in psi.

(d) Strain variation. (e) Wood model.

FIGURE 3-48 *Analysis of a composite beam.*

$$I_s = \frac{1}{12}8 \times 12^3 - \frac{1}{12}\left(8 - \frac{8}{15}\right)\left(12 - 2 \times \frac{1}{4}\right)^3 = 205.68\,\text{in.}^4$$

$$\sigma = \frac{-My}{I_s} = \frac{-100 \times 10^3}{205.68}y = -468.2y\,\text{psi}$$

At

$$y = 6\,\text{in.}, \qquad \sigma = -2917\,\text{psi}$$

$$y = \left(6 - \frac{1}{4}\right)\text{in.}, \quad \sigma = -2796\,\text{psi}$$

Stress in wood at $y = 5.75$ in.,

$$\sigma_w = \left(\frac{\sigma_s}{E_s}\right)E_w = \frac{\sigma_s}{n} = 186.4\,\text{psi} \tag{3-81}$$

The stress variation across the cross-section is shown in Fig. 3-48*c*. In the steel material, the stress is $\sigma = 2917$ psi at the top fiber and $\sigma = 2796$ psi at the interface. In the wood material, the maximum stress is $\sigma = 186$ psi. A stress jump of $\Delta\sigma = 2796 - 186 = 2610$ psi occurs at the interface. The strain at the interface is continuous $[\varepsilon = \varepsilon_s(= 2796/E_s = 93 \times 10^{-6}) = \varepsilon_w(= 186/E_w = 93 \times 10^{-6})]$ as shown in Fig. 3-48*d*. The strain continuity avoids delaminating at the interface.

Wood Model: The equivalent width is obtained using the inverse ratio ($1/n = 15$). The steel section is converted into an equivalent wood section. Such a section has the same depth, but its width is increased ($8n = 120$ in.). The wood model is shown in Fig. 3-48*e*. It is also like an I-beam that can utilize the material to its full capacity. The stress is calculated from the flexural formula for the wood model ($\sigma = -My/I$).

$$
\begin{aligned}
I_w &= \frac{1}{12} \times 120 \times 12^3 - \frac{1}{12} \times (120 - 8) \times 11.5^3 \\
&= 17{,}280 - \frac{112}{12} \times 1520.875 \\
&= (17.28 - 14.195) \times 10^3 \\
&= 3.085 \times 10^3 \text{ in.}^3
\end{aligned}
$$

$$
\begin{aligned}
&\sigma_w = \frac{My}{I} = \frac{100\,y}{3.085} = 32.41y \\
&\sigma_w \text{ at } y = 6 \text{ in.} = 32.41 \times 6 = 194.48 \text{ psi} \\
&\sigma_s = \frac{194.48}{E_w} \times E_s = 194.48 \times 15 = 2917 \text{ psi} \\
&\sigma_s \text{ at } y = 5.75 \text{ in.} = 32.41 \times 5.75 \times 15 = 2795.6 \text{ psi} \\
&\sigma_w \text{ at } y = 5.75 \text{ in.} = 32.41 \times 5.75 = 186.4
\end{aligned} \tag{3-82}
$$

The stress in the wooden model is changed to obtain the stress in steel. The actual stress variation is identical to that in Fig. 3-48*c*. Either the steel or wood model can be used, and the choice is not important.

EXAMPLE 3-21

A reinforced concrete beam made of concrete with steel reinforcement is shown in Fig. 3-49*a*. It is 50 cm deep and 25 cm wide. Two 25-mm-diameter steel bars that are located 50 mm from the bottom surface reinforce it. Determine the stress variation over the cross-section for a moment ($M = 80$ kN-m). Use $E_s = 200$ GPa and $E_c = 25$ GPa as Young's modulus for steel and concrete, respectively.

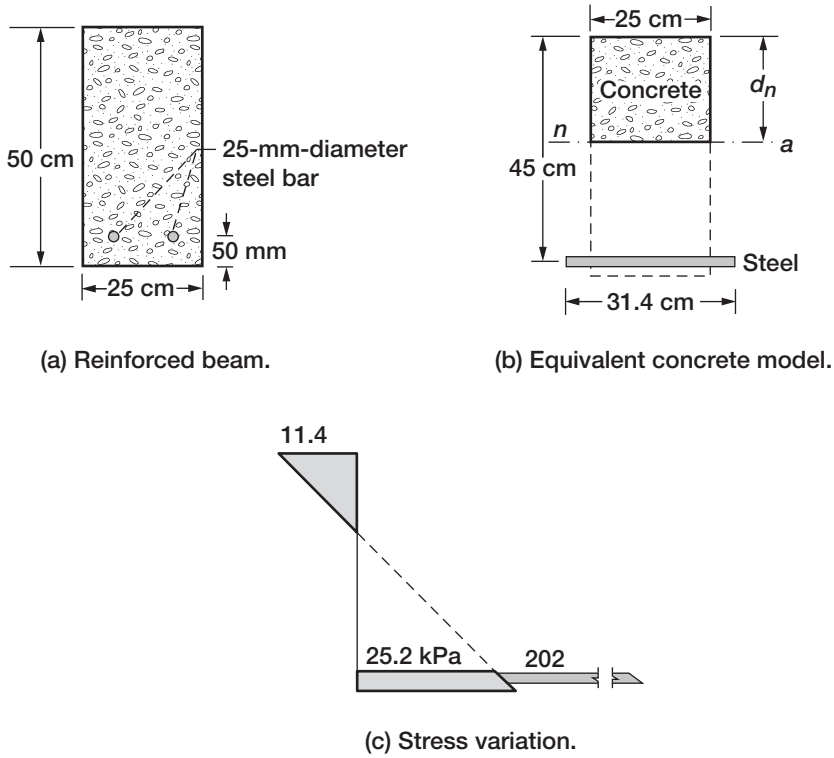

FIGURE 3-49 *Analysis of a reinforced concrete beam.*

Solution

Concrete is a good material in compression, but it is weak in tension. It is customary to neglect the tensile strength of concrete in the analysis of a reinforced beam. The calculation uses meter as the length unit and the dimensions are

$$d = 0.5\,\text{m}$$
$$b = 0.25\,\text{m}$$
$$n = \frac{E_s}{E_c} = \frac{200}{25} = 8$$

The area of steel reinforcement is

$$A_s = 2\frac{\pi d_{bar}^2}{4} = \frac{\pi}{2}\left(\frac{25}{1000}\right)^2 = 982 \times 10^{-6}\,\text{m}^2 \tag{3-83}$$

The steel area can be considered as an equivalent rectangle with a depth equal to the bar diameter and a width calculated as the ratio of area to diameter as

$$b_s = \frac{A_s}{d_{\text{bar}}} = \frac{982 \times 10^{-6}}{25 \times 10^{-3}} = 39.3 \times 10^{-3}\ \text{m} \tag{3-84a}$$

The equivalent concrete dimension (b_{cc}) is obtained as the product of b_s and n.

$$b_{cc} = b_s \times n = 39.3 \times 10^{-3} \times 8 = 314 \times 10^{-3}\ \text{m} \tag{3-84b}$$

For the calculation, the concrete model shown in Fig. 3-49*b* is used. The depth of the neutral axis is d_n and is not yet known. It is assumed that the concrete is in compression above the neutral axis, but this is neglected below the neutral axis because it might have cracked due to tension. The tensile strength is provided by steel, which is shown as a rectangle with a depth of 25 mm and a width of 31.4 cm located 45 cm from the top fiber. To use the beam formula ($\sigma = My/I$), we have to calculate the location of the neutral axis and the moment of inertia about this axis.

The depth of the neutral axis is calculated by equating the moment of area of concrete and steel to be zero about the neutral axis. In such a calculation, the contribution that the steel depth makes to the moment of area is neglected because it is a small quantity. The neutral axis calculation requires the solution of a quadratic equation that is obtained by taking the moment of concrete and steel about the neutral axis.

$$\begin{aligned}
&0.25 d_n \frac{d_n}{2} - 8 \times 982 \times 10^{-6} \times (0.45 - d_n) = 0 \\
&1000\, d_n^2 + 62.84 d_n - 28.32 = 0 \\
&d_n = \frac{-62.85 \pm \sqrt{62.85^2 + 4 \times 1000 \times 28.32}}{2 \times 1000} \\
&d_n = (0.14, -0.20) m
\end{aligned} \tag{3-85}$$

The quadratic equation has a positive root at $d_n = 0.14$ m. Its negative root ($d_n = -0.20$ m) is discarded. For the concrete model, the moment of inertia about the neutral axis is calculated as

$$\begin{aligned}
I &= \frac{1}{12} \times 0.25 \times 0.14^3 + 0.25 \times 0.14 \times \left(\frac{0.14}{2}\right)^2 \\
&\quad + 8 \times 982 \times 10^{-6} \times (0.45 - 0.14)^2 \\
&= (57.17 + 171.5 + 755) \times 10^{-6} = 984 \times 10^{-6} m^4 \\
\sigma &= -\frac{My}{I} = \frac{80}{984 \times 10^{-6}} y = 81.3y \times 10^3\ \text{kPa}
\end{aligned}$$

Stress (σ_c) at the top concrete fiber,

$$\sigma_c = -81.3 \times 10^3 \times 0.14 = 11.38\,\text{MPa (compression)}$$

Stress (σ_s) in steel,

$$\sigma_s = 8 \times 81.3 \times (0.45 - 0.14) \times 10^3 = 202\,\text{MPa (tension)} \qquad (3\text{-}86)$$

The stress distribution is shown in Fig. 3-49c. The stress at the top concrete fiber is $\sigma_c = 11.4$ kPa, and it is compressive. In the steel reinforcement, the stress is tensile ($\sigma_s = 202$ kPa). If we assume that the concrete has not cracked, then near the steel reinforcement, the stress would be $\sigma_{sc} = 202/8 = 25.2$ kPa. The stress jump at the interface would be 176.8 kPa. Concrete cracks because it cannot sustain 176.8 kPa tensile stress.

Problems

Use the material properties given in Appendix 5 to solve the problems.

3-1 Draw the shear force and bending moment diagrams for the following beam examples.

(a) A cantilever beam of length $\ell = 3a$ is subjected to a uniform load ($p = 1$ lbf/unit length) along the mid third of its span, as shown in Fig. P3-1*a*.
(b) A cantilever beam of length $\ell = 4$ m is subjected to a uniform load ($p = 1$ kN/m) for the quarter span and a concentrated load of magnitude $P = 3$ kN at the midspan, as shown in Fig. P3-1*b*.
(c) A 30-ft-long simply supported beam is subjected to a uniformly increasing distributed load ($p = 20\ (\ell - x)$ lbf per ft), as shown in Fig. P3-1*c*.
(d) A 5-m-long cantilever beam is subjected to a midspan moment ($M_0 = 50$ kN-m), as shown in Fig. P3-1*d*.
(e) A simply supported beam of span ℓ is subjected to two concentrated loads of magnitude P, as shown in Fig. P3-1*e*.
(f) A simply supported beam of span 15-ft is subjected to two concentrated loads of magnitude P at one-third and two-thirds span locations, as shown in Fig. P3-1*f*.
(g) A simply supported beam with a 10-m span is subjected to a uniformly distributed load ($p = 4$ kN/m) along 2 m, as shown in Fig. P3-1*g*.
(h) A simply supported beam with a 20-ft span is subjected to uniformly increasing distributed loads of magnitude $p = 1$ to 5 kip/ft, as shown in Fig. P3-1*h*.
(i) A 40-ft-long simply supported beam is subjected to a uniformly distributed load of magnitude $p = 40$ lbf/ft along the central half span, as shown in Fig. P3-1*i*.
(j) The 10-m-long simply supported beam has a 4-m overhang, as shown in Fig. P3-1*j*. It is subjected to a moment (M_0) at its free end.
(k) The 10-m-long simply supported beam has 2-m overhangs, as shown in Fig. P3-1*k*. It is subjected to a moment ($M_0 = 40$ kN-m) at one end and a load (P) at the other end.

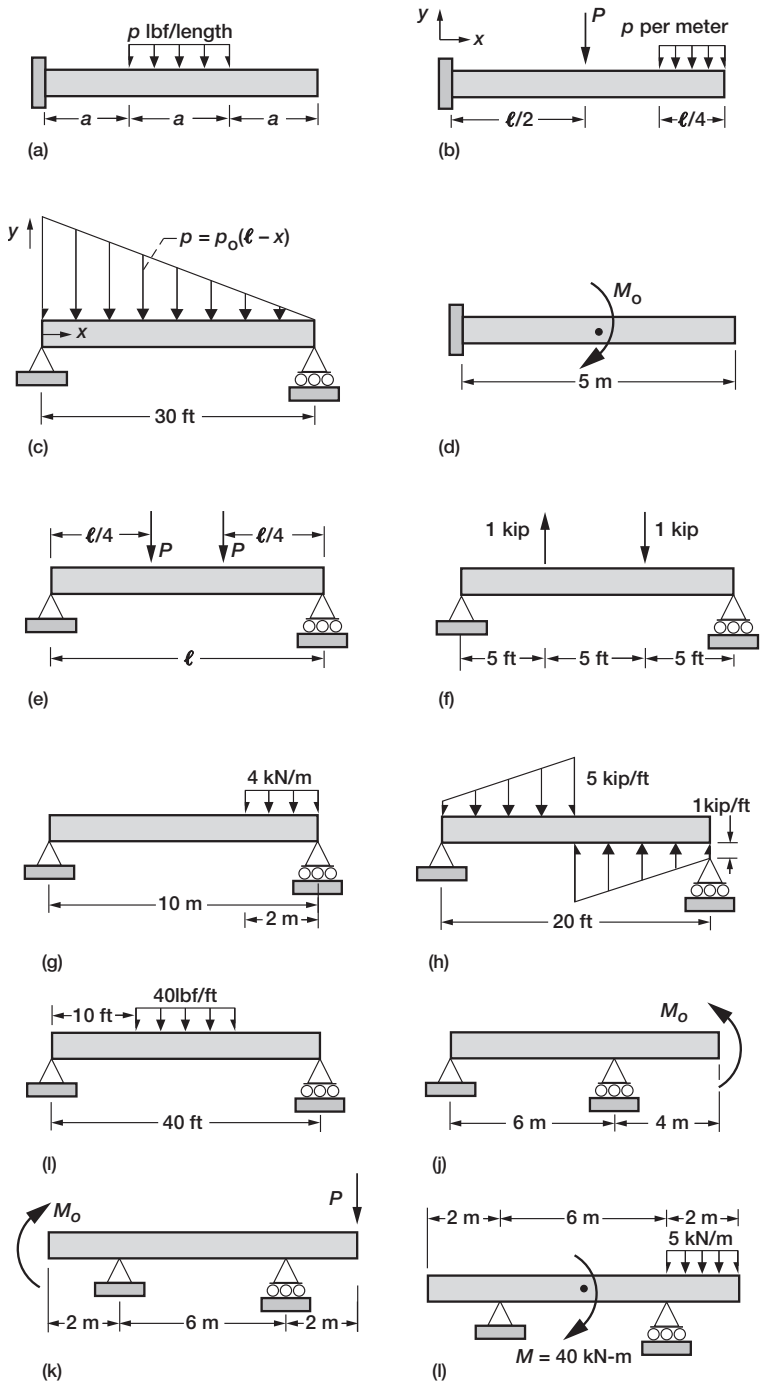
p lbf/length
a
a
a
(a)
y
x
P
p per meter
ℓ/2
ℓ/4
(b)
y
p = p_o(ℓ − x)
x
30 ft
(c)
M_o
5 m
(d)
ℓ/4
P
P
ℓ/4
ℓ
(e)
1 kip
1 kip
5 ft
5 ft
5 ft
(f)
4 kN/m
10 m
2 m
(g)
5 kip/ft
1kip/ft
20 ft
(h)
40lbf/ft
10 ft
40 ft
(I)
M_o
6 m
4 m
(j)
M_o
P
2 m
6 m
2 m
(k)
2 m
6 m
2 m
5 kN/m
M = 40 kN-m
(l)

FIGURE P3-1

(l) The 10-m-long beam has 2-m overhangs on either side, as shown in Fig. P3-1*l*. It is subjected to a moment (M_0) at the midspan and to a uniform load ($p = 5$ kN/m) along the overhang.

3-2 Verify the shear force diagram using the differential relationship between bending moment and shear force for the beams in Problems 3-1*c*, 3-1*f*, and 3-1ℓ.

3-3 Verify the bending moment diagram using the integral relationship between the bending moment and shear force for the beams in Problems 3-1*a* and 3-1*k*.

3-4 Determine the distribution of normal stress and strain and shear stress and strain, along the depth of the beam in Problem 1-*f* for the following two cases:

(a) The beam is made of steel with a rectangular cross-section that is 20 cm deep and 10 cm thick.
(b) The beam is an aluminum I-beam with the dimensions shown in Fig. P3-4*b*

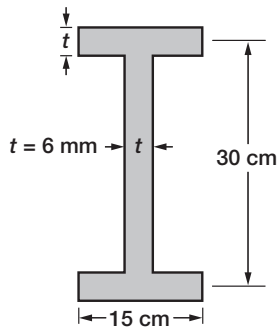

FIGURE P3-4*b*

3-5 Generate the elastic curves for the beam problems (Problems 3-1*a*, 3-1*c*, and 3-1*g*). Assume a uniform Young's modulus (E) and moment of inertia (I).

3-6 The aluminum beam shown in Fig. P3-6 has a uniform temperature variation over the ambient along its length, as shown in the figure. Calculate its displacement function due to the temperature variation.

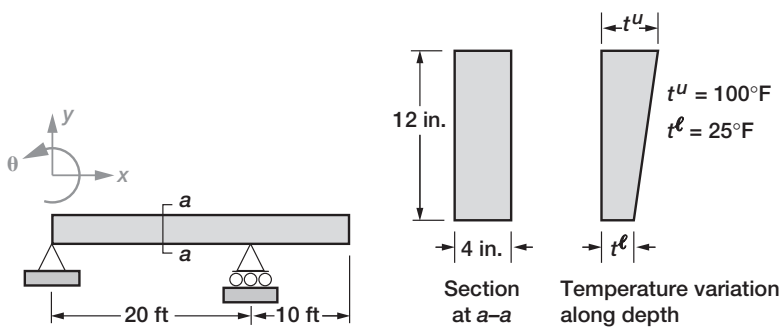

FIGURE P3-6

3-7 The temperature variation in Problem 3-6 is confined to the overhang portion of the beam. Generate its elastic curve.

3-8 The roller support of the aluminum beam in Problem 3-6 has a settling of 2 in. along the negative y-coordinate direction. Calculate the displaced shape of the beam.

3-9 For the four beam cross-sections shown in Fig. P3-9,

(a) Calculate the shear stress and shear flow for a unit value of shear force applied along the negative y-coordinate axis.
(b) Locate the shear center for each cross-section.

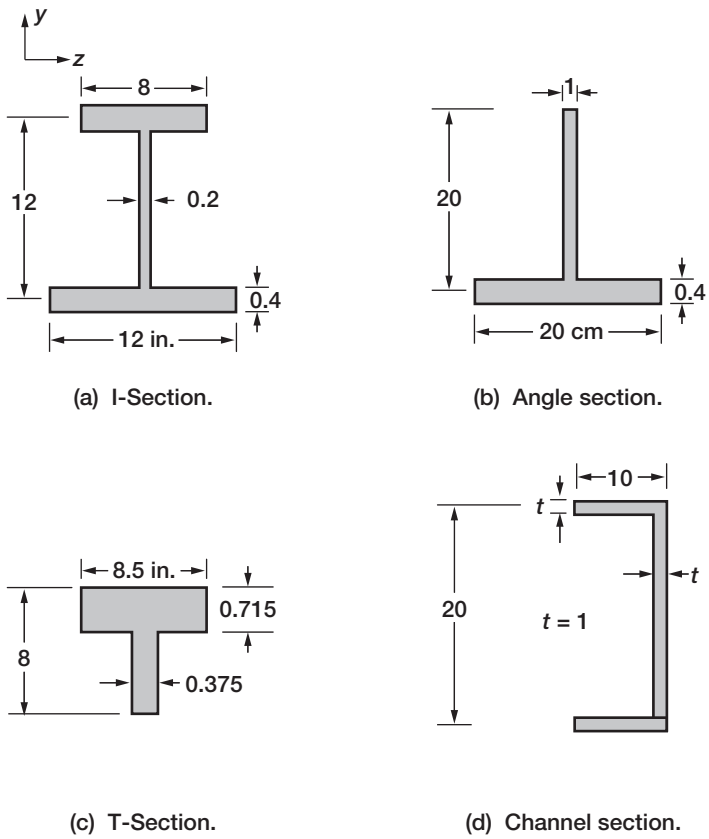

FIGURE P3-9

3-10 A 25-ft-long simply supported beam subjected to a load ($P = 10$ kip) at the center span is shown in Fig. P3-10. Calculate the resistance of the screws for a 3 in. spacing for the two built-up sections shown in the figure.

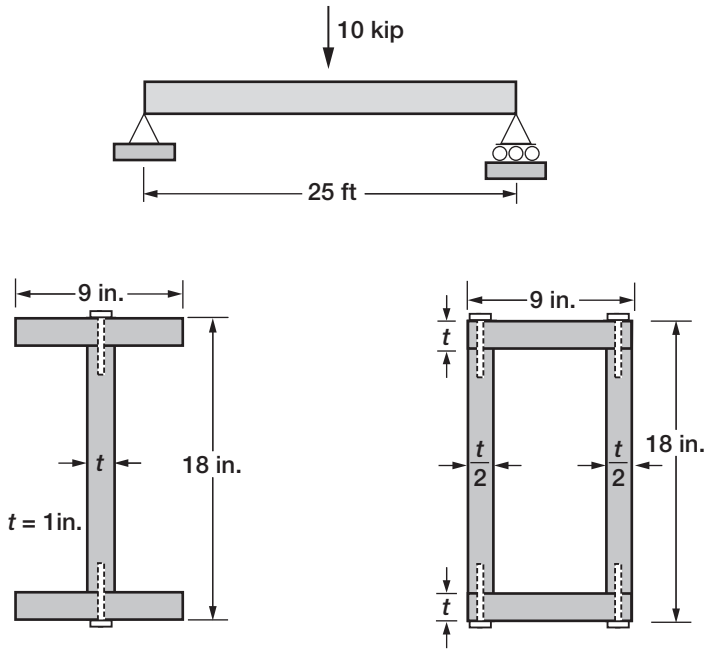

FIGURE P3-10

3-11 A 4-m-long cantilever beam is subjected to a load ($P = 10$ kN), as shown in Fig. P3-11. Calculate, at the mid-span of the beam, the stress and strain along the beam depth and at

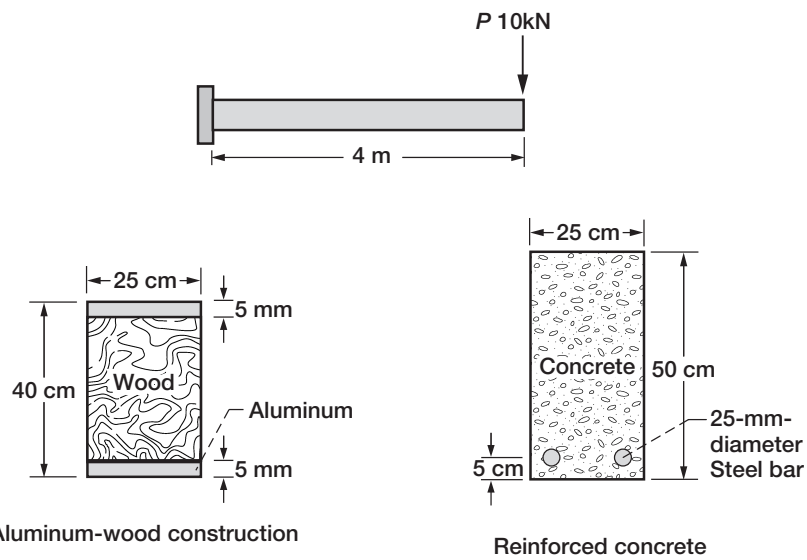

FIGURE P3-11

the interfaces for the composite cross-sections shown in figure. The first cross-section is made of wood with aluminum plates at the top and bottom faces as shown in the figure. The concrete beam is reinforced with two 25-mm bars in the second section.

3-12 Verify the dimensional stability of the following eight beam formulas in SI base units by calculating the dimensions of the left and right variables. The definitions of the variables are identical to those discussed in this chapter.

(a) Flexure formula: $\sigma = -\frac{My}{I}$
(b) Shear stress formula: $\tau = \frac{VQ}{It}$
(c) Shear flow formula: $q = \frac{VQ}{I}$
(d) Bending moment and shear force relationship: $V = -\frac{dM}{dx}$
(e) Displacement formulas:

(1) $\dfrac{d^4v}{dx^4} = \dfrac{p}{EI}$

(2) $\dfrac{d^3v}{dx^3} = -\dfrac{V}{EI}$

(3) $\dfrac{d^2v}{dx^2} = \dfrac{M}{EI}$

(f) Hooke's law: $\sigma = E\varepsilon$
(g) Material property: $G = \frac{E}{2(1+\nu)}$
(h) Relations: $M_R = P\ell$, and $R = \frac{Pa}{\ell}$

3-13 For a determinate structure, answer "true or false" with illustration if required.

(a) The number of boundary restraints cannot exceed three.
(b) Four restraints can make a cantilever beam unstable.
(c) Equilibrium equations are sufficient to calculate internal moment and shear force.
(d) The number of equilibrium equations sometimes may be insufficient for the calculation of all the reactions.
(e) Reactions can be a function of the beam material.
(f) Reaction, load, and applied moment follow the *t*-sign convention.
(g) Internal moment and shear force follow the *n*-sign convention.
(h) Stress and strain follow the *n*-sign convention.
(i) Displacement follows the *n*-sign convention.
(j) The shear force and bending moment are independent of each other.
(k) Shear force and bending moment depend on one or both of the material properties: Young's modulus and Poisson's ratio.
(l) The normal and shear stresses are independent of the beam material.
(m) The normal and shear strains are independent of the beam material.
(n) No stress is induced in the beam because of the change in temperature.
(o) No strain is induced in the beam because of the change in temperature.
(p) No strain is induced in the beam because of support settling.
(q) Temperature variation can induce a reaction.

(r) There is no deflection in a beam because of support settling.
(s) Temperature variation cannot induce displacement.
(t) In displacement calculation, the shear strain is not accounted.
(u) Beam deflection is due only to flexural strain.
(v) A plane section before deformation remains a plane even after deformation.
(w) There is no rotation of a plane section during deformation.
(x) Stress can be discontinuous at the interface of a composite beam.
(y) Strain can be discontinuous at the interface of a composite beam.
(z) The shear center and the centroid coincide for a cross-section that has two axes of symmetry.

(aa) The location of the shear center depends on the magnitude of the shear force.
(bb) The shear center is a property of the shape of the cross-section.
(cc) Even when a shear load is applied along the shear center, the cross-section can twist in addition to flexing.
(dd) Stress is always continuous.
(ee) Strain is sometimes continuous.
(ff) Displacement can be discontinuous at times.
(gg) The screws fastening a two-material interface resist the normal stress at the location.
(hh) The screws fastening a two-material interface resist the shear stress at the location.
(ii) Concrete is reinforced because it is weak in compression.

4 Determinate Shaft

A *shaft* is a structural member that is used to transmit power as well as rotational motion. A ship's propeller shaft and an automotive drive shaft transmit power. A shaft provides the axis of rotation for gear trains and flywheels. This structural member has applications in automotive and aircraft engines, pulleys and sprockets, clock mechanisms, and other machinery. A typical shaft can be a straight cylinder, a stepped cylinder, and the frustum of a cone with a solid or hollow core. The cross-section of a shaft can also take a noncircular shape. A shaft can resist torsional load (or torque), bending moment, and axial load. This chapter is confined to the analysis of a determinate shaft of simple geometry that is subjected only to torque.

A circular shaft cantilevered out of a wall is depicted in Fig. 4-1*a*. It has a length ℓ with a uniform circular cross-section and radius R. It is subjected to a torque load (T^{ℓ}) that acts along the axis of the shaft, which is considered as the x-coordinate axis. The shaft can be made of an isotropic elastic material with shear modulus G. Its response variables consist of an internal torque (T), shear stress (τ), and angle of twist (φ). The goal of analysis is to calculate the three variables (T, τ, and φ). The applied torque, or the torque load (T^{ℓ}) follows the n-sign convention, and it is positive when it is directed along the x-coordinate axis. The induced or internal torque shown in Fig. 4-1*b* is positive, and it follows the t-sign convention. The shear stress (τ) follows the t-sign convention and it has a linear variation along the radius as shown in Fig. 4-1*c*. The angle of twist as shown in Fig. 4-1*d* is positive and follows the n-sign convention.

The stress and deformation in a shaft are primarily due to the applied torque because temperature and support settling have little effect. Temperature does not change the response because no shear strain is induced in a shaft made of an isotropic material. Settling of the support of a shaft, which represents a slippage at the boundary, induces a uniform rigid body rotation (φ_0) throughout its length. Because of the circular symmetry, this rotation is inconsequential, except that it changes the reference to measure the angle of twist (φ) without any change to the angle (φ) itself. The analysis, in other words, is for the applied

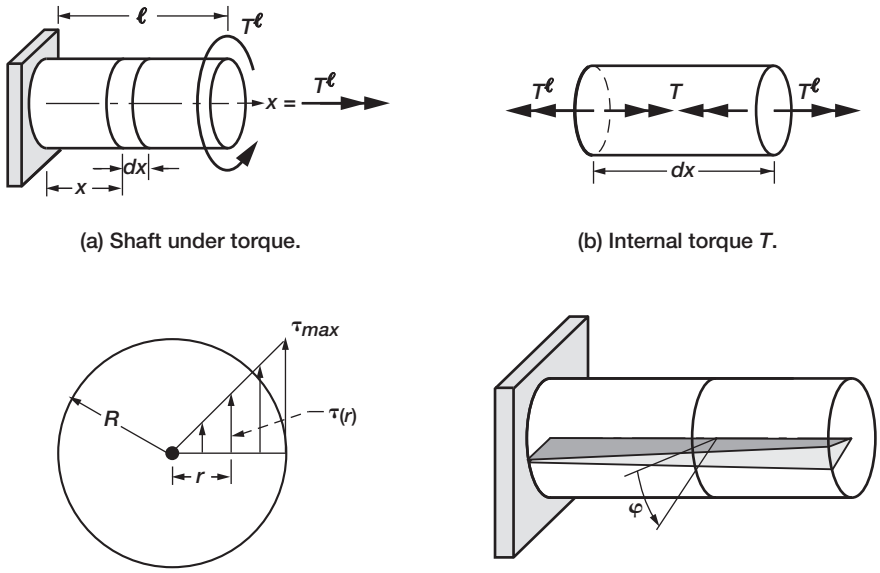

(a) Shaft under torque.

(b) Internal torque T.

(c) Variation of shear stress in cross-section.

(d) Deformation, or angle of twist, φ.

FIGURE 4-1 *Torsion of a shaft.*

torque load, and it is introduced in stages that included the analysis of internal torque, torsion formula, and deformation analysis.

4.1 Analysis of Internal Torque

A shaft resists an external torque load by inducing internal torque. The external load can be applied at a point (T^ℓ), or it can be distributed over a portion of the shaft length (t^ℓ), as shown in Fig. 4-2*a*. The line of action of the load must be along the shaft axis, or the x-coordinate axis. In USCS units torque is specified in units of inch-pound force (in.-lbf) and distributed torque (t^ℓ) in units of inch-pound force per inch (in.-lbf/in.). In SI units, torque can be specified in kN-m and t^ℓ in units of kN-m/m. The internal torque (T) is determined by applying the rotational equilibrium along the θ_x direction, which is also the direction of torque and rotation φ. The single equilibrium equation represents the summation of torques or moments (M_x) along the rotational x-coordinate direction.

$$\Sigma M_x = \Sigma T = 0 \tag{4-1}$$

The equilibrium equation is illustrated through the solution of examples. In these examples, two-dimensional sketches, which are sufficient to illustrate the analysis, are employed.

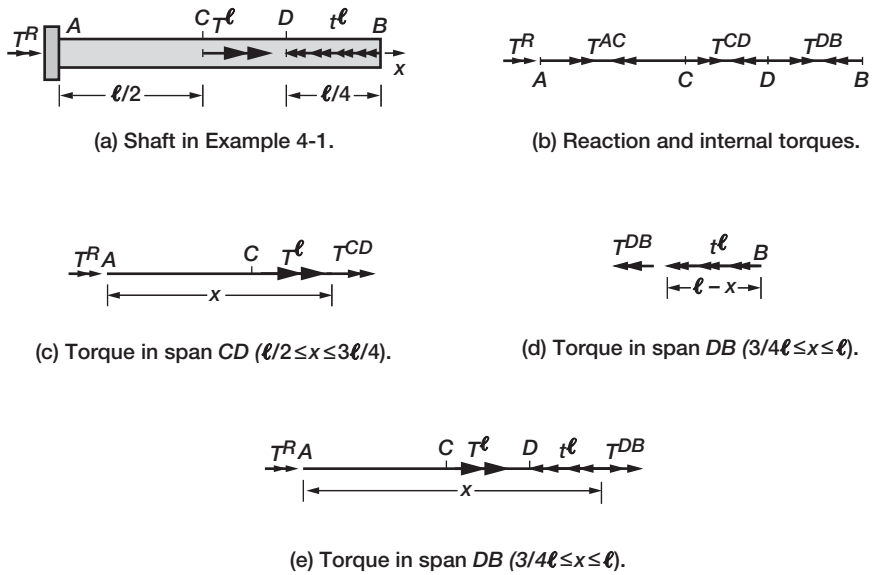

(a) Shaft in Example 4-1.

(b) Reaction and internal torques.

(c) Torque in span *CD* ($\ell/2 \le x \le 3\ell/4$).

(d) Torque in span *DB* ($3/4\ell \le x \le \ell$).

(e) Torque in span *DB* ($3/4\ell \le x \le \ell$).

FIGURE 4-2 *Analysis of a cantilevered shaft.*

EXAMPLE 4-1

Determine the internal torque in a circular cantilever shaft of diameter d and length ℓ that is subjected to a torque load (T^ℓ) at the midspan and a distributed torque (t^ℓ) in the fourth quarter of the span, as shown in Fig. 4-2*a*.

Solution

The three internal torques: (T^{AC}) in span segment AC ($0 \le x \le \ell/2$); (T^{CD}) in CD ($\ell/2 \le x \le 3\ell/4$); and (T^{DB}) in DB ($3\ell/4 \le x \le \ell$) are marked in Fig. 4-2*b*. Reaction (T^R) marked in Fig. 4-2a is calculated to equilibrate the applied loads.

$$T^R + T^\ell - \frac{\ell t^\ell}{4} = 0$$

$$T^R = -T^\ell + \frac{\ell t^\ell}{4} \tag{4-2a}$$

Torque (T^{AC}) is calculated from EE at A using the free-body diagram shown in Fig. 4-2*b*.

$$T^{AC} + T^R = 0$$

$$T^{AC} = T^{\ell} - \frac{\ell t^{\ell}}{4} \tag{4-2b}$$

The internal torque (T^{CD}) is obtained from the equilibrium of torques in the free-body diagram shown in Fig. 4-2*c*.

$$T^{CD} + T^{\ell} + T^{R} = 0$$

$$T^{CD} = -T^{R} - T^{\ell} = -\frac{\ell t^{\ell}}{4} \tag{4-2c}$$

The internal torque (T^{DB}) is obtained from the equilibrium of torques in the free-body diagram for the short span *BD* shown in Fig. 4-2*d*.

$$-T^{DB} - t^{\ell}(\ell - x) = 0$$

$$T^{DB} = -t^{\ell}(\ell - x) \tag{4-2d}$$

An identical answer is obtained when torque (T^{DB}) is recalculated from the longer segment as shown in Fig. 4-2*e*.

$$T^{DB} - t^{\ell}\left(x - \frac{3\ell}{4}\right) + T^{\ell} + T^{R} = 0$$

$$T^{DB} = t^{\ell}\left(x - \frac{3\ell}{4}\right) - T^{\ell} - T^{R}$$

$$T^{DB} = t^{\ell}(x - \ell) \tag{4-2e}$$

Calculation of internal torque is quite simple because it requires only one equilibrium equation. The torque analysis may use the length of the shaft, but neither the material property nor the diameter is required.

EXAMPLE 4-2

A 120-in.-long shaft rests on two bearings at *A* and *D*. Two gears are mounted at the one-third and two-third span locations, as shown in Fig. 4-3*a*. The small gear at *B* rotates in the clockwise direction and exerts a torque of $T^{B} = -2$ in.-k. The big gear rotating in the counterclockwise direction exerts a torque $T^{C} = 10$ in.-k. The bearing at *A* is locked, whereas the shaft is free to rotate at *D*. Determine the internal torque in the shaft, neglecting the weight of the shaft and the gears.

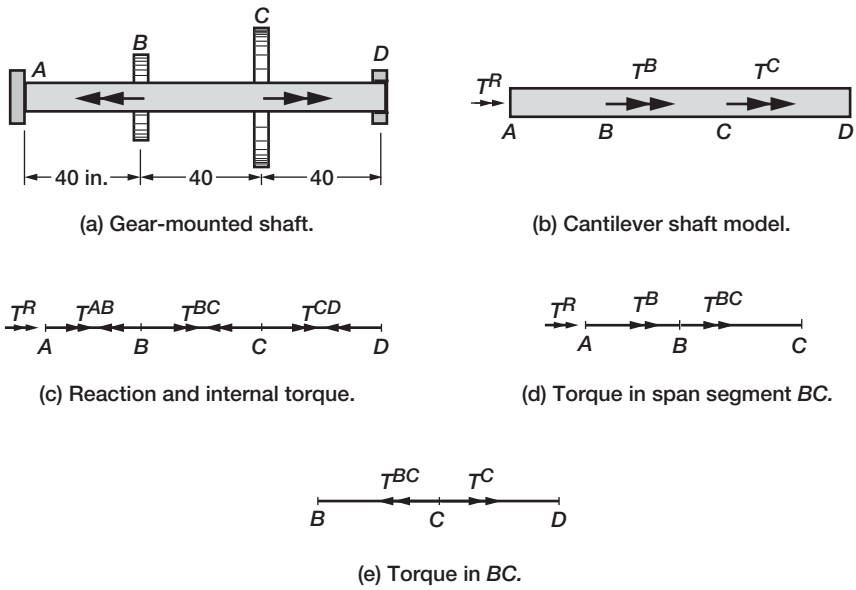

FIGURE 4-3 *Analysis of a gear-mounted shaft.*

Solution

For torque calculation, the cantilever model depicting the load (T^B, T^C) and reaction (T^R) is shown in Fig. 4-3*b*. It is fixed at *A* because the rotor is locked, and it is free at *D*. The counterclockwise motion of the big gear induces a positive torque ($T^C = 10$ in.-k) at *C* and a negative torque ($T^B = -2$ in.-k) at *B* because the small gear is rotating in the clockwise direction. The internal torque in span segment *AB* ($0 \le x \le 40$) is (T^{AB}), in *BC* ($40 \le x \le 80$) it is (T^{BC}), while the segment *CD* (with $80 \le x \le 120$) is torque free ($T^{CD} = 0$); see Fig. 4-3*c*.

The EE of the applied torques and the reaction (T^R) in Fig. 4-3*b* yields

$$T^R + T^B + T^C = 0$$

$$T^R = -T^B - T^C = -8 \text{ in.-k} \tag{4-3a}$$

The EE at A in the free-body diagram in Fig. 4-3*c* yields the internal torque (T^{AB}) in span segment *AB* as

$$T^R + T^{AB} = 0$$

$$T^{AB} = 8 \text{ in.-k} \tag{4-3b}$$

Torque in the segment BC ($40 \leq x \leq 80$) can be calculated using the neighboring segments either to the left or to the right of BC. For the left neighboring segment shown in Fig. 4-3d, the EE yield

$$T^R + T^B + T^{BC} = 0$$

$$T^{BC} = 8 + 2 = 10\,\text{in.-k} \tag{4-3c}$$

For the right neighboring segment in Fig. 4-3e, the EE yield

$$T^C - T^{BC} = 0$$

$$T^{BC} = T^C = 10\,\text{in.-k} \tag{4-3d}$$

An identical value is obtained for torque (T^{BC}) from both Eqs. (4-3c) and (4-3d), as expected. The torque is constant ($T^{BC} = 10$ in.-k) in span segment BC ($40 \leq x \leq 80$).

The torque in span segment AB ($T^{AB} = 8$ in.-k); in BC ($T^{BC} = 10$ in.-k); CD ($T^{CD} = 0$) and the reactive torque is ($T^R = -8$ in.-k). The material and diameter of the shaft are not used in the torque calculation.

4.2 Torsion Formula

The internal torque induces shear stress in the shaft. The relationship between the stress (τ) and the torque (T) is referred to as the torsion formula. It is developed in this section and would have the following form.

$$\tau = \frac{Tr}{J} \tag{4-4}$$

Here,

τ	τ (r) shear stress at r
r	distance from center
T	torque
J	polar moment of inertia, which is a property of the cross-section

The formula is illustrated for a shaft with a solid circular cross-section in Fig. 4-4a and a tube with an annular cross-section in Fig. 4-4b. The shear stress attains its maximum value (τ_{max}) at the outer fiber ($r = R$) for both the solid and annular shafts. The shear stress attains a zero value ($\tau = 0$) at the center of the shaft cross-section. The shear stress has a linear variation in the fiber at a distance r from the center as shown in Fig. 4-4a. For an annular cross-section, the shear stress attains minimum value (τ_{min}) at the inner wall ($r = R_0$), as shown in Fig. 4-4b. The polar moment of inertia (J) of a cross-section in Eq. (4-4) is a parameter analogous to the

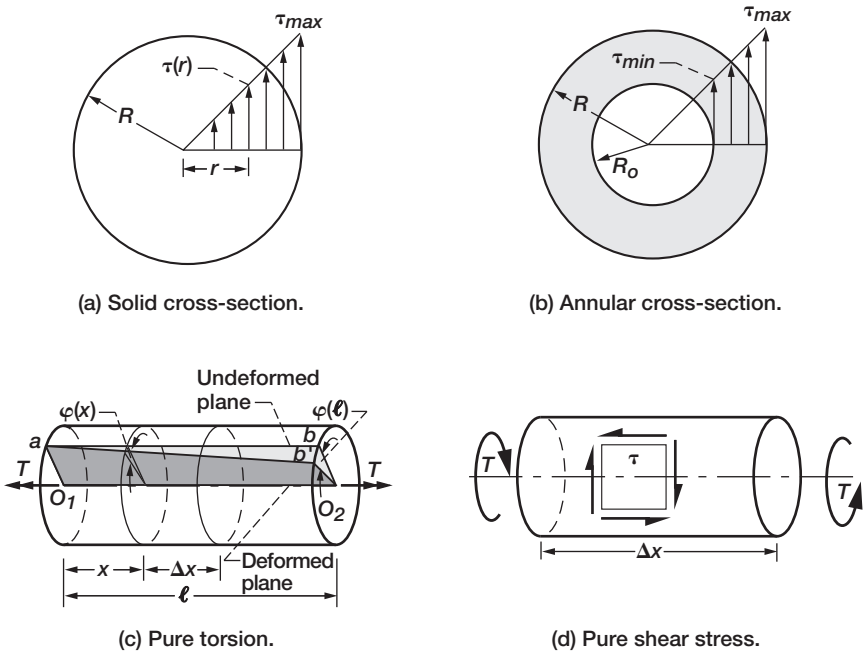

FIGURE 4-4 *Pure torsion of a shaft.*

moment of inertia (I) of a beam in the flexure formula. The torsion formula is credited to Coulomb (1736–1806) for a circular cross-section and to Saint-Venant (1797–1886) for a general cross-section. The derivation is based on assumptions pertaining to material property, a pure torsion condition, and the kinematics of deformation.

The shaft material is assumed to be linearly elastic. The shear stress (τ) and shear strain (γ) are related through the shear modulus (G) as ($\tau = G\gamma$). A shaft is twisted by torque (T) acting at its ends, as shown in Fig. 4-4c. An arbitrary cross-section at a distance x from the origin is subjected to the same torque (T). Such a uniform torque state is referred to as "pure torsion." Pure torsion induces pure shear stress (τ), as shown in the elemental block (Δx) in Fig. 4-4d. Because of the circular symmetry of the shaft cross-section, the shear stress varies linearly from the center to the outer radius as shown in Fig. 4-4a.

$$\tau(r) = \frac{\tau_{\max}}{R} r \tag{4-5a}$$

Here,

R radius of the shaft
$\tau_{\max}$ maximum value of shear stress

Shear stress (τ) is replaced by shear strain (γ) using Hooke's law ($\tau = G\gamma$), and a linear variation is obtained for the strain.

$$\gamma_{\max}(r) = \frac{\tau}{G} = \frac{\tau_{\max}}{RG} r \tag{4-5b}$$

Twisting of a shaft under uniform torque is shown in Fig. 4-4*c*. If the left end of the shaft is restrained, the right end will rotate by angle φ. The angle φ is referred to as the angle of twist. During the process of twisting, an undeformed plane marked "o_1abo_2" will deform into the position "$o_1ab'o_2$," which is also a plane. In other words, a plane section before deformation remains a plane after deformation.

4.3 Deformation Analysis

Deformation analysis establishes the relationship between the angle of twist and the shear strain. It is illustrated by considering an elemental block of length (Δx), as shown in Fig. 4-5*a*. The right-hand section twists with respect to the left by a small angle. Before deformation, an elemental area on its outer wall is marked "$z_1-z_2-z_3-z_4$." Let this elemental block twist by the angle $\Delta\varphi$. The location of the deformed area is shown as $z_1-z_2'-z_3'-z_4$.

The definition of shear strain (γ) is also illustrated in Fig. 4-5*a*. The angle $z_2-z_1-z_4$ is a right angle ($\pi/2$) in the undeformed sector "$z_1-z_2-z_3-z_4$," and it is located at the outer surface of the shaft. The deformed sector occupies the position marked "$z_1-z_2'-z_3'-z_4$." The original right angle $z_2-z_1-z_4$ has changed to "$z_2'-z_1-z_4$," which is ($\pi/2 - \gamma$). The change in the right angle is defined as the shear strain (γ) and it is the angle $z_2-z_1-z_2'$.

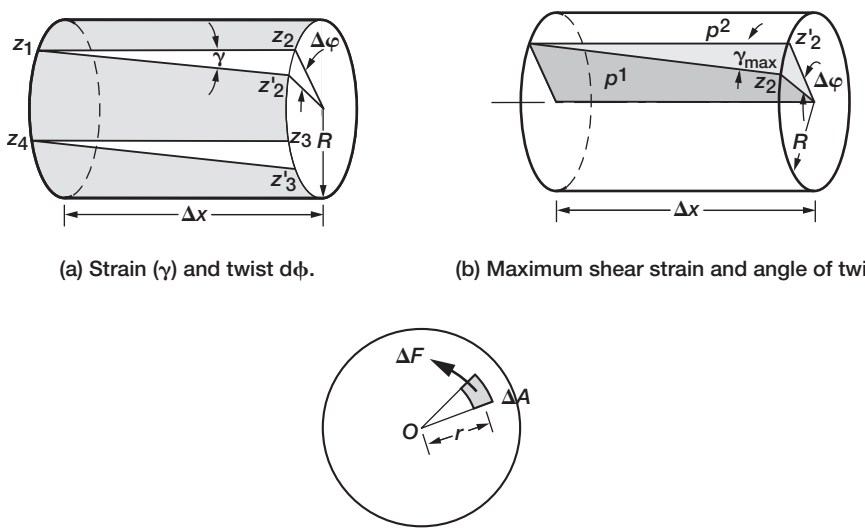

(a) Strain (γ) and twist dϕ.

(b) Maximum shear strain and angle of twist.

(c) Torque in a shaft cross-section.

FIGURE 4-5 *Relationship between strain and angle of twist.*

Assuming small deformation; the length of the elemental arc $z_2 - z_2'$ shown in Fig. 4-5*a* can be calculated from two different directions.

1. Along the longitudinal direction,

$$z_2 - z_2' = \Delta x \gamma_{\max} \tag{4-6a}$$

   The shear strain attains the maximum value ($\gamma_{\max}$) at the outer surface of the shaft, as shown in Fig. 4-5*b*. The plane (p_1) before deformation remains a plane (p_2) even after deformation.
2. Along the radial direction,

$$z_2 - z_2' = R\Delta\varphi \tag{4-6b}$$

The relationship between the shear strain and angle of twist is obtained by equating the arc length defined in Eqs. (4-6*a*) and (4-6*b*) as

$$\Delta x \gamma_{\max} = R\Delta\varphi$$

$$\gamma_{\max} = R(\mathcal{L}t\Delta x \to 0)\frac{\Delta\varphi}{\Delta x} = R\frac{d\varphi}{dx} \tag{4-6c}$$

Let the angle of twist per unit length, or the rate of change of angle of twist with respect to length, be defined as θ.

$$\theta = \frac{d\varphi}{dx} \tag{4-7a}$$

The angle θ is a constant under pure torsion because every section along the length of the shaft is subjected to the same torque. If a shaft of length ℓ produces an angle of twist φ, then the angle θ can be expressed as

$$\theta = \frac{d\varphi}{dx} = \frac{\varphi}{\ell} \tag{4-7b}$$

The relationship between shear strain, the angle of twist (φ), and angle θ becomes

$$\gamma_{\max} = R\theta = \frac{R\varphi}{\ell} \tag{4-7c}$$

The **torsion formula** is obtained by linking the shear stress to torque.

The force in an elemental cross-sectional area (ΔA) of the shaft shown in Fig. 4-5c is obtained as the product of stress (τ) and the elemental area as

$$\Delta F = \tau(r)\Delta A \tag{4-8a}$$

In the limit ($\Delta A \to 0$), ($dF = \tau(r)dA$). The corresponding torque about the center 0 is obtained as the product of ΔF and the radial distance r as

$$dT = rdF = r\tau(r)dA$$

Eliminate $\tau(r)$ in favor of τ_{max} using Eq. (4-5a) to obtain

$$dT = \frac{\tau_{max}}{R} r^2 dA \tag{4-8b}$$

Integration over the cross-sectional area yields the torque T as

$$T = \frac{\tau_{max}}{R} \int_A r^2 dA \tag{4-8c}$$

The polar moment of inertia (J) is defined as

$$J = \int r^2 dA \tag{4-8d}$$

$$T = \frac{\tau_{max}}{R} J \tag{4-8e}$$

$$\tau_{max} = \frac{TR}{J} \tag{4-8f}$$

Since ($\tau(r) = \tau_{max} \frac{r}{R}$) the torsion formula is obtained as

$$\tau(r) = \frac{Tr}{J} \tag{4-9a}$$

Strain can be calculated from Hooke's law as

$$\gamma(r) = \frac{Tr}{JG} \tag{4-9b}$$

Substitute strain for the angle of twist from Eq. (4-7c) into the stress-strain relationship to obtain

$$\tau_{max} = G\gamma_{max} = \frac{GR\varphi}{\ell} \tag{4-10}$$

Elimination of stress between Eqs. (4-8f) and (4-10) yields the angle of twist and torque relationship.

$$\frac{TR}{J} = \frac{GR\varphi}{\ell}$$

$$\varphi = \frac{T\ell}{JG} \tag{4-11}$$

The factor JG is called the shear rigidity of the shaft. The angle of twist has a linear variation along the length of the shaft. The angle $\varphi(x)$ at an intermediate location x in the shaft axis is obtained by replacing x in place of ℓ in Eq. (4-11).

$$\varphi(x) = \frac{Tx}{JG} \tag{4-12}$$

In a shaft, stress, strain, and angle of twist are calculated from Eqs. (4-9*a*), (4-9*b*), and (4-12), respectively.

EXAMPLE 4-3

A solid shaft and a hollow shaft, each of length 100 in. are subjected to a 10-in.-k torque as shown in Fig. 4-6*a*. The solid shaft, which is made of steel with Young's modulus $E = 30{,}000\,\text{ksi}$, Poisson's ratio $\nu = 0.3$, and weight density $\rho = 0.284\,\text{lbf/in.}^3$, has a diameter of 12 in. The hollow shaft, which is made of the same material, has an inside diameter that is 75 percent of its outside diameter, but its weight is equal to that of the solid shaft, as shown in Fig. 4-6*b*. Calculate the maximum stress and the angle of twist for both the shafts.

Solution

The equilibrium of load and reaction T^R shown in Fig. 4-6*a* yields ($T^R = -T^\ell = -10\,\text{in.-k}$). The internal torque ($T$) is uniform across the shaft length, and its value is obtained from the equilibrium of the free-body diagram shown in Fig. 4-6*c*.

$$T = T^\ell = 10\,\text{in.-k} \tag{4-13a}$$

The polar moment of inertia (J^S) of the solid shaft is

$$J^S = \frac{\pi}{32}d^4 = \frac{\pi}{32} \times 12^4 = 2036\,\text{in.}^4 \tag{4-13b}$$

The weight of the solid shaft (W^S) with diameter ($d = 12\,\text{in.}$) is

$$W^s = \rho V^s = \rho A\ell = \rho\frac{\pi d^2}{4}\ell = 0.284 \times \frac{\pi}{4} \times 12^2 \times 100 = 3.21\,\text{kip} \tag{4-13c}$$

The weight of the hollow shaft with outer diameter d_0 and inner diameter $d_i = 0.75d_0$ is obtained as a function of the outer diameter as

$$W^H = \rho V^H = \rho A^H\ell = \rho\frac{\pi}{4}\left(d_0^2 - d_i^2\right)\ell = \rho\frac{\pi}{4}\left[d_0^2 - (0.75d_0)^2\right]\ell = 9.759d_0^2\,\text{lbf} \tag{4-13d}$$

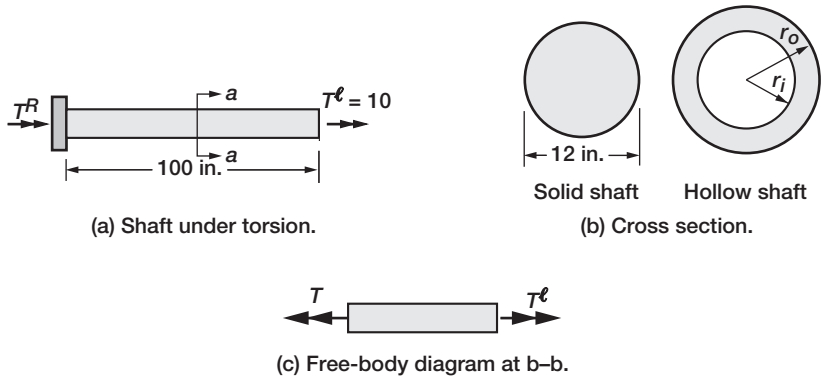

FIGURE 4-6 *Analysis of the shaft in Example 4-3.*

The outer diameter of the hollow shaft is obtained by equating the two weights ($W^S = W^H$) as

$$W^H = W^s: \quad 9.759 \quad d_0^2 = 3.21 \times 10^3 \quad d_0 = \sqrt{\frac{3.21 \times 10^3}{9.759}} = 18.14\,\text{in.} \tag{4-13e}$$

$$d_i = 0.75 \times 18.14 = 13.60\,\text{in.} \tag{4-13f}$$

The polar moment of inertia for the hollow shaft is

$$J^H = \frac{\pi}{32}\left(d_0^4 - d_i^4\right) = \frac{\pi}{32}\left(18.14^4 - 13.60^4\right) = 7266\,\text{in.}^4 \tag{4-13g}$$

The maximum shear stress at the outer fiber of the two shafts is

$$\tau_{\max}^S = \frac{TR}{J^s} = \frac{10 \times 10^3 \times 6}{2036} = 29.5\,\text{psi} \tag{4-13h}$$

$$\tau_{\max}^H = \frac{TR}{J^H} = \frac{10 \times 10^3 \times 9.07}{7266} = 12.5\,\text{psi} \tag{4-13i}$$

The shear modulus is calculated from the Young's modulus and the Poisson's ratio, and it is

$$G = \frac{E}{2(1+\nu)} = \frac{30{,}000}{2(1+0.3)} = 11{,}538\,\text{ksi} \tag{4-13j}$$

The angles of twist at the free end of the solid and hollow shafts are

$$\varphi^s = \frac{T\ell}{J^S G} = \frac{10 \times 10^3 \times 100}{2036 \times 11{,}538 \times 10^3} = 4.26 \times 10^{-5}\,\text{rad} = 2.44 \times 10^{-3}\,\text{deg} \qquad (4\text{-}13k)$$

$$\varphi^H = \frac{T\ell}{J^H G} = \frac{10 \times 10^3 \times 100}{7266 \times 11{,}538 \times 10^3} = 1.19 \times 10^{-5}\,\text{rad} = 0.68 \times 10^{-3}\,\text{deg} \qquad (4\text{-}13l)$$

$$\text{Stress ratio} = \frac{\tau^H_{\max}}{\tau^S_{\max}} = \frac{12.5}{29.5} = 0.42 \qquad (4\text{-}13m)$$

$$\text{Angle of twist ratio} = \frac{\varphi^H}{\varphi^S} = \frac{0.68 \times 10^{-3}}{2.44 \times 10^{-3}} = 0.28 \qquad (4\text{-}13n)$$

The maximum shear stress is less in the hollow shaft. It is only 42 percent that of the solid shaft. The hollow shaft has less angle of twist, which is 28 percent that of the solid shaft. A hollow shaft with weight equal to that of the solid shaft induces lower stress as well as a smaller angle of twist. For the problem, the hollow shaft should be preferred because it is more efficient than the solid shaft.

EXAMPLE 4-4

A stepped cantilevered shaft of length 120 in. is made of two members, as shown in Fig. 4-7*a*. The first steel shaft is a 80-in.-long tube with an outer radius r_0 of 6 in. and an inner radius r_i of 5 in. The second solid aluminum shaft has a radius r_s of 5 in. The first shaft carries a torque of $T^{\ell 1} = 6$ in.-k at its center span, whereas the second shaft is subjected to a torque of $T^{\ell 2} = 3$ in.-k, also at its center. The Young's modulus of steel is $E_1 = 30{,}000$ ksi and of aluminum is $E_2 = 10{,}000$ ksi. The Poisson's ratio for both materials is $\nu_s = \nu_a = \nu = 0.3$. Calculate the shear stress and angle of twist for the shaft.

Solution

The polar moments of inertia (J_1 and J_2) of the hollow and solid shafts, respectively, are

$$J_1 = \frac{\pi}{2}\left(r_0^4 - r_i^4\right) = \frac{\pi}{2}\left(6^4 - 5^4\right) = 1054\,\text{in.}^4 \qquad (4\text{-}14a)$$

$$J_2 = \frac{\pi}{2} r_s^4 = 981.7\,\text{in.}^4 \qquad (4\text{-}14b)$$

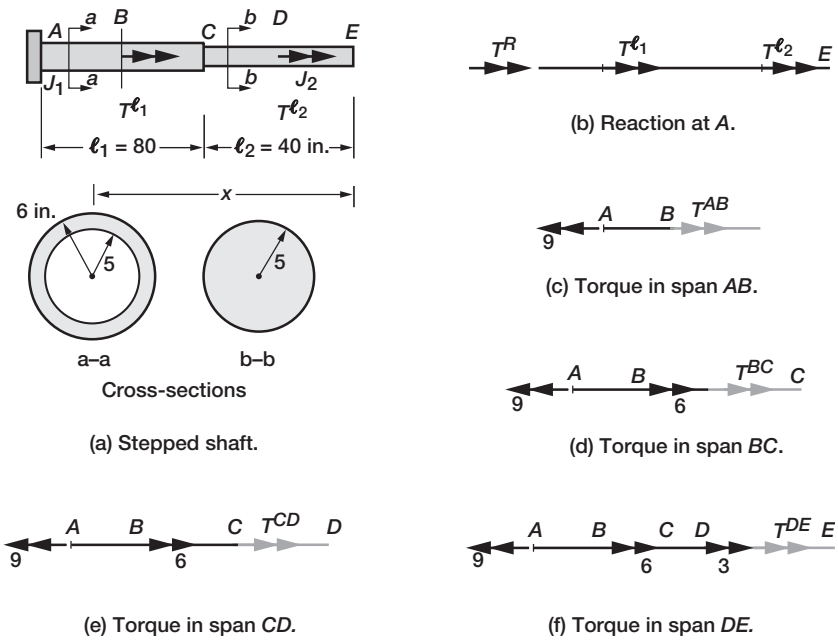

FIGURE 4-7 *Analysis of the stepped shaft in Example 4-4.*

The shear moduli and rigidities of the shafts are

$$G_1 = \frac{E_1}{2(1+\nu)} = 11{,}538\,\text{ksi}$$

$$G_2 = \frac{E_2}{2(1+\nu)} = 3846\,\text{ksi} \tag{4-14c}$$

$$J_1 G_1 = 12.16 \times 10^6\,\text{in.}^2\text{-k}$$

$$J_2 G_2 = 3.78 \times 10^6\,\text{in.}^2\text{-k} \tag{4-14d}$$

The reaction (T^R) is obtained from the equilibrium of reaction and loads as shown in Fig. 4-7*b*.

$$T^R + T^{\ell 1} + T^{\ell 2} = 0 \tag{4-14e}$$

$$T^R = -9\,\text{in.-k}$$

Likewise, the EE for the free-body diagrams in Figs. 4-7*c* to 4-7*f* yield the internal torque for the segments *AB* (T^{AB}), *BC* (T^{BC}), *CD* (T^{CD}), and *DE* (T^{DE}), respectively.

$$T^{AB} = 9\,\text{in.-k}$$

$$T^{BC} = 9 - 6 = 3\,\text{in.-k}$$

$$T^{CD} = 9 - 6 = 3\,\text{in.-k}$$

$$T^{DE} = 0\,\text{in.-k} \tag{4-14f}$$

The shear stresses at location A, and in the segments AB, BC, CD, and DE obtained from the torsion formula, are

$$\tau^{A} = \frac{T^{R}}{J_1} r_0 = \frac{9000 \times 6}{1054} = 51.23\,\text{psi}$$

$$\tau^{AB} = \frac{T^{AB}}{J_1} r_0 = \frac{9000 \times 6}{1054} = 51.23\,\text{psi}$$

$$\tau^{BC} = \frac{T^{BC}}{J_1} r_0 = \frac{3000 \times 6}{1054} = 17.1\,\text{psi}$$

$$\tau^{CD} = \frac{T^{CD}}{J_2} r_s = \frac{3000 \times 5}{981.7} = 15.3\,\text{psi}$$

$$\tau^{DE} = \frac{T^{DE}}{J_2} r_s = 0 \tag{4-14g}$$

The angles of twist for segments AB, BC, CD, and DE are

$$\Delta\varphi_{AB} = \frac{T^{AB} \times \ell_{AB}}{J_1 G_1} = \frac{9000 \times 40}{12.16 \times 10^6} = 29.6 \times 10^{-3}\,\text{rad} = 1.70\,\text{deg}$$

$$\Delta\varphi_{BC} = \frac{T^{BC} \times \ell_{BC}}{J_1 G_1} = \frac{3000 \times 40}{12.16 \times 10^6} = 9.87 \times 10^{-3}\,\text{rad} = 0.56\,\text{deg}$$

$$\Delta\varphi_{CD} = \frac{T^{CD} \times \ell_{CD}}{J_2 G_2} = \frac{3000 \times 20}{3.78 \times 10^6} = 15.87 \times 10^{-3}\,\text{rad} = 0.91\,\text{deg}$$

$$\Delta\varphi_{DE} = \frac{T^{DE} \times \ell_{DE}}{J_2 G_2} = 0 \tag{4-14h}$$

Angle of Twist in a Composite Shaft

Calculating the angle of twist in a composite shaft with a variation of parameters like internal torque and shear rigidity requires an extension of the formula ($\varphi = T\ell/JG$) given by Eq. (4-11). The formula for a very small length ($\Delta\ell$) can be written as

$$\Delta\varphi = \frac{T\Delta\ell}{JG}$$

In the limit $\Delta\ell \to 0$,

$$d\varphi = \frac{Td\ell}{JG}$$

$$\varphi = \int_0^{\ell} \frac{Td\ell}{JG} \tag{4-15}$$

Consider a composite shaft of total length ℓ made of p number of segments with the following lengths and shear rigidities: $\{\ell_1,(JG)_1, \ell_2,(JG)_2, \ldots, \ell_p,(JG)_p\}$. For such a shaft, Eq. (4-15) is integrated to obtain

$$\varphi = \int_0^{\ell_1+\ell_2+\ldots\ell p} \frac{Td\ell}{JG} = \int_0^{\ell_1} \frac{Td\ell}{JG} + \int_{\ell_1}^{\ell_2} \frac{Td\ell}{JG} +, \cdots, + \int_{\ell_{p-1}}^{\ell p} \frac{Td\ell}{JG}$$

$$\varphi = \frac{T_1\ell_1}{(JG)_1} + \frac{T_2\ell_2}{(JG)_2} +, \cdots, + \frac{T_p\ell_p}{(JG)_p} \tag{4-16a}$$

The total angle of twist is the sum of the individual contributions

$$\varphi = \sum_{i=1}^{p} \Delta\varphi_i$$

$$\Delta\varphi_i = \left(\frac{T\ell}{JG}\right)_i \tag{4-16b}$$

Consider a shaft with three segments with varying properties (T, J, G, and ℓ), as shown in Fig. 4-8.

The individual contributions to the angle of twist ($\Delta\varphi$) are

$$\Delta\varphi_1 = \frac{T_1\ell_1}{J_1G_1} = \left(\frac{T\ell}{JG}\right)_1 \qquad \Delta\varphi_2 = \left(\frac{T\ell}{JG}\right)_2 \qquad \Delta\varphi_3 = \left(\frac{T\ell}{JG}\right)_3$$

In a typical term, for example in term 2, the torque (T_2) and the rigidity $(JG)_2$ are assumed to be constant over the span segment ℓ_2. The term $\Delta\varphi_2 = (T\ell/JG)_2$ is the contribution to the angle of twist from segment 2. The angles of twist at locations D, C, B, and A are obtained as

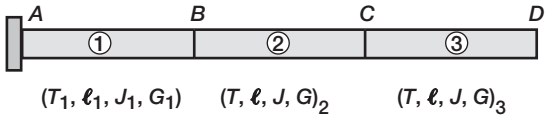

FIGURE 4-8 *Three-segment shaft.*

$$\varphi_D = \Delta\varphi_1 + \Delta\varphi_2 + \Delta\varphi_3$$
$$\varphi_C = \Delta\varphi_1 + \Delta\varphi_2$$
$$\varphi_B = \Delta\varphi_1$$
$$\varphi_A = 0 \tag{4-16c}$$

Returning to Example 4-4, we can calculate the angles of twist at different shaft locations as follows.

$$\varphi_E = \Delta\varphi_{AB} + \Delta\varphi_{BC} + \Delta\varphi_{CD} + \Delta\varphi_{DE} = 55.4 \times 10^{-3}\,\text{rad} = 3.17\,\text{deg}$$
$$\varphi_D = \Delta\varphi_{AB} + \Delta\varphi_{BC} + \Delta\varphi_{CD} = 55.34 \times 10^{-3}\,\text{rad} = 3.17\,\text{deg}$$
$$\varphi_C = \Delta\varphi_{AB} + \Delta\varphi_{BC} = 39.47 \times 10^{-3}\,\text{rad} = 2.26\,\text{deg}$$
$$\varphi_B = \Delta\varphi_{AB} = 29.6 \times 10^{-3}\,\text{rad} = 1.70\,\text{deg}$$
$$\varphi_A = 0 \tag{4-17}$$

The angle of twist (φ_E) at the free end E includes the contributions from segments *AB*, *BC*, *CD* and null contribution from the torque-free segment (*DE*).

4.4 Power Transmission through a Circular Shaft

Power from a motor is transmitted through a circular shaft. The stress and deformation induced in the shaft can be calculated by relating power to torque. Power produced by a motor is rated in terms of shaft horsepower (shp) at a specified rotational speed (n). Power is defined as work done per unit time (1 hp = 550 ft-lbf/sec). The speed n can be measured in units of revolutions per minute (rpm) or revolutions per second (frequency, f), which is also called hertz (Hz). Speed (n) in rpm and frequency (f) in Hz are related as

$$f = \frac{n}{60} \tag{4-18a}$$

The motor torque (T^m) is related to horsepower and speed in rpm (and Hz) in the following formulas:

$$T^m = \frac{550\,\text{hp}}{2\pi f} \tag{4-18b}$$

$$T^m = \frac{33{,}000\,\text{hp}}{2\pi n} \tag{4-18c}$$

$$1\,\text{hp} = 550\,\text{ft-lbf/sec} = 746\ \text{watts} \tag{4-18d}$$

The derivation of the horsepower-torque formula can be found in standard physics textbooks. It relates horsepower and torque at a specified rotational speed (n in rpm or f in Hz). Equation (4-18) is sufficient to solve the torsion problem associated with the transmission of power through shaft.

EXAMPLE 4-5

Calculate the torque produced by a 40-hp motor at a frequency of $f = 20\,\text{Hz}$.

Solution

The torque from Eq. (4-18b) is

$$T^m = \frac{550 \times 40}{2\pi \times 20} = 175\,\text{ft-lbf} = 2.1\,\text{in.-k} \tag{4-19}$$

A shaft that is subjected to torque T^m can be analyzed using regular torsion theory.

EXAMPLE 4-6

A 50-hp motor at a speed of 20 Hz is driving two gears that are mounted on a steel shaft of radius $r = 3\,\text{in.}$ and length $\ell = 10\,\text{ft}$, as shown in Fig. 4-9a. The power consumed by gear A is twice that of gear B. Calculate the stress and deformation in the shaft neglecting the weight of the shaft and gears and the friction at bearing support C.

Solution

The analysis model of the shaft is shown in Fig. 4-9b. The frictionless bearing support at C offers no resistance to its twisting motion, and it need not be considered in the analysis model. The shaft horsepower (T^m) is obtained as

$$T^m = \frac{550 \times 50}{2\pi \times 20} = 219\,\text{ft-lbf} = 2.63\,\text{in.-k} \tag{4-20a}$$

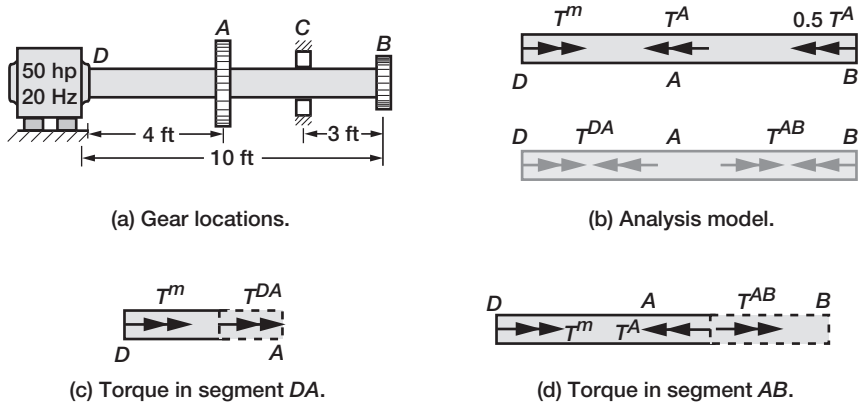

FIGURE 4-9 *Analysis of the gear-mounted shaft in Example 4-6.*

The motor torque shown in Fig. 4-9*b* is assumed positive and along the counter-clockwise direction. Let us assume torque from gear A to be $(-T^A)$ and from gear B as $(-0.5\ T^A)$. The EE of the model in Fig. 4-9*b* yields

$$T^m - T^A - 0.5T^A = 0$$
$$1.5T^A = 2.63$$
$$T^A = 1.75\,\text{in.-k} \tag{4-20b}$$

The internal torques (T^{DA} and T^{AC}) are marked in Fig. 4-9*b*. The EE of the segment DA in Fig. 4-9*c* yields

$$T^m + T^{DA} = 0 \tag{4-20c}$$
$$T^{DA} = -T^m = -2.63\,\text{in.-k}$$

Likewise, the EE of the segment BD in Fig. 4-9*d* yield

$$T^{AB} - T^A + T^m = 0$$
$$T^{AB} = 1.75 - 2.63 = -0.88\,\text{in.-k}$$

The polar moment of inertia and shear rigidity are

$$J = \frac{\pi}{2}3^4 = 127.23\,\text{in.}^4$$

$$G = 11{,}538\,\text{ksi (steel)}$$

$$JG = 1.468 \times 10^6\,\text{in.}^2\text{-k} \tag{4-20d}$$

The shear stresses in segments AB (τ^{AB}) and BC (τ^{BC}), are calculated from the torsion formula.

$$\tau^{DA} = \frac{T^{DA} r}{J} = -\frac{2630 \times 3}{127.23} = -62.0\,\text{psi} \tag{4-20e}$$

$$\tau^{AB} = \frac{T^{BC} r}{J} = -\frac{880 \times 3}{127.23} = -20.75\,\text{psi} \tag{4-20f}$$

The angles of twist in segments AB ($\Delta\varphi^{AB}$) and BC ($\Delta\varphi^{BC}$) are

$$\Delta\varphi^{DA} = \frac{T^{DA}\ell^{DA}}{JG} = -\frac{2.630}{1.468 \times 10^6} \times 4 \times 12 = -0.086 \times 10^{-3}\,\text{rad}$$

$$= -4.93 \times 10^{-3}\,\text{deg} \tag{4-20g}$$

$$\Delta\varphi^{AB} = \frac{T^{AB}\ell^{AB}}{JG} = -\frac{0.88 \times 6 \times 12}{1.468 \times 10^6} = -0.043 \times 10^3\,\text{rad} = -2.47 \times 10^{-3}\,\text{deg} \tag{4-20h}$$

The angles of twist φ_B at B and φ_A at A are as follows:

$$\varphi_B = \Delta\varphi^{DA} + \Delta\varphi^{AB} = -7.4 \times 10^{-3}\,\text{deg} \tag{4-20i}$$

$$\varphi_A = \Delta\varphi^{DA} = -4.93 \times 10^{-3}\,\text{deg} \tag{4-20j}$$

$$\varphi_D = 0 \tag{4-20k}$$

The angle of twist is zero near the motor, and it is maximum at the free end B.

Problems

Use the material properties given in Appendix 5 to solve the problems.

4-1 Verify the dimensional consistency of the torsion formulas in USCS base units by calculating the dimensions of the left and right variables. The definition of the variable is identical to that described in this chapter.

$$\text{Stress } \tau = \frac{Tr}{J}$$

$$\text{Strain } \gamma = \frac{Tr}{JG}$$

$$\text{Angle of twist } \varphi = \frac{T\ell}{JG}$$

4-2 A tubular aluminum shaft is subjected to a 1-kN force through a wrench as shown in Fig. P4-2. Calculate the torque, the variation of shear stress and shear strain along the radius, and the maximum angle of twist.

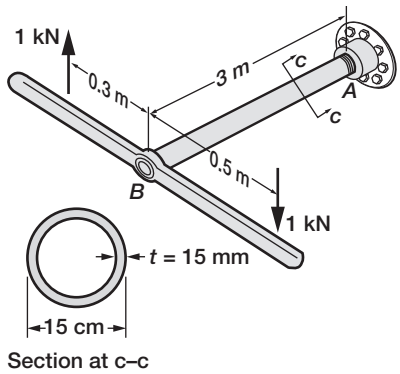

FIGURE P4-2

4-3 The cantilevered shaft shown in Fig. P4-3 has three segments, and it is subjected to two torque loads. Calculate the internal torque, maximum shear stress, and maximum angle of twist for the following two design cases:

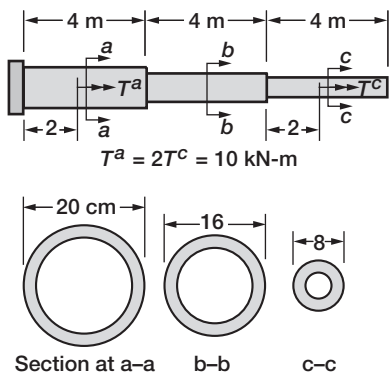

FIGURE P4-3

(a) The entire shaft is made of aluminum with a solid circular cross-section with diameter 14 cm.
(b) The shaft is made of three steel tubes with outer diameters as shown in the figure. Each tube is 12 mm thick.

4-4 A 40-hp motor at 20 Hz drives the two gears that are mounted at locations B and C along a solid steel shaft of diameter 4 in. as shown in Fig. P4-4. The support at D offers no resistance to twisting of the shaft. The gear at C requires three times more torque than the gear at B. Gear B has a counterclockwise motion while gear C moves in the opposite direction. Calculate the stress and angle of twist in each segment.

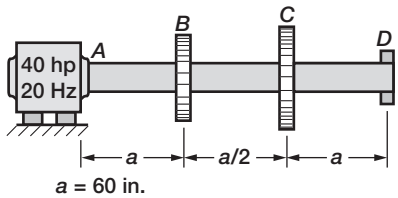

FIGURE P4-4

4-5 Two gears and shafts have the dimensions shown in Fig. P4-5. The solid shafts and the gears are made of steel.
(a) Calculate the torque in each gear in the unmated condition for circumferential displacements of s_1 and s_2, as marked in the figure.
(b) The gears are mated next. In this condition, the angle of twist at the circumference of the smaller gear was measured at $\varphi_1 = 0.2°$. Calculate the torque and angle of twist in each shaft.

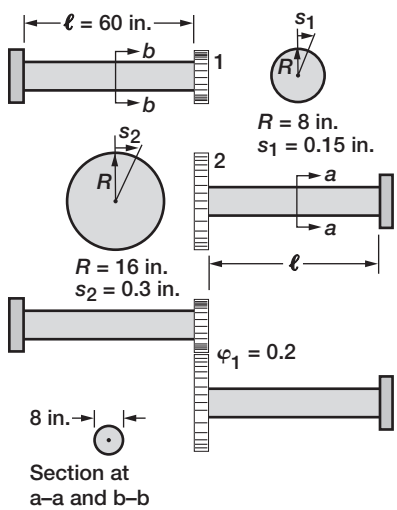

FIGURE P4-5

5 Simple Frames

Simple frames can be built as an assemblage of truss, beam, and shaft members. The frames can be analyzed for internal force, stress, and strain using the theory that has already been developed for the three types of members. Displacement analysis, when attempted through an extension of the formulas of the three member types, may become cumbersome, at least for some kind of frames. It can, however, be handled elegantly through energy theorems based on the internal energy and external work concepts, as discussed in Chapter 12. For simplicity, this chapter is confined to the calculation of force parameters. The displacement calculation will be examined in a subsequent chapter. The frame analysis requires no new theory, and it is illustrated through the solution of a set of typical examples. The analysis has four basic steps:

1. The frame is separated into two (or more) substructures. A substructure can be a truss, a beam, or a shaft. In other words, the frame is made of truss, beam, and shaft members.
2. The first substructure is analyzed for internal forces and reactions (also stress and strain) from the data given for the problem.
3. The analysis for the next substructure is set up using the reactions and forces determined for the first substructure, along with the data of the problem. The second substructure is solved, and the process is repeated for the remaining substructures.
4. The substructure results are combined to obtain the solution to the given problem.

EXAMPLE 5-1: A Support Frame

The aluminum frame shown in Fig. 5-1 supports a load ($P = 500$ lbf) at its free end A. It is fixed to the foundation at D and hinged at locations A, B, and C. The frame is built of three aluminum tubes whose dimensions are marked in Fig. 5-1. Analyze the frame.

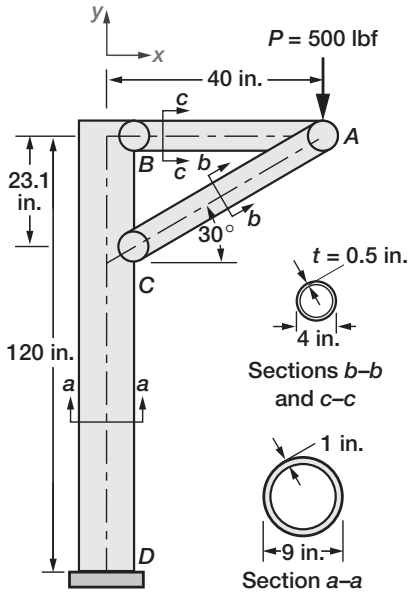

FIGURE 5-1 *Analysis of a support frame for Example 5-1.*

Solution

Step 1—Separate the Frame into Two Substructures, a Truss and a Beam

The truss, shown in Fig. 5-2*a*, is made of two bars (*AB* and *AC*), hinged at *A*, *B*, and *C*. Locations *B* and *C* are considered as supports. The beam *DCB* is shown in Fig. 5-2*b*.

Step 2—Analysis of the Truss (or the First Substructure)

The truss is analyzed for bar forces and the reactions at *B* and *C*, along with stress and strain. Two EE are written at node *A*, and their solution yields the two internal forces (F_{ba} and F_{ca}).

$$-F_{ba} - F_{ca}\cos 30 = 0$$
$$-F_{ca}\sin 30 - 500 = 0 \tag{5-1}$$

$$F_{ba} = 866\,\text{lbf}$$
$$F_{ca} = -1000\,\text{lbf} \tag{5-2}$$

The truss bar *BA* is in tension while bar *CA* is in compression. The four reactions (R_{bx}, R_{by}, R_{cx}, and R_{cy}), shown in Fig. 5-2*a* are back-calculated from EE written at *B* and *C* as

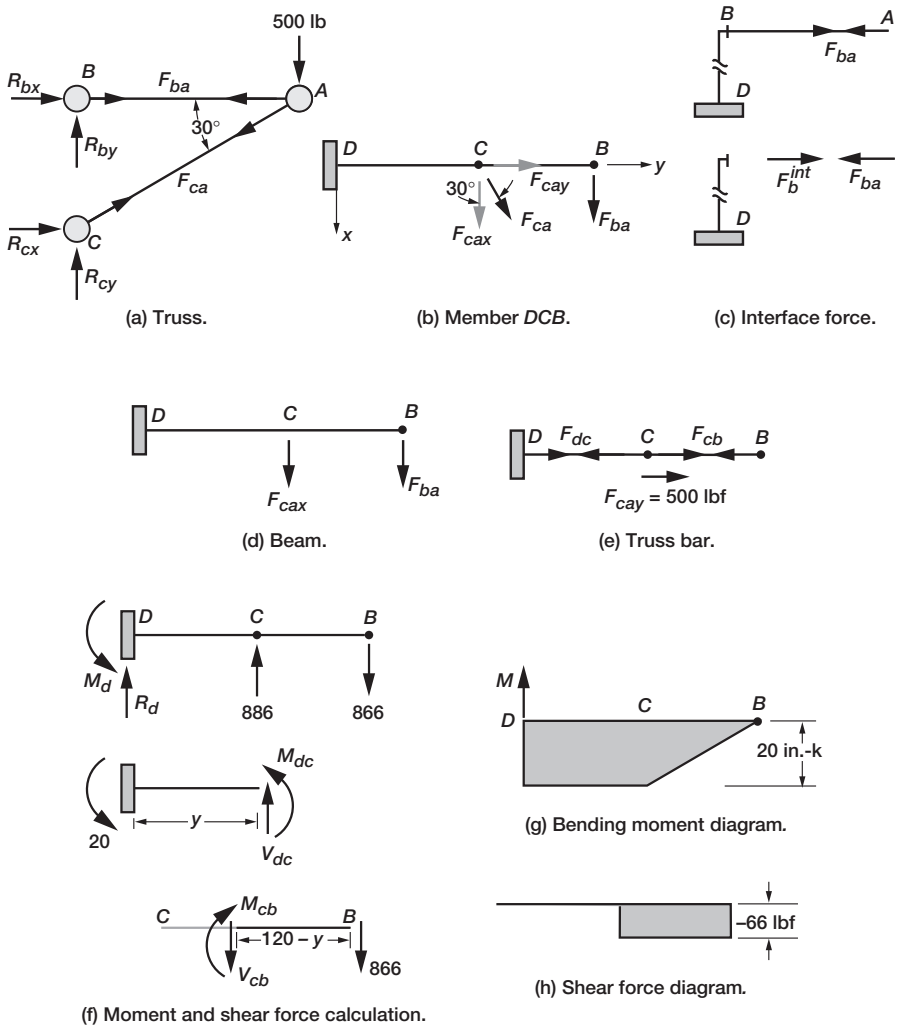

FIGURE 5-2 *Analysis of internal forces for Example 5-1.*

$$
\begin{aligned}
R_{bx} + F_{ba} &= 0 \\
R_{by} &= 0 \\
R_{cx} + F_{ca}\cos 30 &= 0 \\
R_{cy} + F_{ca}\sin 30 &= 0
\end{aligned}
\tag{5-3}
$$

$$
\begin{aligned}
R_{bx} &= -866\,\text{lbf} \\
R_{by} &= 0 \\
R_{cx} &= 866\,\text{lbf} \\
R_{cy} &= 500\,\text{lbf}
\end{aligned}
\tag{5-4}
$$

The vertical reaction (R_{by}) is zero because the connecting bar BA is horizontal.

Step 3—Analysis of Member DCB (or the Second Substructure)

The member DCB is shown in Fig. 5-2b with the y-coordinate axis positioned horizontally and the x-coordinate axis shown vertically down. This position is obtained by a 90° clockwise rigid body rotation that has no effect on the analysis. Member DBC interacts with the truss at locations B and C. The load is transferred to member DCB from the truss at these locations. The value of the load at B is calculated from the force interface diagram shown in Fig. 5-2c. The interface force (F_b^{int}) is obtained from the EE written at a cut in the bar BA close to B as

$$F_b^{\text{int}} - F_{ba} = 0$$
$$F_b^{\text{int}} = F_{ba} = 866\,\text{lb} \tag{5-5}$$

The interface force (F_b^{int}) is identical in magnitude to the bar force (F_{ba}), and its direction is that of the bar force at B for bar BA. It is also equal to the reaction in magnitude but acts in opposite direction.

Likewise, the interface force is applied at location C, as shown in Fig. 5-2b. At C, this force is equal to the bar force F_{ca} both in magnitude and direction. The interface force is resolved to obtain the components:

$$F_{cax} = F_{ca}\cos 30 = -866\,\text{lbf}$$
$$F_{cay} = F_{ca}\sin 30 = -500\,\text{lbf}$$

Member DBC is decomposed into a beam subjected to two transverse loads (F_{ba} and F_{cax}), as shown in Fig. 5-2d, and a truss bar subjected to an axial load (F_{cay}), as shown in Fig. 5-2e. The force response of member DBC is obtained by superposing the beam and truss solutions.

Step 3a—Analysis of the Beam

The beam DCB with loads is shown in Fig. 5-2f. The reactions R_d and M_d are obtained from the EE of the beam.

Moment EE at D:

$$M_d + DC\ 866 - DB\ 866 = 0$$
$$M_d = -96.9 \times 866 + 120(866) = 20\,\text{in.-k}$$

Transverse EE:

$$R_d + 866 - 866 = 0$$
$$R_d = 0 \tag{5-6a}$$

Forces in segment DC: The moment M_{dc} and shear force V_{dc} are obtained from EE of the free body of the segment DC as shown in Fig. 5-2f.

$$V_{dc} = 0$$
$$M_{dc} + M_d = 0$$
$$M_{dc} = -20 \tag{5-6b}$$

Likewise, the moment M_{cb} and shear force V_{cb} are calculated from the EE of segment *CB*, as shown in Fig. 5-2*f*.

$$-M_{cb} - 866(120 - y) = 0$$

$$M_{cb} = 866(y - 120)$$

$$-V_{cb} - 866 = 0$$

$$V_{cb} = -866$$

$$M_{cb_{\max}} = -20\,\text{kip}\ (\text{at}\ y = 96.9\,\text{in.}) \tag{5-6c}$$

The axial forces for segments *DC* and *CB* are obtained from equilibrium of forces in Fig. 5-2*e*.

Axial force in Segment DC:

$$F_{dc} = F_{cay} = -500\,\text{lb} \tag{5-6d}$$

Segment CB: There is no axial force

$$F_{cb} = 0 \tag{5-6e}$$

The bending moment and shear force diagrams constructed from Eq. (5-6*b* and 5-6*c*) are depicted in Figs. 5-2*g* and 5-2*h*, respectively. Moment is uniform in the segment *DC* and it has a linear variation in *CB*. The cross-sectional properties are not required to calculate forces and reactions.

Step 4—Stress and Strain Analysis

The calculation of stress and strain require the area, moment of area and moment of inertia of the members. These parameters follow.

Bar member AB and AC: Area of bar *AB* and *AC* (A_{ab} and A_{ac}), respectively, are calculated as

$$A_{ab} = \pi\left(r_0^2 - r_i^2\right)$$
$$r_0 = 4/2 = 2$$
$$r_i = 2 - 1/2 = 1.5$$
$$A_{ab} = \pi(4 - 2.25) = 5.5\,\text{in.}^2$$
$$A_{ac} = A_{ab} = 5.5\,\text{in.}^2 \tag{5-6f}$$

Beam Member BCD: The area (A_{bcd}), moment of area (Q_{bcd}) and moment of inertia (I_{bcd}) are

$$r_0 = 4.5 \quad \text{and} \quad r_i = 3.5$$

$$A_{bcd} = \pi\left(4.5^2 - 3.5^2\right) = 25.13\,\text{in.}^2$$

$$I_{bcd} = \frac{\pi}{4}\left(r_0^4 - r_i^4\right) = 204.20\,\text{in.}^4$$

$$Q_{bcd} = \frac{2}{3}\left(r_0^3 - r_i^3\right) = 32.17\,\text{in.}^3 \tag{5-6g}$$

In truss bar AB, the axial stress is obtained as the ratio of axial force to the bar area.

$$\sigma_{ab} = \frac{F_{ba}}{A_{ab}} = \frac{866}{5.5} = 157.5\,\text{psi} \tag{5-6h}$$

Strain in bar AB if required can be calculated as ($\varepsilon_{ab} = \frac{\sigma_{ab}}{E} = 0.016 \times 10^{-3}$)
In truss bar AC,

$$\sigma_{ac} = \frac{F_{ac}}{A_{ac}} = \frac{-1000}{5.5} = -181.8\,\text{psi} \tag{5-6i}$$

In member BCD, there is an axial force along span segment DC, but the segment CB has no axial force. The axial stress in segment DC is obtained as the ratio of the axial force to area as

$$\sigma_{cb}^a = 0$$

$$\sigma_{dc}^a = \frac{F_{dc}}{A_{bcd}} = \frac{-500}{25.13} = -19.9\,\text{psi} \tag{5-6j}$$

Member BCD is also subjected to bending moment and shear force. Both the bending stress (which is an axial stress) and shear stress are induced in this member. Bending stress changes along the beam depth. The flexural formula is applied to obtain the bending stress. In span segment DC, the bending stress at the outer fiber is

$$\sigma_{dc}^b = \left(\pm\frac{My}{I}\right)_{dc} = \pm\frac{20 \times 4.5}{204.2} = \pm 440.7\,\text{psi} \tag{5-6k}$$

The shear stress is zero in span DC because of the absence of shear force. The shear stress at any point in the span segment CB, calculated from the shear stress formula, is

$$\tau_{cb} = \left(\frac{VQ}{Ib}\right)_{CB} = \frac{-866 \times 32.17}{204.2 \times \{2 \times (r_0 - r_i)\}} = -68.2\,\text{psi} \tag{5-6l}$$

Concept of a Beam Column

The internal force in a truss bar can be either tensile or compressive. When a bar carries a predominantly tensile force, it is called a tensile strut or a tie whereas it is called a column when compression is the dominating force. A simple beam carries only the bending moment and the associated shear force. When a member carries both bending moment and axial force, along with the associated shear force, it is called a beam column or a frame number. We can calculate the internal forces (bending moment, axial force, and shear force) in a member disregarding their interaction. Finally, the stresses calculated from the internal forces are combined, which is the last step in frame analysis.

Step 5—Combined Stress

Consider the midspan of segment *DC*. The internal forces and stresses at this location are

$$F = F_{dc}^{a} = -500 \qquad \sigma_c^a = -19.9\,\text{psi}$$
$$M = -20\,\text{in.-k} \qquad \sigma^b = \pm 440.7\,\text{psi}$$

$$V = 0 \qquad \tau = 0$$
$$\sigma = \frac{F}{A} + \frac{My}{I} = -19.9 \pm 440.7\,\text{psi}$$
$$\tau = 0$$

Strain is obtained as the ratio of stress to the modulus.

$$\varepsilon = \frac{\sigma}{E} = (-0.002 \pm 0.044) \times 10^{-3} \tag{5-6m}$$

The annular cross-section and the axial stress distribution are shown in Fig. 5-3*a* and Fig. 5-3*b*, respectively. The axial stress is compressive ($\sigma = F/A = -19.9$ psi). The linearly varying flexural stress ($\sigma = My/I$) due to the bending moment is shown in Fig. 5-3*c*. The flexural stress is zero at the neutral axis, and it peaks at outer fibers ($r = \pm r_0$) at ($\sigma = \pm 440.7$ psi). Combined stress is obtained by adding the axial stress and the flexural stress ($\sigma = F/A + My/I$), as shown in Fig. 5-3*d*. The stress is relieved at ($r = -r_0$) to 421 psi in tension, but it is increased at $r = r_0$ to -460.7 psi in compression. This segment has no shear stress because of the absence of shear force.

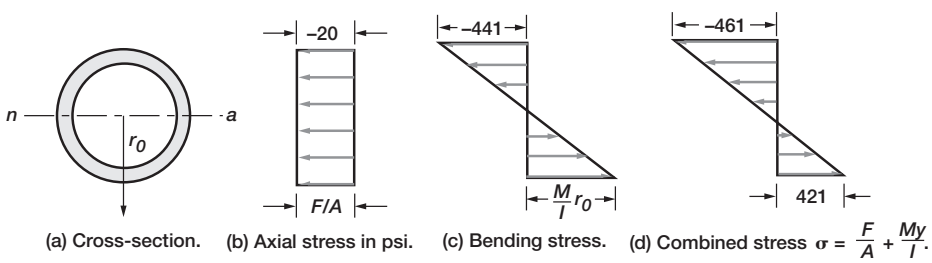

FIGURE 5-3 *Combined stress in psi for Example 5-1.*

EXAMPLE 5-2: L-Frame

The steel frame shown in Fig. 5-4, supports a load ($P = 1$ kip) at its free end A. It is fixed to the foundation at C. The dimensions are marked in the figure. Analyze the frame.

Solution

Step 1—The Frame Is Separated into Two Substructures

Beam BA is the first substructure and the beam column BC is the second, as shown in Fig. 5-4b.

Step 2—Analysis of the Beam BA

It is analyzed as a cantilever beam subjected to a concentrated load, as shown in Fig. 5-5a. The reactions at the support (M_R and R) are obtained as

$$M_R - 1 \times 60 = 0 \quad \text{or} \quad M_R = 60\,\text{in.-k}$$
$$R - 1 = 0 \quad \text{or} \quad R = 1\,\text{kip}$$

The EE at location x yields moment $M(x)$ and shear force $V(x)$

$$M(\text{x}) + M_R - xR = 0 \quad \text{or} \quad M(x) = x - 60$$
$$V(x) + R = 0 \quad \text{or} \quad V(x) = -1 \tag{5-7a}$$

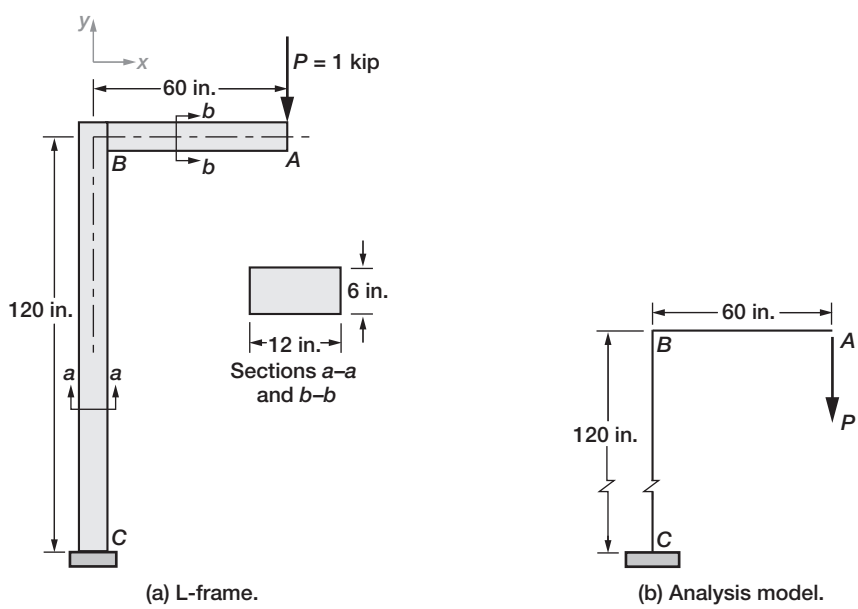

FIGURE 5-4 *Analysis of an L-frame for Example 5-2.*

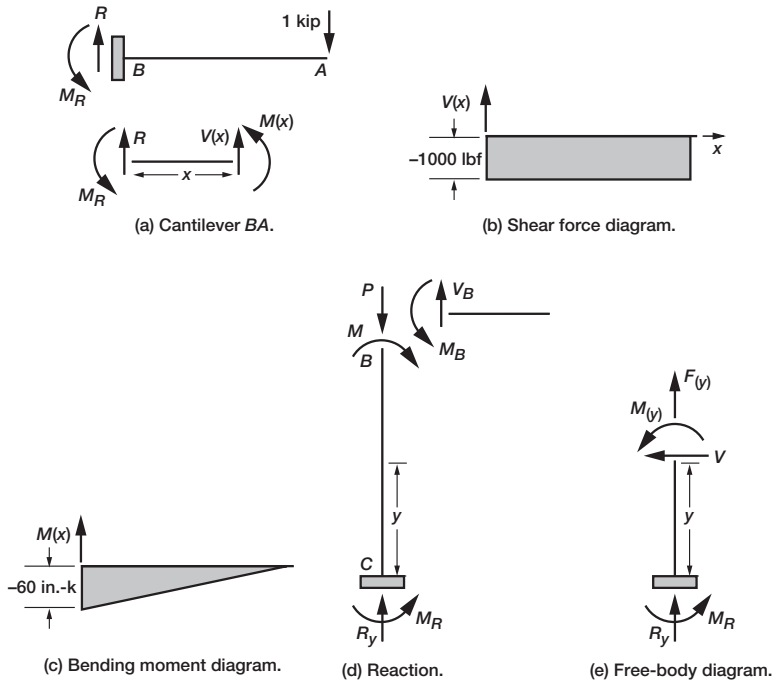

FIGURE 5-5 *Analysis of internal force for Example 5-2.*

The shear force ($V = -1000\,\text{lbf}$) is uniform across the span, as shown in Fig. 5-5*b*. The bending moment has a linear variation with a peak value of $M = -60\,\text{in.-k}$ at B, as shown in Fig. 5-5*c*.

Step 3—Analysis of the Beam-Column BC

The load on the beam-column is obtained from the reaction of the cantilever beam BA. The compressive axial load (P) and a bending moment (M) shown in Fig. 5-5*d* are as follows.

$$M = M_B = 60\,\text{in.-k}$$
$$P = V_B = 1\,\text{kip}$$

The beam reactions are

$$R_y = V_B = 1$$
$$R_x = 0$$
$$M_R = M = 60$$

The internal forces are obtained using the free body diagram shown in Fig. 5-5*e*.

$$\begin{aligned} \textit{Axial force:} \quad & F(y) = -R_y = -1\,\text{kip} \\ \textit{Shear force:} \quad & V(y) = 0 \\ \textit{Bending moment:} \quad & M(y) = -M_R = -60\,\text{in.-k} \end{aligned} \tag{5-7b}$$

The bending moment and the axial force are uniform across span BC. The beam has no shear force.

For the cantilever beam BA, the depth is ($d = 6$ in.) and the thickness is ($b = 12$ in.). Its area (A_{ba}), moment of inertia (I_{ba}), and first moment of area (Q_{ba}) are as follows:

$$\begin{aligned} A_{ba} &= 12 \times 6 = 72\,\text{in.}^2 \\ I_{ba} &= \frac{1}{12}bd^3 = \frac{1}{12} \times 12 \times 6^3 = 216\,\text{in.}^4 \\ Q_{ba} &= Q_{\text{neutral axis}} = \frac{bd^2}{8} = \frac{12 \times 6^2}{8} = 54\,\text{in.}^3 \end{aligned} \tag{5-7c}$$

For the beam column BC, the depth is ($d = 12$ in.) and the thickness is ($b = 6$ in.). Its area (A_{bc}), moment of inertia (I_{bc}), and first moment of area (Q_{bc}) are as follows:

$$\begin{aligned} A_{bc} &= 72\,\text{in.}^2 \\ I_{bc} &= \frac{1}{12}bd^3 = \frac{1}{12}6 \times 12^3 = 864\,\text{in.}^4 \\ Q_{bc} &= \frac{6 \times 12^2}{8} = 108\,\text{in.}^3 \end{aligned} \tag{5-7d}$$

Stress and strain are as follows:

Beam column *BA:*

$$\text{Axial force } (F = 0), \quad \sigma^a = 0$$

Shear force ($V = -1000$),

$$\tau = \frac{VQ}{Ib} = \frac{-1000 \times 54}{216 \times 12} = -20.83\,\text{psi}$$

$$\gamma = \frac{\tau}{G} = \frac{20.83}{11.54 \times 10^6} = -1.8 \times 10^{-6}$$

Bending moment ($M = -60{,}000$),

$$\sigma^b = \pm\frac{My}{I} = \pm\frac{60{,}000}{216} \times 3 = \pm 833.3\,\text{psi}$$

$$\varepsilon^b = \pm\frac{833.3}{30 \times 10^6} = \pm 27.7 \times 10^{-6}$$

Beam column BC:

$$\text{Axial force } (F = -1000), \quad \sigma^a = \frac{F}{A} = \frac{-1000}{72} = -13.9\,\text{psi}$$

$$\varepsilon^a = \frac{-13.9}{30 \times 10^6} = -4.6 \times 10^{-7}$$

$$\text{Shear force } (V = 0), \quad \tau = 0$$

$$\text{Bending moment } (M = -60{,}000), \quad \sigma^b = \pm\frac{60{,}000}{864} \times 6 = \pm 416.3\,\text{psi}$$

$$\varepsilon^b = \pm 13.8 \times 10^{-6} \tag{5-7e}$$

Step 4—Combined Stress

The stresses for the beam and the beam column are shown in Fig. 5-6. The bending moment ($M = -60$ in.-k) is the same for both the beam and the beam column. Both members have the same cross-sectional area ($A = 72$ in.^{2}), but the normal stress due to bending in the beam at $\sigma^b = 833.3$ psi, as shown in Fig. 5-6*c*, is twice that of the beam-column as $\sigma^b = 416.3$ psi, marked in Fig. 5-6*f*. This is because of the orientation of the cross-sectional area. The beam cross-section experiences the moment along its shorter (or weaker) side with a depth of 6 in. and a moment of inertia I of 216 in.^{4}. In contrast, the cross-section of the beam column experiences the moment along its longer (or stronger) side with a depth of 12 in. and a moment of inertia I of 864 in.^{4}.

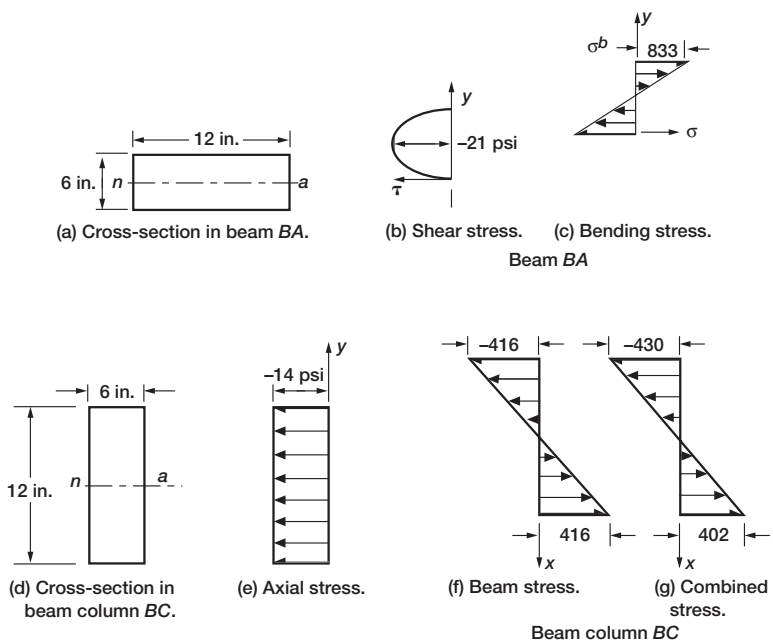

FIGURE 5-6 *Stress distribution for Example 5-2.*

In a beam, it is advantageous to orient the longer side of a rectangular cross-section along the bending moment.

The shear stress peaks at the neutral axis of the beam cross-section, as shown in Fig. 5-6*b*, where the bending stress is zero. The bending stress peaks at the outer fiber where the shear stress is zero.

Combined stress for the beam column is obtained by adding the axial stress to the bending stress. The compressive value of the normal stress is increased to (430.2 psi) while the tensile component is reduced to (402.4 psi), as shown in Fig. 5-6*g*.

EXAMPLE 5-3: L-Joint

This structure is made of a steel pipe with a stem and a rigid arm joined at 90°, as shown in Fig. 5-7*a*. The stem is built into a wall, and the arm supports a load. The steel stem of the L-joint is 60 in. long and has an annular cross-section with outer and inner radii at 3 and 2.5 in., respectively, as shown in Fig. 5-7*b*. The 36-in.-long rigid arm has a rectangular cross-section with a depth of 6 in. and a width of 2 in., as shown in Fig. 5-7*b*. The arm supports a gravity load ($P = 2$ kip). Analyze the L-joint.

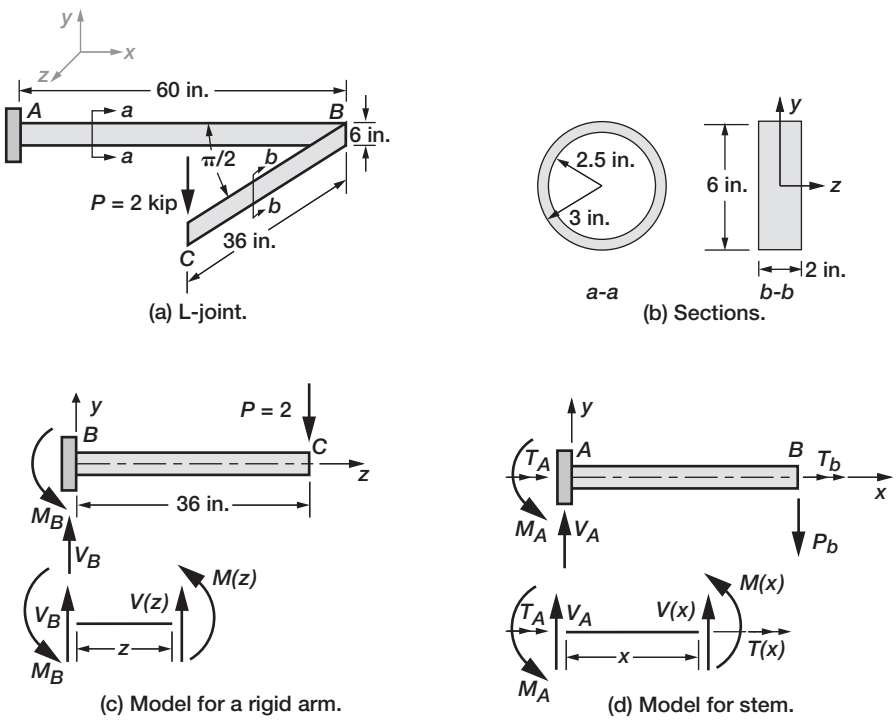

FIGURE 5-7 *Analysis of an L-joint for Example 5-3.*

Solution

Step 1—Idealizing the L-Joint into Two Substructures

The first substructure is the rigid arm BC in the y–z–coordinate plane, as shown in Fig. 5-7c. The beam axis is oriented along the positive z-coordinate direction, and the load $P = 2\,\text{kip}$ is applied along the negative y-coordinate direction at C.

The second substructure is the shaft AB in the x–y–coordinate plane, as shown in Fig. 5-7d. The transverse reaction from the arm is transferred as a load inducing bending in the member AB. The reactive bending moment from the arm is transferred as torque. The shaft, in other words, is subjected to combined bending and torque loads.

Step 2—Analysis of the Rigid Arm

The arm is analyzed as a cantilever beam subjected to a concentrated load as shown in Fig. 5-7c. The reactive moments (M_B) and shear force (V_B), marked in the figure are determined from the moment and transverse EE.

$$
\begin{aligned}
&M_B - 36P = 0\\
&M_B = 72\,\text{in.-k}\\
&V_B - P = 0\\
&V_B = P = 2\,\text{kip}\\
&V(z) = -V_B = -2\\
&M(z) = -72 + 2z \qquad (5\text{-}8a)
\end{aligned}
$$

The shear force ($V(x) = -2\,\text{kip}$) is uniform across the span, and the bending moment has a linear variation with a peak of $M_B = -72\,\text{in.-k}$ at B, as shown in Fig. 5-8a. The arm experiences bending moment and shear force even though it is

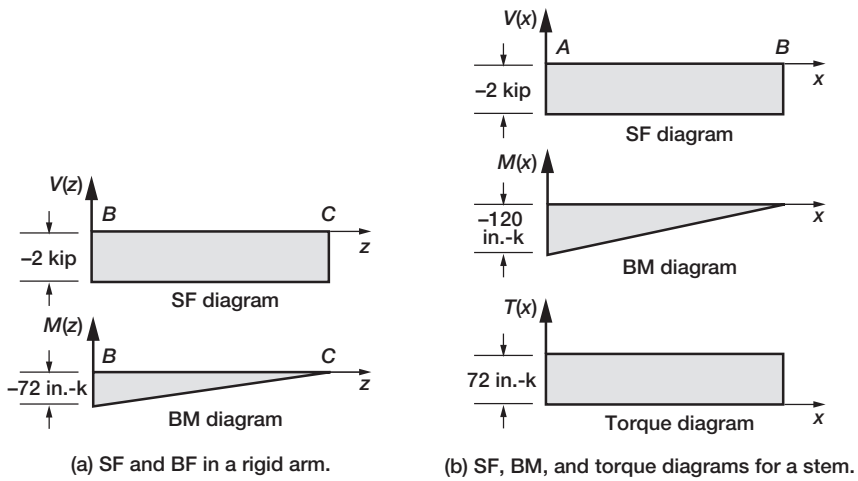

FIGURE 5-8 *Analysis of internal forces for Example 5-3.*

rigid because the internal forces in a determinate structure are independent of the material. The bending moment and shear force cannot deform the rigid member; thus, no strain or stress is induced.

Step 3—Analysis of the Steel Stem

The load in the stem is calculated from the reaction at B. The stem is subjected to a torque (T_b) and load (P_b), as shown in Fig. 5-7d.

$$P_b = V_B = 2\,\text{kip}$$
$$T_b = M_b = 72\,\text{in.-k} \tag{5-8b}$$

The load is equal to the applied load ($P_b = 2\,\text{kip}$) and it acts along the negative y direction. The moment from the arm is transferred to the stem as a torque ($T_b = 72\,\text{in.-k}$) along the positive direction. The member is analyzed as a cantilever beam and as a shaft. The stress and strain in the beam and the shaft can be calculated independent of each other because they do not interact.

The reactions are calculated by observation of the forces marked in Fig. 5-7d. The reactive torque is ($T_A = -T_b = -72\,\text{in.-k.}$); moment is ($M_A = 60\,P_b = 120\,\text{in.-k}$) and the transverse reaction is ($V_A = P_b = 2\,\text{kip}$).

$$V_A - P_b = 0$$
$$V_A = P_b = 2\,\text{kip}$$
$$M_A - 60\,P_b = 0$$
$$M_A = 120\,\text{in.-k}$$
$$T_A + T_b = 0$$
$$T_A = -T_b = -72\,\text{in.-k} \tag{5-8c}$$

The shear force, bending moment, and torque at a location x in the stem, shown in Fig. 5-7d are as follows:

$$V(x) = -V_A = -2\,\text{kip}$$
$$M(x) + M_A - xV_A = 0$$
$$M(x) = -120 + 2x$$
$$T(x) = -T_A = 72\,\text{in.-k} \tag{5-8d}$$

The shear force and torque are uniform across the span, whereas the bending moment has a linear variation, as shown in Fig. 5-8b.

Step 4—Stress and Strain

At location A on the shaft, the bending stress (σ_x) and associated shear stress (τ_{xy}), and the stress associated with the torsion (τ_{xz}) are calculated from the flexure and torsion formulas.

The bending moment induces normal stress (σ_x), and there is no other normal stress induced in the x-coordinate direction. The shear stress (τ) due to the shear force (V) more appropriately should be written with two subscripts (x and y) as $\tau = \tau_{xy}$. The first subscript (x) indicates that the cross-section is normal to the x-coordinate axis, whereas the second subscript indicates that its direction is along the y-coordinate axis. The shear stress (τ) due to the torque (T) should also be written with two subscripts (x and z) as $\tau = \tau_{xz}$. The first subscript (x) indicates that the cross-section is normal to the x-coordinate axis, whereas the second subscript indicates that its direction is along the z-coordinate axis, because the torque is in the y–z plane. The two shear stresses (τ_{xy} and τ_{xz}), which have the same normal but different directions, cannot be added in a straightforward manner because stress is a tensor. Stress, however, can be combined through formula discussed in Chapter 10.

At location A on the shaft, the bending stress (σ_x) associated and shear stress (τ_{xy}), and the stress associated with the torsion (τ_{xz}) are calculated from the flexure and torsion formulas.

$$I_{ab} = \frac{\pi}{4}\left(r_0^4 - r_i^4\right) = 32.94\,\text{in.}^4$$

$$Q_{ab} = \frac{2}{3}\left(r_0^3 - r_i^3\right) = 7.58\,\text{in.}^3$$

$$J_{ab} = \frac{\pi}{2}\left(r_0^4 - r_i^4\right) = 65.88\,\text{in.}^4$$

$$\sigma_x = \pm\frac{M_A r_0}{I_{ab}} = \pm\frac{120 \times 3}{32.94} = \pm 10.93\,\text{ksi}$$

$$\varepsilon_x = \frac{\sigma_x}{E} = \frac{10.93}{30 \times 10^3} = 0.36 \times 10^{-3}$$

$$\tau_{xy} = \frac{V_A Q_{ab}}{I_{ab} b} = \frac{-2 \times 7.58}{32.94\{2(r_0 - r_i) = 1\}} = -0.46\,\text{ksi}$$

$$\varepsilon_{xy} = \frac{\tau_{xy}}{G} = \frac{-0.46}{11.54 \times 10^3} = -4.0 \times 10^{-5}$$

$$\tau_{xz} = \frac{T_a r_0}{J_{ab}} = \frac{72 \times 3}{65.88} = 3.28\,\text{ksi}$$

$$\gamma_{xz} = \frac{\tau_{xz}}{G} = \frac{3.28}{11.54 \times 10^3} = 0.28 \times 10^{-3} \tag{5-9}$$

There is no interaction between the shear stress components because τ_{xy} (directed along y) and τ_{xz} (directed along z) have different orientations.

EXAMPLE 5-4: Leaning Column

A tower made of reinforced concrete, for a preliminary estimation, is modeled as a stepped column, as shown in Fig. 5-9*a*. After construction, it developed a 5° tilt to the vertical, as shown in Fig. 5-9*b*. Calculate the stress at the foundation level for the two positions.

Solution

The top structure is modeled as a cylindrical column with a diameter of 50 ft and a height of 250 ft. The bottom structure, also modeled as a cylindrical column, has a diameter of 100 ft and a height of 200 ft. In the leaning position, the column is off-centered from the vertical (y-coordinate axis) by 5°. The crushing around the toe at $c^1 - c^1$, as shown in Fig. 9-9*b*, is neglected. The weights of the structures are lumped at their centers of gravity. The weight density of reinforced concrete is assumed to be $\rho_c = 145\,\text{lbf/ft}^3$ with Young's modulus $E_c = 3500\,\text{ksi}$.

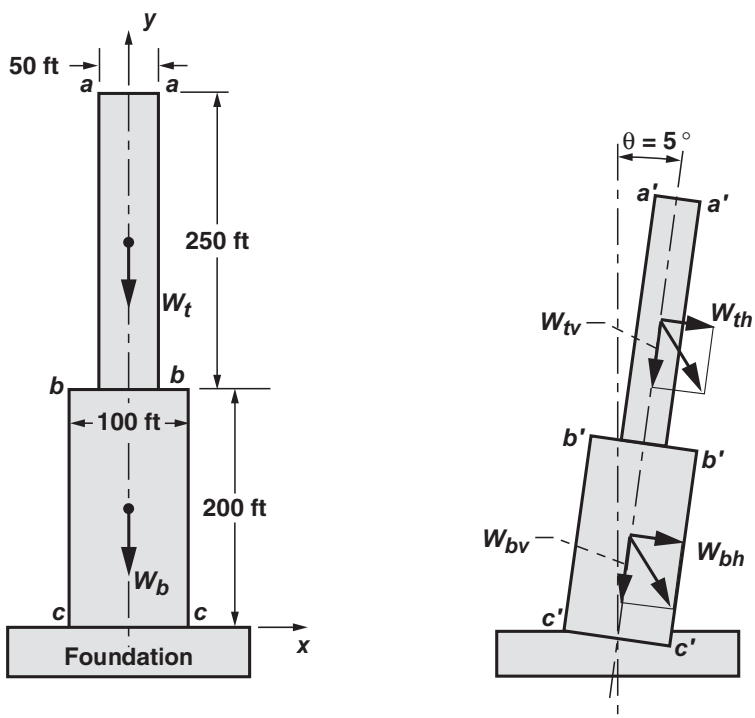

(a) Original structure. (b) Inclined structure.

FIGURE 5-9 *Leaning column for Example 5-4.*

The weight of the columns and their cross-sectional properties are as follows.

Weight of top column (W_t):

$$W_t = (\pi r^2)h\rho_c = \pi \times 25^2 \times 250 \times 145 = 71.2 \times 10^6\,\text{lbf} = 71.2 \times 10^3\,\text{kip}$$

Weight of bottom column (W_b) :

$$W_b = \pi \times 50^2 \times 200 \times 145 = 228 \times 10^6\,\text{lbf} = 228 \times 10^3\,\text{kip}$$

The tilted top-column weight component along original y-axis:

$$W_{tv} = W_t \cos 5^\circ = 71 \times 10^3\,\text{kip}$$

The weight component along the original x-axis:

$$W_{th} = W_t \sin 5^\circ = 6.2 \times 10^3\,\text{kip}$$

The tilted bottom-column weight component along the original y-axis :

$$W_{bv} = W_b \cos 5^\circ = 227.1 \times 10^3\,\text{kip}$$

The weight components along the original x-axis :

$$W_{bh} = W_b \sin 5^\circ = 19.9 \times 10^3\,\text{kip}$$

Area of bottom column:

$$A_b = \pi \times 50^2 = 7854\,\text{ft}^2$$

Moment of inertia for the bottom column:

$$I_b = \frac{\pi}{4} \times 50^4 = 4.91 \times 10^6\,\text{ft}^3$$

First moment of area about diameter for bottom column:

$$Q_b = \frac{2}{3} \times 50^3 = 83.3 \times 10^3\,\text{ft}^3 \tag{5-10}$$

Compressive stress: In the original configuration the compressive stress at $c-c$, which is uniform across the base area, is obtained as the ratio of weight to area.

$$\sigma^{ao} = \frac{-(Wt + W_b)}{A_b} = \frac{-(71.2 + 22.8) \times 10^3}{7854} = -38.1\,\text{kip/ft}^2 = -264.6\,\text{psi}$$

In the inclined condition, the stress has two components. The axial component is obtained as the ratio of the axial load to the base area. The second component is due to the bending moment.

The axial component is:

$$\sigma^{ai} = \frac{-(W_{tv} + W_{bv})}{A_b} = \frac{-(70.1 + 227.1) \times 10^3}{7854} = -37.8\,\text{kip/ft}^2 = -262.8\,\text{psi}$$

Moment (M^i) at the base for the inclined position:

$$M_i = W_{th}(200 + 125) + W_{bh}(100)$$
$$M_i = 100(3.25 \times 6.2 + 19.9) \times 10^3 = 4006 \times 10^3\,\text{ft-k}$$

Bendingstress (σ^{bi}):

$$\sigma^{bi} = \pm\frac{M_i y}{I} = \pm\frac{4.006 \times 10^6 \times 50}{4.91 \times 10^6} = \pm 40.8\,\text{kip/ft}^2 = \pm 283.3\,\text{psi}$$

Shear stress at the center of the base:
Shear force

$$V = W_{th} + W_{bh} = 26.1 \times 10^3\,\text{kip}$$

Shear stress

$$\tau^i = \frac{VQ_b}{I_b b} = \frac{26.1 \times 10^3 \times 83.3 \times 10^3}{4.91 \times 10^6 \times 100} = 4.43\,\text{kip/ft}^2 = 30.1\,\text{psi} \quad (5\text{-}11a)$$

Combined stress in the inclined position at $c^1 - c^1$ is obtained from the formula:

$$\left(\sigma = \frac{F}{A} \mp \frac{My}{I}\right)$$
$$\sigma^{\max} = \sigma^{ai} + \sigma^{bi} = -262.8 - 283.3 = -546.1\,\text{psi}$$
$$\sigma^{\min} = -262.8 + 283.3 = 20.5\,\text{psi} \quad (5\text{-}11b)$$

At the foundation level, the tensile stress is 20.5 psi. The stability of the structure cannot be assured because the stress is tensile.

EXAMPLE 5-5: Galileo's Problem

The beginning of strength of materials is credited to Galileo (1564–1642). One of his problems relating to strength and resistance is discussed in this example (see his cantilever experimental setup in Fig. 1-37). His puzzle is explained in the following quotation:

> *SAGREDO: I am more puzzled . . . the strength of resistance against breaking increases in a larger ratio than the amount of material. Thus, for instance, if two nails be driven into a wall, the one which is twice as big as the other will support not only twice as much weight as the other, but three or four times as much.*

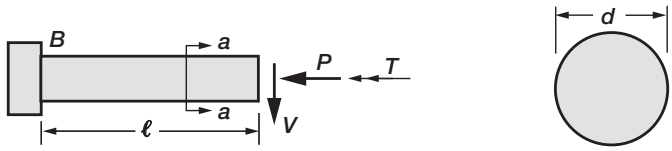

(a) Cantilever beam. (b) Section at *a–a.*

FIGURE 5-10 *Galileo's problem for Example 5-5.*

> *. . . this problem of resistance opens up a field of beautiful and useful ideas . . . (circa 1638; Galileo, G.,* Dialogue Concerning Two New Sciences. *Northern University Press, Illinois, 1950)*

The problem is illustrated through a steel cantilever beam that resembles Galileo's nail (see Fig. 1-37) of length ℓ and a uniform circular cross-section with diameter d, as shown in Fig. 5-10. The resistance is obtained in closed form separately for a normal load (P), a transverse load (V), and a torque (T). It is assumed that the yield strength of steel is $\sigma_y = 36$ ksi. The resistance under normal stress is considered to be equal to the yield strength ($\sigma_0 = \sigma_y = 36$ ksi), and the shear strength is assumed to be half the yield strength ($\tau_0 = \sigma_y/2 = 18$ ksi). The resistance is defined as the load when the maximum normal stress is equal to the strength ($\sigma_{max} = \sigma_0 = 36$ ksi) or as the load under shear when ($\tau_{max} = \tau_0 = \sigma_0/2 = 18$ ksi).

Solution

The parameters of the beam are as follows:

$$\text{Area of beam:} \quad A = \frac{\pi d^2}{4}$$

$$\text{Volume:} \quad V = A\ell$$

$$\text{Moment of area about neutral axis:} \quad Q = \frac{d^3}{12}$$

$$\text{Moment of inertia:} \quad I = \frac{\pi d^4}{64}$$

$$\text{Polar moment of inertia:} \quad J = \frac{\pi d^4}{32}$$

The axial stress, normal stress in bending, shear stress in bending, and shear stress in torsion are as follows:

$$\text{Axial stress:} \quad \sigma^b_{\max} = \frac{P}{A} = \frac{4P}{\pi d^2}$$

$$\text{Normal bending stress } for\ (M = V\ell): \quad \sigma^b_{\max} = \frac{My}{I} = \frac{32V\ell}{\pi d^3}$$

$$\text{Shear stress in bending:} \quad \tau^b_{\max} = \frac{VQ}{Ib} = \frac{16}{3}\frac{V}{d^2}$$

$$\text{Shear stress due to torque } (T): \quad \tau^T_{\max} = \frac{Tr}{J} = \frac{16T}{\pi d^3} \tag{5-13}$$

The resistance to the different types of load are calculated by equating stress to strength.

Resistance to axial load:

$$\sigma^a_{\max} = \sigma_0 = \frac{4P}{\pi d^2}$$

$$P = \frac{\pi\sigma_0}{4} d^2 = \sigma_0 A \tag{5-14a}$$

Resistance to flexural load:

$$\sigma^a_{\max} = \sigma_0 = \frac{32\,V\ell}{\pi d^3}$$

$$V = \frac{\pi\sigma_0}{32\ell} d^3 = \frac{\sigma_0 A\sqrt{A}}{4\ell\sqrt{\pi}} \tag{5-14b}$$

Shear resistance to flexural load:

$$\tau^b_{\max} = \tau_0 = \frac{\sigma_0}{2} = \frac{16\,V}{3d^2}$$

$$V = \frac{3}{32} d^2\sigma_0 = \frac{3}{8\pi}\sigma_0 A \tag{5-14c}$$

Resistance to torque load:

$$\tau^T_{\max} = \tau_0 = \frac{\sigma_0}{2} = \frac{16\,T}{\pi d^3}$$

$$T = \frac{\pi}{32}\sigma_0 d^3 = \frac{\sigma_0}{4\sqrt{\pi}} A\sqrt{A} \tag{5-14d}$$

For an axial load, the resistance is proportional to the area, see Eq. (5-14*a*). The load capacity of a bar with a 1-in.^{2} cross-sectional area is 36 kip, and it increases to 72 kip when the area doubles to 2 in.^{2}. Galileo presumed to have known the bar capacity for axial load.

For transverse load, the resistance in flexure is proportional to the 3/2 power of the area, see Eq. (5-14*b*). The load-carrying capacity for a 1-ft-long bar with a 1-in.^{2} cross-section (and 12 in.^{3} volume) is $V = 0.423$ kip, but it increases to $V = 1.20$ kip when the area is doubled to 2 in.^{2} (with volume at 24 in.^{3}), representing a 2.83-fold increase in the load-carrying capacity. Galileo's observation—3 or 4 times, but not 8 times—is in the correct range because a cantilever typically fails in flexure.

For a transverse load, the resistance in shear is proportional to the area, see Eq. (5-14*c*). The load-carrying capacity for a bar with a 1-in.^{2} cross-section is $V = 4.3$ kip, and it increases to $V = 8.6$ kip when the area is doubled at 2 in.^{2}.

For a torsion load, the resistance in shear is proportional to the 3/2 power of area (see Eq. (5-14*d*)). The torque-carrying capacity for a bar with a 1-in.^{2} cross-section is $T = 5.08$ in.-k, but it increases to $T = 14.36$ in.-k when the area is doubled to 2 in.^{2}, representing a 2.83-fold increase in the load-carrying capacity.

The load-carrying capacity of the bar with a 1-in.^{2} cross-sectional area is the least of the four values: (36 kip, 0.423 kip, 4.3 kip, or 5.08 in.-k in torsion). The failure in flexure dominated the other three types of failure modes.

Problems

Use the material properties given in Appendix 5 to solve the problems.

5-1 A square balcony support frame made of steel is shown in Fig. P5-1. Assume that the beam *CB* is simply supported on the cantilever beams *AB* and *DC*. Calculate the internal force, stress and strain in each of the three members of the frame. Use the following

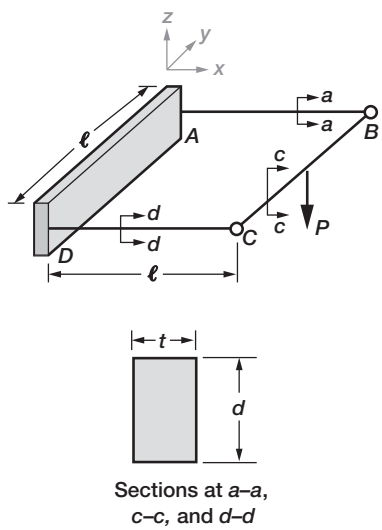

FIGURE P5-1

values for: length $\ell = 2$ m, depth $d = 30$ cm, thickness $t = 15$ cm. A ten kN load ($P = 10$ kN) is applied at the beam center.

5-2 The post (ABE) supports a truss ($ABDC$), which carries a load (P) as shown in Fig. P5-2. Consider hinge connections at A, B, C, and D and a fixed condition at E. The truss bars are made of aluminum, and the post is made of steel. Analyze the structure for the following values of the parameters: length $a = 4$ ft and load $P = 1$ kip. The truss bars are tubular with outer and inner radii of $r_0 = 4$ in. and $r_i = 3.5$ in., respectively. The post has an annular section with outer and inner depths of $d_0 = 8$ in. and $d_i = 7$ in., and inner and outer thickness of $t_0 = 4$ in. and $t_i = 3.5$ in.

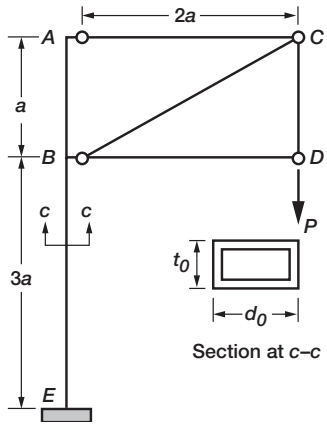

FIGURE P5-2

5-3 The steel u-frame shown in Fig. P5-3 can be used to construct a shed. Considering a triangular reactive pressure distribution at the foundation, calculate the response of the

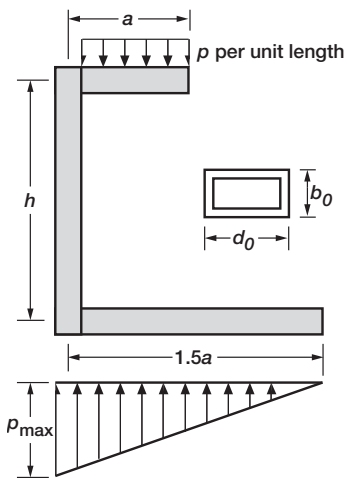

FIGURE P5-3

frame for the following parameters: length $a = 2$ m, height h $= 3$ m, and load $p = 1$ kN/m. The frame is made of annular section with outer and inner dimensions of $d_0 = 20$ cm, $d_i = 18$ cm., $b_0 = 10$ cm, and $b_i = 9$ cm.

5-4 The steel L-frame shown in Fig. P5-4 supports a mass (m_0). The mass swings in the x–z plane. For a swing angle ($\theta = 15^0$), calculate the response of the frame for the following parameters: lengths, $a = 8$ ft, $b = 4$ ft, and $c = 6$ ft, and mass $m_0 = 2$ slug. The frame is made of a solid circular cross-section with a 4-in. radius.

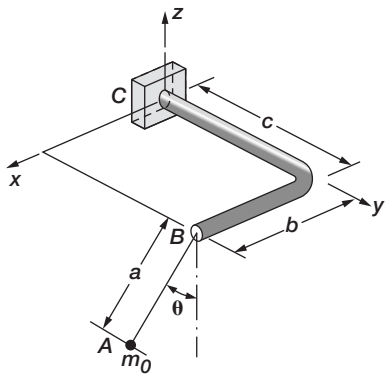

FIGURE P5-4

6 Indeterminate Truss

An indeterminate truss is obtained by adding extra bars to a determinate truss, by increasing the number of support restraints, or both. The extra bars and restraints are referred to as redundant members and redundant support conditions, respectively. An indeterminate truss remains stable even when some or all of the redundant bars or restraints are removed. In contrast, a determinate truss will collapse when a single bar or a support restraint is eliminated. An indeterminate truss is preferred because of its stability and the increased strength that emerge from the redundant members. Temperature and support settling induce stress in an indeterminate truss but not in a determinate truss. The analysis of an indeterminate truss requires all three sets of equations of determinate analysis, along with an additional set of constraints called the compatibility conditions:

1. Equilibrium equations (EE)
2. Deformation displacement relations (DDR)
3. Force deformation relations (FDR)
4. Compatibility conditions (CC)

Any indeterminate truss (or a structure like a beam, a frame, or a shaft) can be analyzed through an application of the four types of equations: EE, DDR, CC, and FDR. The types of response variables are not increased between determinate and indeterminate analysis. They remain the same: namely, bar forces $\{F\}$, reactions $\{R\}$, nodal displacements $\{X\}$, bar deformations $\{\beta\}$, stress (σ), and strain (ε). Their individual numbers can increase; for example, the number of bar forces increases between determinate and indeterminate trusses, and this is specified through the term referred to as "the degree of indeterminacy."

The degree of indeterminacy is illustrated by considering a general two-dimensional truss with the following parameters:

m_d total number of nodes, including the support nodes
n_F number of bar forces, or bars (n) in the truss ($n = n_F$)
n_R number of support restraints, which is also equal to the number of reactions
$m = (2m_d - n_R)$; number of displacement components

The degree of indeterminacy (r) of the truss is equal to the sum of the bar forces and the reactions ($n_F + n_R$) less twice the number of nodes ($2m_d$).

$$r = n_F + n_R - 2m_d \tag{6-1a}$$

Equation (6-1a) is rearranged to obtain a simpler form:

$$r = n - m = (n_F = n) - \{(2m_d - n_R) = m\} \tag{6-1b}$$

The indeterminacy is equal to the difference in the number of internal forces (n) and the number of displacement components. If $r = 0$, then the truss is determinate. If $r < 0$, then it is a mechanism. Our treatment is confined to the analysis of determinate and indeterminate trusses. The truss shown in Fig. 6-1a has four nodes ($m_d = 4$), five bars ($n_F = 5$), and three reactions ($n_R = 3$). Its degree of indeterminacy is zero ($r = 5 + 3 - 8 = 0$), or it is a determinate truss. The truss shown in Fig. 6-1b has four nodes ($m_d = 4$), six bars ($n_F = 6$), and four reactions ($n_R = 4$). It is a two-degree indeterminate truss ($r = 6 + 4 - 8 = 2$). The truss shown in Fig. 6-2 has 12 nodes ($m_d = 12$), 26 bars ($n_F = 26$), and 5 reactions ($n_R = 5$). Its degree of indeterminacy is seven ($r = 26 + 5 - 24 = 7$). The degree of indeterminacy increases to nine ($r = 26 + 7 - 24 = 9$) when node 10 is also restrained in both the x- and y-coordinate directions.

Engineers often separate indeterminacy (r) into external indeterminacy (r_e) and internal indeterminacy (r_i): $r = r_e + r_i$. External indeterminacy pertains to the support restraints,

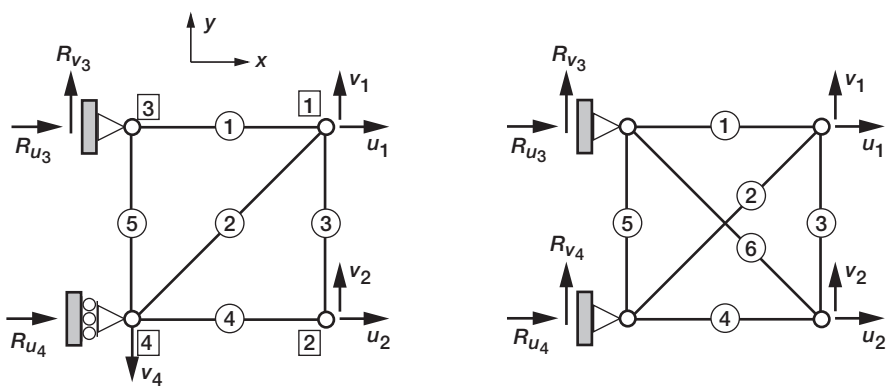

(a) Determinate truss. (b) Indeterminate truss.

FIGURE 6-1 *Examples of determinate and indeterminate trusses.*

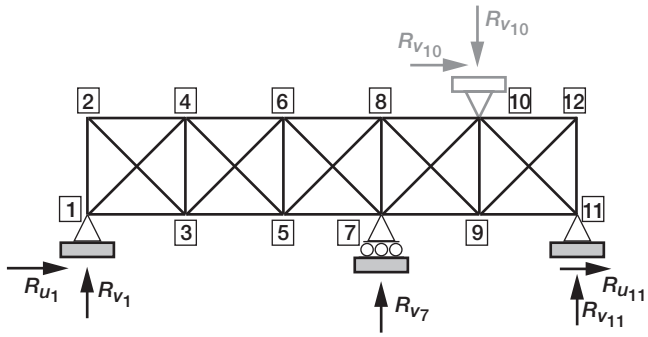

FIGURE 6-2 *Twenty-six–bar truss.*

whereas internal indeterminacy is associated with the number of bars in the truss. The amount of external indeterminacy is equal to the number of support restraints in excess of three.

$$r_e = n_R - 3 \quad = \quad (r - r_i) \tag{6-1c}$$

The truss shown in Fig. 6-1*a* has three support restraints. Therefore, its degree of external indeterminacy is zero ($r_e = n_R - 3 = 0$), or it is externally determinate. The three reactions of the truss can be determined from the EE of the truss. The truss shown in Fig. 6-1*b* has four restraints and the same number of reactions. Its degree of external indeterminacy is one ($r_e = 4 - 3 = 1$). The truss shown in Fig. 6-2 has five restraints, and its degree of external indeterminacy is two ($r_e = 5 - 3 = 2$). The degree of external indeterminacy is increased to four when node 10 is fully restrained ($r_e = 7 - 3 = 4$).

The internal indeterminacy can be calculated from the following formula:

$$r_i = n_F + 3 - 2m_d = (r - r_e) \tag{6-1d}$$

The addition of Eqs. (6-1*c*) and (6-1*d*) yields Eq. (6-1*a*): ($r = r_e + r_i$). The truss shown in Fig. 6-1*a* has no internal indeterminacy because $r_i = 5 + 3 - 8 = 0$. The truss shown in Fig. 6-1*b* is one-degree indeterminate ($r_i = 6 + 3 - 8 = 1$). The truss shown in Fig. 6-2 has five degrees of internal indeterminacy ($r_i = 26 + 3 - 24 = 5$). The degree of internal indeterminacy does not increase when node 10 is restrained.

A determinate truss is zero-degree indeterminate internally and zero-degree indeterminate externally. An indeterminate truss can be indeterminate internally, externally, or both. The degree of indeterminacy is independent of the external loads and the material properties of the truss. The analysis equations are different for the determinate and indeterminate trusses. The differences pertain to the number of equations, rather than to the underlying concepts. The differences are discussed for the equilibrium equations, deformation displacement relations, and the force deformation relations. The additional equations, referred to as the compatibility conditions, are then discussed.

EXAMPLE 6-1

The nature of the equations of indeterminate analysis is discussed by considering the six-bar truss shown in Fig. 6-3 as an example. It is made of aluminum with a Young's modulus E of 10×10^3 ksi and a coefficient of thermal expansion (α) of 6.0×10^{-6} per °F. It has six bars ($n_F = n = 6$), four nodes ($m_d = 4$), and four reactions ($n_R = 4$). It has four displacements ($m = 4$). The cross-sectional areas of members 1, 3, 5, and 6 are 1 in.^{2} and those of members 2 and 4 are $\sqrt{2}/2$. The truss has to be analyzed for the following three load cases:

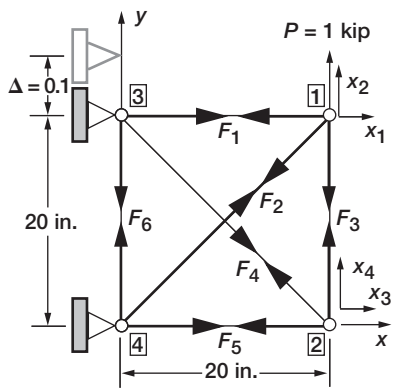

FIGURE 6-3 *Six-bar truss.*

Load Case 1: Mechanical load $P = 1$ kip at node 1 along the y-coordinate direction.
Load Case 2: The temperature increases ($\Delta T = 100$ °F) for member 3 only.
Load Case 3: Support 3 settles along the y-coordinate direction by 0.1 in.

For simplicity, we will begin the discussion with the mechanical load and then proceed to the other two load cases.

6.1 Equilibrium Equations

The equilibrium equations are written at each truss node along the direction of free displacement. We avoid writing the EE along the restrained displacement directions. Standard sign convention is followed. A tensile bar force is positive, and it is shown with arrowheads pointing at each other (t-sign convention). Displacement and loads are positive when directed along the positive coordinate directions (n-sign convention). Loads in the EE must be directed along positive directions.

The indeterminate truss shown in Fig. 6-3 has a total of four equilibrium equations that are written in terms of six bar forces ($F_1, F_2, \ldots, F_6$). There are two EE at node 1 (along displacement $u_1 = x_1$ and $v_1 = x_2$) and two at node 2 (along $u_2 = x_3$ and $v_3 = x_4$). EE are not written at the boundary nodes because these are restrained.

$$
\begin{aligned}
EE \text{ along} \qquad & u_1(x_1): && F_1 + F_2/\sqrt{2} = 0 \\
& v_1(x_2): && F_2/v_2 + F_3 = 1000 \\
& u_2(x_3): && F_4/\sqrt{2} + F_5 = 0 \\
& v_2(x_4): && -F_3 - F_4/\sqrt{2} = 0
\end{aligned}
$$

The EE in matrix notation can be written as ($[B]\{F\} = \{P\}$)

$$
\begin{bmatrix}
1 & 1/\sqrt{2} & 0 & 0 & 0 & 0 \\
0 & 1/\sqrt{2} & 1 & 0 & 0 & 0 \\
0 & 0 & 0 & 1/\sqrt{2} & 1 & 0 \\
0 & 0 & -1 & -1/\sqrt{2} & 0 & 0
\end{bmatrix}
\begin{Bmatrix} F_1 \\ F_2 \\ F_3 \\ F_4 \\ F_5 \\ F_6 \end{Bmatrix}
=
\begin{Bmatrix} 0 \\ 1000 \\ 0 \\ 0 \end{Bmatrix}
\tag{6-2}
$$

Observe the following characteristics of the equilibrium equation (Eq. 6-2), $[B]\ \{F\} = \{P\}$:

1. The coefficient equilibrium matrix $[B]$ of an indeterminate truss is a rectangular matrix, with more columns ($n = 6$) than rows ($m = 4$); $n > m$ and $r = n - m = 2$. For a determinate truss, the equilibrium matrix $[B]$ is a square matrix with $m = n$ and $r = 0$.
2. The EE are written along the displacement $\{X\}$ directions, but $\{X\}$ does not explicitly appear in the EE. The number of EE is exactly equal to the number of displacements ($m = 4$).
3. A column of the EE matrix $[B]$ can be a null column. The force associated with the null column is zero. Force F_6 will eventually turn out to be zero because the sixth column is a null column, and the sixth bar cannot carry any load because it is restrained at both ends. This column is retained for the purpose of illustration. A row of an equilibrium matrix must not be a null row, because such a condition will represent instability of the structure.
4. The EE of an indeterminate truss ($m = 4$) cannot be solved to obtain the ($n = 6$) bar forces and it is called an indeterminate problem. The problem remains unresolved for a truss (or a structure) that is made of a rigid material. The problem, however, can be solved for elastic structures, which is our interest.
5. The equilibrium equations are independent of the material properties (such as the Young's modulus and the coefficient of thermal expansion), bar temperatures, and support settling.

6.2 Deformation Displacement Relations

The deformation displacement relations ($\beta = [B]^T \{X\}$) derived earlier for a determinate truss still remain valid for an indeterminate truss. The number of DDR differs for determinate and indeterminate analysis. The number of deformations (n) increases, but the number of displacements (m) can remain the same ($n > m$). Because the DDR are defined through the equilibrium matrix $[B]$, their generation does not require additional effort, once the equilibrium matrix is known. The DDR for the six-bar truss example can be written as

$$\begin{Bmatrix} \beta_1 \\ \beta_2 \\ \beta_3 \\ \beta_4 \\ \beta_5 \\ \beta_6 \end{Bmatrix} = \begin{bmatrix} 1 & 0 & 0 & 0 \\ 1/\sqrt{2} & 1/\sqrt{2} & 0 & 0 \\ 0 & 1 & 0 & -1 \\ 0 & 0 & 1/\sqrt{2} & -1/\sqrt{2} \\ 0 & 0 & 1 & 0 \\ 0 & 0 & 0 & 0 \end{bmatrix} \begin{Bmatrix} x_1 \\ x_2 \\ x_3 \\ x_4 \end{Bmatrix} \tag{6-3a}$$

$$\begin{aligned} \beta_1 &= x_1 \\ \beta_2 &= \frac{x_1 + x_2}{\sqrt{2}} \\ \beta_3 &= x_2 - x_4 \\ \beta_4 &= \frac{x_3 - x_4}{\sqrt{2}} \\ \beta_5 &= x_3 \\ \beta_6 &= 0 \end{aligned} \tag{6-3b}$$

Six deformations ($\beta_1, \beta_2, \ldots, \beta_6$) are expressed in terms of four displacements (x_1, x_2, x_3, and x_4). For an indeterminate truss, the deformation components (n) outnumber the displacement components (m). Their difference is the degree of indeterminacy ($r = n - m > 0$). The six deformations are not independent of each other, but are related through the nodal displacements. For a determinate truss, the number of deformation components is equal to the number of displacement components ($r = n - m = 0$). The DDR are geometrical relations and are independent of the material properties (such as the Young's modulus and the coefficient of thermal expansion), the bar temperatures, and the external loads.

The interpretation of the DDR is straightforward. Deformation in bar 1 is equal to the displacement along the x-coordinate direction at node 1 ($\beta_1 = x_1$) because node 3 is restrained (see Fig. 6-3). Likewise, the deformation of bar 5 is $\beta_5 = x_3$ because node 3 is restrained. Deformation of bar 3 is the relative displacement of its two nodes (1 and 2) along the y-coordinate directions ($\beta_3 = x_2 - x_4$). The deformation of bar 2 ($\beta_2 = (x_1 + x_2)/\sqrt{2}$) is its elongation along the diagonal. The deformation of bar 4 ($\beta_4 = (x_3 - x_4)/\sqrt{2}$) is also a diagonal elongation, but the displacement component (x_3) expands the bar, whereas x_4 contracts it. Bar 6 has no deformation ($\beta_6 = 0$) because both of its nodes are restrained.

6.3 Force Deformation Relations

Forces $\{F\}$ and deformations $\{\beta\}$ are related through the force deformation relations. The FDR does not change between determinate and indeterminate analysis. In the FDR, $(\{\beta\}^e = \{\beta\} - \{\beta\}^0 = [G]\{F\})$,$\{\beta\}^e$ is the elastic deformation, $\{\beta\}$ is the total deformation, $\{\beta\}^0$ is the initial deformation, and the flexibility matrix $[G]$ is a diagonal matrix with n entries that correspond to the n bars of the truss. The flexibility coefficient is $g_{ii} = (\ell/AE)_i$, where ℓ_i is the length, A_i is the area, and E_i is the modulus of elasticity of the bar i; see Eq. (6-4a). The FDR for the six-bar truss with a mechanical load (and with no initial deformations, $\beta^0 = 0$ and $\beta = \beta^e$) has the following form:

$$
\begin{aligned}
\beta_1^e &= \beta_1 - \beta_1^0 = \frac{\ell_1 F_1}{A_1 E_1} \\
\beta_1^e &= \beta_1 = \frac{20F_1}{E} = \frac{20}{E}F_1 \\
\beta_2 &= \frac{40}{E}F_2 \\
\beta_3 &= \frac{20}{E}F_3 \\
\beta_4 &= \frac{40}{E}F_4 \\
\beta_5 &= \frac{20}{E}F_5 \\
\beta_6 &= \frac{20}{E}F_6
\end{aligned}
\tag{6-4a}
$$

The FDR $(\{\beta\} = [G]\{F\})$ in matrix notation can be written as

$$
\begin{Bmatrix} \beta_1 \\ \beta_2 \\ \beta_3 \\ \beta_4 \\ \beta_5 \\ \beta_6 \end{Bmatrix} = \left(\frac{20}{E}\right) \begin{bmatrix} 1 & & & & & \\ & 2 & & & & \\ & & 1 & & & \\ & & & 2 & & \\ & & & & 1 & \\ & & & & & 1 \end{bmatrix} \begin{Bmatrix} F_1 \\ F_2 \\ F_3 \\ F_4 \\ F_5 \\ F_6 \end{Bmatrix}
\tag{6-4b}
$$

The diagonal flexibility matrix $[G]$ is easily generated. It contains the material property and parameters of the truss bar.

6.4 Compatibility Conditions

The n-deformations $(\beta_1, \beta_2, \ldots, \beta_n)$ of an indeterminate truss are not independent of one another. They are controlled by linear equality constraints, which are the compatibility conditions. An r-degree indeterminate truss has r compatibility conditions, like $f_1(\beta_1, \beta_2, \ldots, \beta_n) = 0$, $f_2(\beta_1, \beta_2, \ldots, \beta_n) = 0$, and $f_r(\beta_1, \beta_2, \ldots, \beta_n) = 0$. The two-degree indeterminate six-bar truss shown in Fig. 6-3 has two compatibility conditions.

The deformation displacement relations are the raw material from which the compatibility conditions are derived. In the DDR ($\{\beta\} = [B]^T\{X\}$), n-deformations $\{\beta\}$ are expressed in terms of m-displacements $\{X\}$, and n is bigger than m, ($r = n - m > 0$). Elimination of the m displacements from the n DDR yields ($r = n - m$) constraints on deformations, which constitute the compatibility conditions.

$$[C]\{\beta\} = \{0\} \tag{6-5a}$$

Equation (6-5a) represents the r compatibility conditions of the indeterminate structure with n force and m displacement unknowns. In CC $\{\beta\}$ represents the total deformation. The compatibility matrix $[C]$ with r rows and n columns has full row rank r. The compatibility matrix $[C]$ is independent of the material of the structure, and it is also a geometrical relation.

The total deformation $\{\beta\}$ is decomposed into the elastic component $\{\beta^e\}$ and initial component $\{\beta^0\}$ as

$$\{\beta\} = \{\beta\}^e + \{\beta\}^0 \tag{6-5b}$$

$$[C]\{\beta\} = [C]\left\{\{\beta\}^e + \{\beta\}^0\right\} = 0$$

$$\{\delta R\} = -[C]\{\beta\}^0 \tag{6-5c}$$

The r component vector, $\{\delta R\}$ in the CC, is the called the effective initial deformation vector. The CC in terms of elastic deformation can be written as

$$[C]\{\beta\}^e = \{\delta R\} \tag{6-5d}$$

The compatibility condition, when expressed in terms of total deformation, is a homogeneous equation, such as Eq. (6-5a). The CC becomes a nonhomogeneous equation when it is written in terms of elastic deformations, such as in Eq. (6-5d), with $\{\delta R\}$ as the right side.

6.5 Initial Deformations and Support Settling

The initial deformation discussed for the determinate truss remains valid for the indeterminate truss. Such a deformation, when due to thermal effects, is equal to the product of temperature strain (ε^t) and the bar length (ℓ) as ($\beta^0 = \ell\varepsilon^t = \ell\alpha\Delta T$). Here, the coefficient of thermal expansion is α, the temperature change is ΔT, and the bar length is ℓ. The deformation vector is

$$\{\beta\}^0 = \{\ell\varepsilon^t\} = \{\ell\alpha\Delta t\} \tag{6-6}$$

The initial deformations $\{\beta\}^0$ due to support settling, which was explained in Chapter 2, have the following form:

$$\{\beta\}^0 = -[B_R]^T\{\bar{X}\} \tag{6-7}$$

Here, $\{\bar{X}\}$ is a p component vector that corresponds to a p number of simultaneous support settlings by amounts $(\bar{x}_1, \bar{x}_2, \ldots, \bar{x}_p)$. The matrix $[B_R]$ is associated with the EE written along the p component of the displacements $\{\bar{X}\}$.

The CC is discussed next, considering the example of the six-bar truss. It has two compatibility conditions. The CC is obtained by eliminating the four displacements from the six deformation displacement relations given by Eq. (6-3*b*).

$$\beta_6 = 0 \tag{6-8a}$$

$$\beta_1 - \sqrt{2}\beta_2 + \beta_3 - \sqrt{2}\beta_4 + \beta_5 = 0 \tag{6-8b}$$

The two CC in matrix notation can be written as

$$\begin{bmatrix} 0 & 0 & 0 & 0 & 0 & 1 \\ 1 & -\sqrt{2} & 1 & -\sqrt{2} & 1 & 0 \end{bmatrix} \begin{Bmatrix} \beta_1 \\ \beta_2 \\ \beta_3 \\ \beta_4 \\ \beta_5 \\ \beta_6 \end{Bmatrix} = \begin{Bmatrix} 0 \\ 0 \end{Bmatrix} \tag{6-8c}$$

The first CC ($\beta_6 = 0$) has a single entity because this solitary member 6 is connected to fully restrained supports at nodes 3 and 4. Such a situation arises when the EE matrix $[B]$ contains a null column (here, the 6th column is a null column). The second CC controls the deformations of the other five bars. The CC given by Eq. (6-8*c*) are specialized for the three load cases.

Load Case 1—Mechanical Load

This load case has no initial deformation. The total deformation is equal to the elastic deformation ($\{\beta\} = \{\beta\}^e$). The CC is obtained from Eq. (6-8*c*) by replacing $\{\beta\}$ in favor of $\{\beta\}^e$ as

$$\begin{bmatrix} 0 & 0 & 0 & 0 & 0 & 1 \\ 1 & -\sqrt{2} & 1 & -\sqrt{2} & 1 & 0 \end{bmatrix} \begin{Bmatrix} \beta_1^e \\ \beta_2^e \\ \beta_3^e \\ \beta_4^e \\ \beta_5^e \\ \beta_6^e \end{Bmatrix} = \begin{Bmatrix} 0 \\ 0 \end{Bmatrix} \tag{6-8d}$$

Load Case 2—Thermal Load

The initial deformation due to temperature variation $\{\beta\}^0 = (\ell\alpha\Delta T)$ for the truss is obtained as follows:

$$
\begin{aligned}
\beta_1^0 &= \ell\alpha\Delta T_1 = 0 \\
\beta_2^0 &= 0 \\
\beta_3^0 &= 20 \times 6.0 \times 10^{-6} \times 100 = 12 \times 10^{-3}\ \text{in.} \\
\beta_4^0 &= 0 \\
\beta_5^0 &= 0 \\
\beta_6^0 &= 0
\end{aligned}
\tag{6-8e}
$$

$$
\{\beta\}^0 = \begin{Bmatrix} 0 \\ 0 \\ 12 \times 10^{-3} \\ 0 \\ 0 \\ 0 \end{Bmatrix}
\tag{6-8f}
$$

The CC for thermal load is obtained by adding $\{\delta R\}$ terms in Eq. (6-5*d*). It is discussed later in this chapter.

Load Case 3—Support Settling

The initial deformation due to settling of the foundation, given by Eq. (6-7), requires the definition of the matrix $[B_R]$. This matrix is obtained by writing the EE along the direction of support settling. For this example, the row matrix $[B_R]$ is obtained by writing the EE at support node 3 along the *y*-coordinate direction, being the direction of settling.

$$
R_{v3} = \frac{F_4}{\sqrt{2}} + F_6
\tag{6-8g}
$$

$$
[B_R] = \begin{bmatrix} 0 & 0 & 0 & \frac{1}{\sqrt{2}} & 0 & 1 \end{bmatrix}
\tag{6-8h}
$$

The initial deformation due to the settling of the support by 0.1 in. along the *y*-coordinate direction is

$$
\{\beta\}^0 = -[B_R]^T\{\bar{X}\} = -\begin{bmatrix} 0 \\ 0 \\ 0 \\ \frac{1}{\sqrt{2}} \\ 0 \\ 1 \end{bmatrix}\{0.1\} = -\begin{Bmatrix} 0 \\ 0 \\ 0 \\ 0.1/\sqrt{2} \\ 0 \\ 0.1 \end{Bmatrix}
\tag{6-8i}
$$

The compatibility conditions accommodate the initial deformations that may be due to temperature variation or support settling.

6.6 Null Property of the Equilibrium Equation and Compatibility Condition Matrices

The product of the equilibrium matrix $[B]$ and the compatibility matrix $[C]$ is a null matrix ($[B][C]^T = [0]$ or $[C][B]^T = [0]$). The null matrix can be verified from the definition of the DDR and the CC as follows:

$$\left.\begin{aligned} \text{DDR} \rightarrow \{\beta\} &= [B]^T\{X\} \\ CC \rightarrow [C]\{\beta\} &= 0 \\ [C][B]^T\{X\} &= 0 \end{aligned}\right\} \tag{6-9}$$

Because the displacement $\{X\}$ is arbitrary and it is not null a vector, its coefficient matrix must vanish, or

$$[C][B]^T = [B][C]^T = [0] \tag{6-10}$$

The equilibrium matrix $[B]$ and the compatibility matrix $[C]$ are related. The null property should be verified after the generation of the two matrices: $[B]$ and $[C]$.

6.7 Response Variables of Analysis

The response variables of a truss include bar forces, reactions, deformations, displacements, and stress and strain. The six-bar truss, for example, has a total of 32 response variables, consisting of

1. Six bar forces and four reactions
2. Six deformations
3. Four displacements
4. Six bar stresses
5. Six bar strains

The 32 response variables are seldom calculated simultaneously. First, we calculate a single set of variables, called the primary variables. The remaining response variables are back-calculated from the primary variables. For a typical problem, the determination of the primary variables requires the bulk of the effort, which may exceed 80 percent of the total calculations required to solve the problem. Back-calculation requires a small fraction of the total effort. Two solution methods have been developed on the basis of the selection of the primary variables.

1. The method of forces, with forces as the primary unknowns.
2. The method of displacements, with displacements as the primary unknowns.

Both methods satisfy all analysis equations (EE, CC, DDR, and FDR) and yield all response variables.

6.8 Method of Forces or the Force Method

The method of forces considers all the n internal forces as the primary unknowns of the problem. Reactions are not included in this set. This method requires a set of n equations to calculate the n forces. The n equations are obtained by coupling the m equilibrium equations to the r compatibility conditions ($n = m + r$). Solution of the n equations yields the primary force unknowns. All other response variables are back-calculated from the n forces.

Conceptually, such an analysis can be represented by the following symbolic expression:

$$\left[\frac{\text{Equilibrium equation}}{\text{Compatibility condition}}\right]\{\text{Force}\} = \left\{\frac{\text{Mechanical load}}{\text{Initial deformation}}\right\} \tag{6-11}$$

A balance of the internal force $\{F\}$ and external mechanical load $\{P\}$ is achieved through the equilibrium equation, which forms the upper part of Eq. (6-11). The compliance of force and initial deformation is achieved through the compatibility condition, representing the lower portion of Eq. (6-11). This symbolic expression, which bestows appropriate emphasis on equilibrium and compatibility, provides both necessary and sufficient conditions for determining forces in an elastic indeterminate structure. In advanced finite element structural analysis, this method is referred to as the Integrated Force Method (IFM), and the same name will be maintained for strength of materials analysis. Equation (6-11) in matrix notation is written as

$$[S]\{F\} = \{P\}^* \tag{6-12}$$

Here, the coefficient matrix $[S]$ has the dimensions of $n \times n$. The right side vector $\{P\}^*$ includes both the mechanical load $\{P\}$ and the effective initial deformation vector $\{\delta R\}$.

6.9 Method of Displacements or the Displacement Method

The method of displacements considers all the m-nodal displacements as the primary unknowns of the problem. This method requires a set of m equations to calculate the m displacements. Navier (1785–1836) in 1822 transmuted the m equilibrium equations to generate m equations, which are expressed in terms of the m displacements.

$$[K]\{X\} = \{P\} \tag{6-13}$$

Here, the coefficient matrix $[K]$ with dimensions of $m \times m$ is called the stiffness matrix. The right side vector $\{P\}$ is the load vector. Other response variables are back-calculated from the displacements. This method is also called the stiffness method.

The equation set (6-13) can also be obtained by manipulating the IFM equations. This solution strategy is referred to as the Dual Integrated Force Method (IFMD). The governing equations of IFMD, which resemble the stiffness equations, will be written as $[D]\{X\} = \{P\}$. Both the primal IFM and the IFMD yield identical solutions. The dual method and the stiffness method also yield identical solutions to simple strength of materials problems.

The performance of the dual method and the stiffness method can differ for complex solid mechanics problems. This textbook emphasizes IFM and the stiffness method, but it also illustrates IFMD for a truss problem.

In summary, there are two major methods. The method of forces, or IFM, which calculates n forces, $\{F\}$, by solving the n equations ($[S]\{F\} = \{P\}$) and then back-calculating other response variables. On the other hand, the method of displacements, also called the stiffness method, calculates m displacements $\{X\}$ by solving the m equations ($[K]\{X\} = \{P\}$) and then back-calculates the other variables. The IFMD is a variation of the Integrated Force Method. There is also the traditional redundant force method, which is suitable for small problems and is discussed in Chapter 14. We recommend that readers learn all the methods and compare their relative performances.

6.10 Integrated Force Method

The Integrated Force Method (IFM) requires both the equilibrium equations and the compatibility conditions to calculate the internal forces. The m EE are expressed in terms of the forces ($[B]\{F\} = \{P\}$), but the r CC are expressed in terms of the deformations ($[C]\{\beta\}^e = \{\delta R\}$). The CC has to be expressed in terms of the forces before these can be coupled to the EE. The CC is expressed in forces by eliminating deformations in favor of forces by using the force deformation relations.

$$[C]\{\beta\}^e = \{\delta R\} \tag{6-14a}$$

$$\{\beta\}^e = [G]\{F\} \tag{6-14b}$$

$$[C][G]\{F\} = \{\delta R\} \tag{6-14c}$$

The EE and CC are coupled to obtain the governing IFM equation.

$$[B]\{F\} = \{P\} \tag{6-15a}$$

$$[C][G]\{F\} = \{\delta R\} \tag{6-15b}$$

$$\left[\frac{[B]}{[C][G]}\right]\{F\} = \left\{\frac{P}{\delta R}\right\} \tag{6-16a}$$

$$\text{or} \quad [S]\{F\} = \{P\}^* \tag{6-16b}$$

$$[S] = \left[\frac{[B]}{[C][G]}\right] \tag{6-16c}$$

$$\{P\}^* = \left\{\frac{P}{\delta R}\right\} \tag{6-16d}$$

Forces are obtained as a solution to Eq. (6-16*a*). Other response variables can be back-calculated from the n forces. The basic steps required to solve an indeterminate problem using IFM are as follows:

Procedures for Analysis

Step 0—Solution Strategy. At the initial problem-formulation stage, the internal forces and nodal displacements are identified. The number of equilibrium equations, compatibility conditions, and degree of indeterminacy are determined.
Step 1—Formulate the Equilibrium Equations.
Step 2—Derive the Deformation Displacement Relations.
Step 3—Generate the Compatibility Conditions.
Step 4—Formulate the Force Deformation Relations.
Step 5—Express the Compatibility Conditions in Terms of Forces.
Step 6—Couple the Equilibrium Equations and Compatibility Conditions to Obtain the IFM Equations, and Solve for the Forces.
Step 7—Back-Calculate the Displacements and Other Response Variables, as Required.

The IFM solution strategy is illustrated by considering the six-bar truss (Example 6–1) and a three-bar truss. Each truss is analyzed for mechanical load, thermal load, and support settling.

Load Case 1—Solution for Mechanical Loads

Step 1—Formulate the Equilibrium Equations

The four EE along the displacement directions (x_1, x_2, x_3, x_4, also derived in Eq. 6-2) are

$$\begin{bmatrix} 1 & 1/\sqrt{2} & 0 & 0 & 0 & 0 \\ 0 & 1/\sqrt{2} & 1 & 0 & 0 & 0 \\ 0 & 0 & 0 & 1/\sqrt{2} & 1 & 0 \\ 0 & 0 & -1 & -1/\sqrt{2} & 0 & 0 \end{bmatrix} \begin{Bmatrix} F_1 \\ F_2 \\ F_3 \\ F_4 \\ F_5 \\ F_6 \end{Bmatrix} = \begin{Bmatrix} 0 \\ 1000 \\ 0 \\ 0 \end{Bmatrix} \tag{6-17a}$$

Step 2—Derive the Deformation Displacement Relations

The six DDR ($\{\beta\} = [\beta]^T\{X\}$), also derived in Eq. (6-3) have the following form:

$$\begin{aligned} \beta_1 &= x \\ \beta_2 &= \frac{(x_1 + x_2)}{\sqrt{2}} \\ \beta_3 &= x_2 - x_4 \\ \beta_4 &= \frac{(x_3 - x_4)}{\sqrt{2}} \\ \beta_5 &= x_3 \\ \beta_6 &= 0 \end{aligned} \tag{6-17b}$$

Step 3—Generate the Compatibility Conditions

The two CC, which are obtained by eliminating the four displacements from the six DDR, can be written in matrix notation as

$$\begin{bmatrix} 0 & 0 & 0 & 0 & 0 & 1 \\ 1 & -\sqrt{2} & 1 & -\sqrt{2} & 1 & 0 \end{bmatrix} \begin{Bmatrix} \beta_1 \\ \beta_2 \\ \beta_3 \\ \beta_4 \\ \beta_5 \\ \beta_6 \end{Bmatrix} = \begin{Bmatrix} 0 \\ 0 \end{Bmatrix} \tag{6-17c}$$

The null property ($[B][C]^T = [0]$) can be verified from the one EE and the CC matrices as

$$\begin{bmatrix} 1 & 1/\sqrt{2} & 0 & 0 & 0 & 0 \\ 0 & 1/\sqrt{2} & 1 & 0 & 0 & 0 \\ 0 & 0 & 0 & 1/\sqrt{2} & 1 & 0 \\ 0 & 0 & -1 & -1/\sqrt{2} & 0 & 0 \end{bmatrix} \begin{bmatrix} 0 & 1 \\ 0 & -\sqrt{2} \\ 0 & 1 \\ 0 & -\sqrt{2} \\ 0 & 1 \\ 1 & 0 \end{bmatrix} = \begin{bmatrix} 0 & 0 \\ 0 & 0 \\ 0 & 0 \\ 0 & 0 \end{bmatrix} \tag{6-17d}$$

Step 4—Formulate the Force Deformation Relations

The FDR ($\beta = F\ell/AE$) for the six truss bars are as follows:

$$\beta_1 = \frac{\ell_1 F_1}{A_1 E_1} = \frac{20F_1}{E} \qquad \beta_4 = \frac{40F_4}{E}$$

$$\beta_2 = \frac{40F_2}{E} \qquad \beta_5 = \frac{20F_5}{E}$$

$$\beta_3 = \frac{20F_3}{E} \qquad \beta_6 = \frac{20F_6}{E} \tag{6-17e}$$

Step 5—Express the Compatibility Conditions in Terms of Forces

The CC is expressed in forces by eliminating deformations between the CC and FDR to obtain

$$\frac{20}{E} \begin{bmatrix} 0 & 0 & 0 & 0 & 0 & 1 \\ 0 & -2\sqrt{2} & 1 & -2\sqrt{2} & 1 & 0 \end{bmatrix} \begin{Bmatrix} F_1 \\ F_2 \\ F_3 \\ F_4 \\ F_5 \\ F_6 \end{Bmatrix} = \begin{Bmatrix} 0 \\ 0 \end{Bmatrix} \tag{6-17f}$$

Step 6—Couple the Equilibrium Equations and Compatibility Conditions to Obtain the IFM Equations, and Solve for Forces

$$\begin{bmatrix} 1 & 1/\sqrt{2} & 0 & 0 & 0 & 0 \\ 0 & 1/\sqrt{2} & 1 & 0 & 0 & 0 \\ 0 & 0 & 0 & 1/\sqrt{2} & 1 & 0 \\ 0 & 0 & -1 & -1/\sqrt{2} & 0 & 0 \\ 0 & 0 & 0 & 0 & 0 & 1 \\ 1 & -2\sqrt{2} & 1 & -2\sqrt{2} & 1 & 0 \end{bmatrix} \begin{Bmatrix} F_1 \\ F_2 \\ F_3 \\ F_4 \\ F_5 \\ F_6 \end{Bmatrix} = \begin{Bmatrix} 0 \\ 1000 \\ 0 \\ 0 \\ 0 \\ 0 \end{Bmatrix} \tag{6-17g}$$

The CC is scaled, by setting $(20/E)$ to unity because of the homogeneous nature of the equation. Solution of the IFM equation yields the forces:

$$\begin{Bmatrix} F_1 \\ F_2 \\ F_3 \\ F_4 \\ F_5 \\ F_6 \end{Bmatrix} = \begin{Bmatrix} -545.5 \\ 771.4 \\ 454.5 \\ -642.8 \\ 454.5 \\ 0.0 \end{Bmatrix}_{\text{lbf}} \tag{6-17h}$$

Step 7—Back-Calculate the Displacement, if Required, from the Deformation Displacement Relations

Displacements are back-calculated from the DDR. Displacement calculation requires only $(m = 4)$ out of the $(n = 6)$ DDR. Any m DDR can be chosen. Other $(n - m)$ DDR are satisfied automatically.

$$\begin{aligned} x_1 &= \beta_1 = \frac{20F_1}{E} = -1.090 \times 10^{-3}\ \text{in.} \\ x_2 &= -\beta_1 + \sqrt{2}\beta_2 = -\frac{20}{E}\left(F_1 - 2\sqrt{2}F_2\right) = 5.454 \times 10^{-3}\ \text{in.} \\ x_3 &= \beta_5 = \frac{20F_5}{E} = 0.909 \times 10^{-3}\ \text{in.} \\ x_4 &= -\left(\beta_1 - \sqrt{2}\beta_2 + \beta_3\right) = -\frac{20}{E}\left(F_1 - 2\sqrt{2}F_2 + F_3\right) = 4.545 \times 10^{-3}\ \text{in.} \end{aligned} \tag{6-17i}$$

Calculation of Reactions

The reactions are back-calculated from the bar forces. The reaction (R_{3x}) at node 3 in the x-coordinates direction is obtained as

$$R_{3x} = -\left(F_1 + F_4/\sqrt{2}\right) = 545.5 + \frac{642.8}{\sqrt{2}} = 1000\,\text{lb}$$

Likewise, other reactions are calculated as

$$\begin{Bmatrix} R_{3x} \\ R_{3y} \\ R_{4x} \\ R_{4y} \end{Bmatrix} = \begin{Bmatrix} 1000.00 \\ -454.6 \\ -1000.00 \\ -545.4 \end{Bmatrix}_{\text{lbf}} \tag{6-17j}$$

The reactions satisfy the overall EE ($\Sigma F_x = \Sigma F_Y = \Sigma M = 0$). Bar stress ($\sigma = F/A$), strain ($\varepsilon = \sigma/E$), and deformation ($\beta = [B]^T\{X\}$) are as follows:

$$\{\sigma\} = \begin{Bmatrix} \sigma_1 \\ \sigma_2 \\ \sigma_3 \\ \sigma_4 \\ \sigma_5 \\ \sigma_6 \end{Bmatrix} = \begin{Bmatrix} -545.5 \\ 1091.1 \\ 454.5 \\ -909.2 \\ 454.5 \\ 0 \end{Bmatrix}_{\text{psi}} \quad \{\varepsilon\} = \begin{Bmatrix} -54.6 \\ 109.1 \\ 45.5 \\ -90.9 \\ 45.5 \\ 0 \end{Bmatrix} \times 10^{-6} \quad \{\beta\} = \begin{Bmatrix} -1.09 \\ 3.09 \\ 0.91 \\ 2.57 \\ 0.91 \\ 0 \end{Bmatrix}_{\text{in.}} \times 10^{-3} \tag{6-17k}$$

Load Case 2—Solution for Thermal Loads

Only the right side of the CC, or $\{\delta R\}$, has to be modified for thermal analysis:

$$\{\delta_R\} = -[C]\{\beta\}^0$$

$$\{\beta\}^0 = \begin{Bmatrix} 0 \\ 0 \\ \alpha\ell\Delta T \\ 0 \\ 0 \\ 0 \end{Bmatrix}$$

$$\{\delta R\} = -[C]\{\beta\}^0 = -\begin{bmatrix} 0 & 0 & 0 & 0 & 0 & 1 \\ 1 & -\sqrt{2} & 1 & -\sqrt{2} & 1 & 0 \end{bmatrix} \begin{Bmatrix} 0 \\ 0 \\ \alpha\ell\Delta T \\ 0 \\ 0 \\ 0 \end{Bmatrix}$$

or

$$\{\delta R\} = \begin{Bmatrix} 0 \\ -\alpha\ell\Delta T \end{Bmatrix} = \begin{Bmatrix} 0 \\ -1.20 \times 10^{-2} \end{Bmatrix} \tag{6-17l}$$

For thermal loads only, the IFM equations can be written as

$$\begin{bmatrix} 1 & 1/\sqrt{2} & 0 & 0 & 0 & 0 \\ 0 & 1/\sqrt{2} & 1 & 0 & 0 & 0 \\ 0 & 0 & 0 & 1/\sqrt{2} & 1 & 0 \\ 0 & 0 & -1 & -1/\sqrt{2} & 0 & 0 \\ 0 & 0 & 0 & 0 & 0 & 1 \\ 1 & -2/\sqrt{2} & 1 & -2/\sqrt{2} & 1 & 0 \end{bmatrix} \begin{Bmatrix} F_1 \\ F_2 \\ F_3 \\ F_4 \\ F_5 \\ F_6 \end{Bmatrix} = \begin{Bmatrix} 0 \\ 0 \\ 0 \\ 0 \\ 0 \\ -6.0 \times 10^3 \end{Bmatrix} \tag{6-17m}$$

The $\{\delta R\}$ in Eq. (6-17m) is normalized with respect to $20/E$. Forces due to $\Delta T = 100\,°\text{F}$ in member 3 are obtained by solving the IFM equation as

$$\begin{Bmatrix} F_1 \\ F_2 \\ F_3 \\ F_4 \\ F_5 \\ F_6 \end{Bmatrix} = \begin{Bmatrix} -545.45 \\ 771.39 \\ -545.45 \\ 771.39 \\ -545.45 \\ 0 \end{Bmatrix}_{\text{lb}} \tag{6-17n}$$

Calculation of Displacements

Displacements at the nodes are calculated from the DDR as follows:

$$\begin{aligned} x_1 &= \beta_1 = \beta_1^e + \beta_1^t \\ \beta_1^e &= \left(\frac{\ell F}{AE}\right)_1 = -1.090 \times 10^{-3} \\ \beta_1^t &= 0 \\ x_1 &= -1.090 \times 10^{-3}\ \text{in.} \end{aligned} \tag{6-17o}$$

Likewise, other displacements can be calculated:

$$\begin{Bmatrix} x_1 \\ x_2 \\ x_3 \\ x_4 \end{Bmatrix} = \begin{Bmatrix} \beta_1 \\ -\beta_1 + \sqrt{2}\beta_2 \\ \beta_5 \\ -\left(\beta_1 - \sqrt{2}\beta_2 + \beta_3\right) \end{Bmatrix} = \begin{Bmatrix} -1.091 \\ 5.454 \\ -1.091 \\ -5.454 \end{Bmatrix} \times 10^{-3}\ \text{in.} \tag{6-17p}$$

The reactions back-calculated from forces are as follows:

$$\begin{Bmatrix} R_{3x} \\ R_{3y} \\ R_{4x} \\ R_{4y} \end{Bmatrix} = \begin{Bmatrix} 0.0 \\ 545.4 \\ 0.0 \\ -545.4 \end{Bmatrix}_{\text{lbf}} \tag{6-17q}$$

The reactions self-equilibrate, $(R_{3y} + R_{4y} = 0)$, because there is no external load.

The calculation of stress and strain is not repeated because these are straightforward. The total deformations are calculated as $\{\beta\} = [B]^T\{X\}$ from the known EE matrix $[B]$ and displacements $\{X\}$.

$$\begin{aligned}
\beta_1 &= x_1 = -1.09 \times 10^{-3}\ \text{in.} \\
\beta_2 &= \frac{x_1 + x_2}{\sqrt{2}} = 3.09 \times 10^{-3}\ \text{in.} \\
\beta_3 &= x_2 - x_4 = 0.91 \times 10^{-3}\ \text{in.} \\
\beta_4 &= \frac{x_3 + x_4}{\sqrt{2}} = -3.64 \times 10^{-3}\ \text{in.} \\
\beta_5 &= x_3 = 0.909 \times 10^{-3}\ \text{in.} \\
\beta_6 &= 0
\end{aligned} \tag{6-17r}$$

Load Case 3—Solution for Support Settling

The expression $\{\delta R\}$ has to be modified for the settling of support node 3 by $= 0.1$ in. along the y-coordinate direction. The initial deformation $\{\beta\}^0$ calculated in Eq. (6-8i) is

$$\{\beta\}^0 = [B_R]^T\{\bar{X}\} = \begin{Bmatrix} 0 \\ 0 \\ 0 \\ -0.0707 \\ 0 \\ -0.10 \end{Bmatrix}$$

$$\{\delta R\} = -[C]\{\beta\}^0 = -\begin{bmatrix} 0 & 0 & 0 & 0 & 0 & 1 \\ 1 & -\sqrt{2} & 1 & -\sqrt{2} & 1 & 0 \end{bmatrix} \begin{Bmatrix} 0 \\ 0 \\ 0 \\ -0.0707 \\ 0 \\ -0.1 \end{Bmatrix}$$

or

$$\{\delta R\} = \begin{Bmatrix} -0.1 \\ 0.1 \end{Bmatrix} \tag{6-17s}$$

The IFM equations for support settling can be written as

$$\begin{bmatrix} 1 & 1/\sqrt{2} & 0 & 0 & 0 & 0 \\ 0 & 1/\sqrt{2} & 1 & 0 & 0 & 0 \\ 0 & 0 & 0 & 1/\sqrt{2} & 1 & 0 \\ 0 & 0 & -1 & -1/\sqrt{2} & 0 & 0 \\ 0 & 0 & 0 & 0 & 0 & 1 \\ 1 & -2/\sqrt{2} & 1 & -2/\sqrt{2} & 1 & 0 \end{bmatrix} \begin{Bmatrix} F_1 \\ F_2 \\ F_3 \\ F_4 \\ F_5 \\ F_6 \end{Bmatrix} = \begin{Bmatrix} 0 \\ 0 \\ 0 \\ 0 \\ -50{,}000 \\ 50{,}000 \end{Bmatrix} \tag{6-17t}$$

The $\{\delta R\}$ in Eq. (6-17t) is normalized with respect to $20/E$. Forces due to the settling of support 3 by 0.1 in. in the y-coordinate direction are obtained by solving the IFM equation as

$$\begin{Bmatrix} F_1 \\ F_2 \\ F_3 \\ F_4 \\ F_5 \\ F_6 \end{Bmatrix} = \begin{Bmatrix} -4545.0 \\ 6428.0 \\ -4545.0 \\ 6428.0 \\ -4545.0 \\ 50{,}000 \end{Bmatrix}_{\text{lbf}} \tag{6-17u}$$

Calculation of Displacements

Displacements at the nodes are calculated from the DDR as follows:

$$\begin{aligned} x_1 &= \beta_1 = \beta_1^e + \beta_1^t \\ \beta_1^e &= \left(\frac{\ell F}{AE}\right)_1 = -9.1 \times 10^{-3} \\ \beta_1^0 &= 0 \\ x_1 &= -9.1 \times 10^{-3}\ \text{in.} \end{aligned} \tag{6-17v}$$

Likewise, other displacements can be calculated:

$$\begin{Bmatrix} x_1 \\ x_2 \\ x_3 \\ x_4 \\ x_5 = \bar{x} \end{Bmatrix} = \begin{Bmatrix} \beta_1^e \\ -\beta_1^e + \sqrt{2}\beta_2^e \\ \beta_5^e \\ -\left(\beta_1^e - \sqrt{2}\beta_2^e + \beta_3^e\right) \\ \text{prescribed} \end{Bmatrix} = \begin{Bmatrix} -9.09 \\ 45.46 \\ -9.09 \\ -54.54 \\ 100.00 \end{Bmatrix} \times 10^{-3}\ \text{in.} \tag{6-17w}$$

Reactions are back-calculated from forces

$$\begin{Bmatrix} R_{3x} \\ R_{3y} \\ R_{4x} \\ R_{4y} \end{Bmatrix} = \begin{Bmatrix} 0 \\ 54.54 \\ 0 \\ -54.54 \end{Bmatrix}_{\text{kip}} \tag{6-17x}$$

The formula ($\{\beta\} = [B]^T\{X\}$) cannot be used to calculate the deformations because the EE matrix $[B]$ does not include the reactions as primary forces, hence the prescribed displacement is not included in the DDR. The total deformation is back-calculated from the elastic deformation and the initial deformation.

$$\beta_1 = \beta_1^e = \left(\frac{F\ell}{AE}\right)_1 = \frac{-4545 \times 20}{1 \times 10 \times 10^6} = 9.09 \times 10^{-3}\,\text{in.}$$

$$\beta_2 = \beta_2^e = \frac{6428 \times 20\sqrt{2}}{1/\sqrt{2} \times 10^7} = 25.71 \times 10^{-3}\,\text{in.}$$

$$\beta_3 = \beta_3^e = -\frac{4545 \times 20}{1 \times 10^7} = -9.09 \times 10^{-3}\,\text{in.}$$

$$\beta_4 = \beta_4^e + \beta_4^0 = \frac{6428 \times 20\sqrt{2}}{1/\sqrt{2} \times 107} + 0.0707 = -45 \times 10^{-3}\,\text{in.}$$

$$\beta_5 = \beta_5^e = \frac{-4545 \times 20}{1 \times 107} = -9.09 \times 10^{-3}\,\text{in.}$$

$$\beta_6 = \beta_6^e + \beta_6^0 = \frac{50{,}000 \times 20}{1 \times 107} - 0.1 = 0\,\text{in.} \tag{6-17y}$$

EXAMPLE 6-2

A three-bar truss, shown in Fig. 6-4*a*, is made of steel with a Young's modulus E of 30,000 ksi and a coefficient of thermal expansion α of 6.6×10^{-6} per °F. The areas of its three bars (A_1, A_2, A_3) are (1.0, 1.0, and 2.0) in.^{2}, respectively. Analyze the truss for the following three load conditions:

1. *Load Case 1*: Mechanical loads ($P_x = 50$ kips and $P_y = 100$ kips) as shown in Fig. 6-4*a*.
2. *Load Case 2*: Two cases of temperature variations.

$$\begin{Bmatrix} \Delta T_1 \\ \Delta T_2 \\ \Delta T_3 \end{Bmatrix}_{\text{case1}} = \begin{Bmatrix} 100.0 \\ 200.0 \\ 300.0 \end{Bmatrix}^{\circ\text{F}} \quad \text{and} \quad \begin{Bmatrix} \Delta T_1 \\ \Delta T_2 \\ \Delta T_3 \end{Bmatrix}_{\text{case2}} = \begin{Bmatrix} 100.0 \\ -200.0 \\ -300.0 \end{Bmatrix}^{\circ\text{F}}$$

Here ΔT_i is the temperature variation in bar i.

1. *Load Case 3*: Settling of support node 4 by 1 in. in the y-coordinate direction.

Load Case 1—Solution for Mechanical Loads

Step 0—Solution Strategy

A coordinate system (x, y) with origin at node 1 is shown in Fig. 6-4*b*. The three bar forces (F_1, F_2, F_3) are the three ($n = 3$) force unknowns. It has two ($m = 2$) displacements at node 1: (x_1 and x_2). The truss is one degree indeterminate ($r = n - m = 1$). It has two equilibrium equations and one compatibility condition.

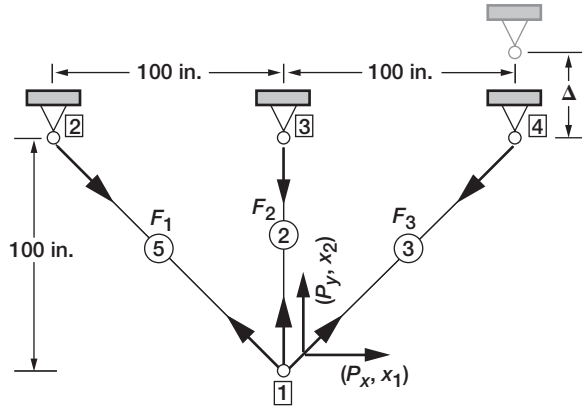

(a) Truss.

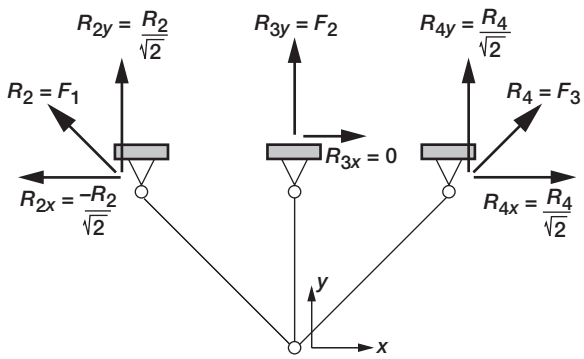

(b) Reactions.

FIGURE 6-4 *Three-bar truss.*

Step 1—Formulate the Equilibrium Equations

The two EE ($[B]\{[F]\} = \{P\}$) of the problem are obtained from the force balance condition at the free node 1 along displacements x_1 and x_2.

$$\begin{bmatrix} 1/\sqrt{2} & 0 & -1/\sqrt{2} \\ -1/\sqrt{2} & -1 & -1/\sqrt{2} \end{bmatrix} \begin{Bmatrix} F_1 \\ F_2 \\ F_3 \end{Bmatrix} = \begin{Bmatrix} P_x \\ P_y \end{Bmatrix} = \begin{Bmatrix} 50 \\ 100 \end{Bmatrix} \tag{6-18}$$

One CC is required for the analysis of the three-bar truss.

Step 2—Derive the Deformation Displacement Relations

The DDR ($\{\beta\} = [B]^T\{X\}$) of the truss has the following form:

$$\beta_1 = \frac{x_1}{\sqrt{2}} - \frac{x_2}{\sqrt{2}}$$

$$\beta_2 = -x_2$$

$$\beta_3 = -\frac{x_1}{\sqrt{2}} - \frac{x_2}{\sqrt{2}} \tag{6-19a}$$

Here, β_1, β_2, and β_3 are the bar deformations corresponding to forces F_1, F_2, and F_3, respectively.

Step 3—Generate the Compatibility Condition

The single CC for the problem is obtained by eliminating two displacements from the three DDR in Eq. (6-19*b*).

$$\beta_1 - \sqrt{2}\beta_2 + \beta_3 = 0 \tag{6-19b}$$

The CC can be written in matrix notation as

$$\begin{bmatrix} 1 & -\sqrt{2} & 1 \end{bmatrix} \begin{Bmatrix} \beta_1 \\ \beta_2 \\ \beta_2 \end{Bmatrix} = 0 \tag{6-19c}$$

The null property ($[B][C]^T = [0]$) of the EE and CC matrices can be verified as

$$\begin{bmatrix} 1/\sqrt{2} & 0 & -1/\sqrt{2} \\ -1/\sqrt{2} & -1 & -1/\sqrt{2} \end{bmatrix} \begin{bmatrix} 1 \\ -\sqrt{2} \\ 1 \end{bmatrix} = \begin{bmatrix} 0 \\ 0 \end{bmatrix} \tag{6-19d}$$

Step 4—Formulate the Force Deformation Relations

The FDR for the bars of the truss can be obtained as ($\beta = F\ell/AE$). The lengths of the three bars are: ($100\sqrt{2}$, 100, and $100\sqrt{2}$) in., and their areas are (1.0, 1.0, and 2.0) in.^{2}, respectively.

$$\beta_1 = \frac{\ell_1 F_1}{A_1 E_1} = \left(\frac{100\sqrt{2}}{E}\right) F_1$$

$$\beta_2 = \frac{100}{E} F_2$$

$$\beta_3 = \frac{50\sqrt{2}}{E} F_3 \tag{6-19e}$$

Step 5—Express the Compatibility Conditions in Terms of Forces

The CC is obtained in terms of forces by eliminating deformations between the CC and FDR.

$$\frac{100\sqrt{2}}{E}\begin{bmatrix} 1 & -1 & 1/2 \end{bmatrix}\begin{Bmatrix} F_1 \\ F_2 \\ F_3 \end{Bmatrix} = \{0\} \tag{6-19f}$$

Step 6—Couple the Equilibrium Equations and Compatibility Conditions to Obtain the IFM Equations, and Solve for Forces

$$\begin{bmatrix} 1/\sqrt{2} & 0 & -1/\sqrt{2} \\ -1/\sqrt{2} & -1 & -1/\sqrt{2} \\ 1 & -1 & 1/2 \end{bmatrix}\begin{Bmatrix} F_1 \\ F_2 \\ F_3 \end{Bmatrix} = \begin{Bmatrix} 50 \\ 100 \\ 0 \end{Bmatrix} \tag{6-19g}$$

Solution of the IFM equation yields the forces as

$$\begin{Bmatrix} F_1 \\ F_2 \\ F_3 \end{Bmatrix} = -\begin{Bmatrix} 5.025 \\ 42.893 \\ 75.736 \end{Bmatrix}_{\text{kips}} \tag{6-19h}$$

Step 7—Back-Calculate Displacement, If Required, from the Deformation Displacement Relations

$$x_2 = -\beta_2 = -\frac{100F_2}{E} = 0.143\,\text{in.}$$

$$x_1 = \sqrt{2}\beta_1 - \beta_2 = \frac{100}{E}(2F_1 - F_2) = 0.110\,\text{in.} \tag{6-19i}$$

Load Case 2—Solution for Thermal Loads

Thermal analysis requires the inclusion of the nontrivial $\{\delta R\}$ in the right side of the CC:

$$\{\delta R\} = -[C]\{\beta\}^0 \tag{6-19j}$$

where

$$\{\beta\}^0 = \begin{Bmatrix} \beta_1^0 \\ \beta_2^0 \\ \beta_3^0 \end{Bmatrix} = \alpha \begin{Bmatrix} \Delta T_1 \ell_1 \\ \Delta T_2 \ell_2 \\ \Delta T_3 \ell_3 \end{Bmatrix}$$

$$\{\delta R\} = -\begin{bmatrix} 1 & -\sqrt{2} & 1 \end{bmatrix} \alpha \begin{Bmatrix} \Delta T_1 \ell_1 \\ \Delta T_2 \ell_2 \\ \Delta T_3 \ell_3 \end{Bmatrix}$$

or

$$\{\delta R\} = -100\sqrt{2}\alpha(\Delta T_1 - \Delta T_2 + \Delta T_3)$$
$$\{\delta R\}_{\text{case1}} = -0.187 \tag{6-19k}$$

Likewise, the $\{\delta R\}$ calculated for the temperature increase for case 2 becomes

$$\{\delta R\}_{\text{case2}} = 0 \tag{6-19l}$$

The nontrivial thermal distribution for case 2 represents a compatible temperature distribution that does not induce any stress. For thermal distribution case 1, the IFM equation can be rewritten to include the $\{\delta R\}$ term as follows:

$$\begin{bmatrix} 1/\sqrt{2} & 0 & -1/\sqrt{2} \\ -1/\sqrt{2} & -1 & -1/\sqrt{2} \\ 1 & -1 & 1/2 \end{bmatrix} \begin{Bmatrix} F_1 \\ F_2 \\ F_3 \end{Bmatrix} = \begin{Bmatrix} 0 \\ 0 \\ -39.6 \end{Bmatrix} \tag{6-19m}$$

The compatibility condition in Eq. (6-19*m*) has been scaled with respect to 100/*E*. Solution of the IFM equation yields forces as

$$\begin{Bmatrix} F_1 \\ F_2 \\ F_3 \end{Bmatrix} = -\begin{Bmatrix} -13.59 \\ 19.22 \\ -13.59 \end{Bmatrix}_{\text{kips}} \tag{6-19n}$$

Calculation of Displacement

Displacement can be calculated from the DDR as

$$x_1 = \sqrt{2}\beta_1 - \beta_2$$

$$\beta_1 = \beta_1^e + \beta_1^t \qquad \text{and} \qquad \beta_2 = \beta_2^e + \beta_2^t$$

upon substitution,

$$x_1 = -0.155\,\text{in.}$$

$$x_2 = -\beta_2 = -\left(\beta_2^e + \beta_2^t\right) = -0.196\,\text{in.} \tag{6-19o}$$

The compatible temperature, thermal load case 2, produces trivial forces ($F_1 = F_2 = F_3 = 0$) and reactions, but nonzero displacements, which are also calculated from the DDR:

$$\{\beta\} = \{\beta\}^e + \{\beta\}^t = \{\beta\}^t = \begin{Bmatrix} 0.0933 \\ -0.132 \\ -0.2800 \end{Bmatrix}$$

$$x_1 = \sqrt{2}\,\beta_1^t - \beta_2^t = 0.264\,\text{in.}$$

$$x_2 = \beta_2^t = 0.132\,\text{in.} \tag{6-19p}$$

Load Case 3—Solution for Support Settling

The $\{\delta R\}$ is modified to account for settling of support node 4 by $= \Delta = 1$ in. along the y-coordinate direction:

$$\{\beta\}^0 = -[B_R]^T\{\bar{x}\} = -\begin{Bmatrix} 0 \\ 0 \\ \dfrac{1}{\sqrt{2}} \end{Bmatrix}\{1\} = \begin{Bmatrix} 0 \\ 0 \\ -\dfrac{1}{\sqrt{2}} \end{Bmatrix}$$

$$\{\delta R\}^0 = -\begin{bmatrix} 1 & -\sqrt{2} & 1 \end{bmatrix}\begin{Bmatrix} 0 \\ 0 \\ -\dfrac{1}{\sqrt{2}} \end{Bmatrix} = \begin{Bmatrix} \dfrac{1}{\sqrt{2}} \end{Bmatrix} \tag{6-19q}$$

$$\begin{bmatrix} 1/\sqrt{2} & 0 & -1/\sqrt{2} \\ -1/\sqrt{2} & -1 & -1/\sqrt{2} \\ 1 & -1 & 1/2 \end{bmatrix}\begin{Bmatrix} F_1 \\ F_2 \\ F_3 \end{Bmatrix} = \begin{Bmatrix} 0 \\ 0 \\ 150{,}000 \end{Bmatrix} \tag{6-19r}$$

The compatibility condition in Eq. (6-19r) has been scaled with respect to $100\sqrt{2}/E$, see Eq. (6-19f). Solution of the IFM equation yields forces as

$$\begin{Bmatrix} F_1 \\ F_2 \\ F_3 \end{Bmatrix} = -\begin{Bmatrix} 51,472 \\ -72,792 \\ 51,472 \end{Bmatrix} \tag{6-19s}$$

Calculation of Displacement

Displacement can be calculated from the DDR as

$$x_1 = \sqrt{2}\beta_1 - \beta_2$$
$$\beta_1 = \beta_1^e + \left(\beta_1^t = 0\right) \qquad \text{and} \qquad \beta_2 = \beta_2^e + \left(\beta_2^t = 0\right)$$

upon substitution

$$x_1 = 0.586\,\text{in.}$$
$$x_2 = -\beta_2 = -\left(\beta_2^e\right) = 0.243\,\text{in.} \tag{6-19t}$$

Reactions are back-calculated from forces:

$$\begin{Bmatrix} R_{2x} \\ R_{2y} \\ R_{3x} \\ R_{3y} \\ R_{4x} \\ R_{4y} \end{Bmatrix} = \begin{Bmatrix} \frac{-F_1}{\sqrt{2}} \\ \frac{F_1}{\sqrt{2}} \\ 0 \\ F_2 \\ \frac{F_3}{\sqrt{2}} \\ \frac{F_3}{\sqrt{2}} \end{Bmatrix} = \begin{Bmatrix} -36.4 \\ 36.4 \\ 0 \\ -72.8 \\ 36.4 \\ 36.4 \end{Bmatrix} \tag{6-19u}$$

The reactions self-equilibrate in x- and y-coordinate directions because there are no external loads.

Theory of Dual Integrated Force Method

The dual Integrated Force Method uses the same set of equations as IFM, such as the equilibrium equations, the deformation displacement relations, force displacement relations, as well as compatibility conditions. In IFMD the nodal displacements are calculated first as a solution to its m-governing equations ($[D]\{X\} = \{P\}$). The square matrix $[D]$ of dimension ($m \times m$) is obtained from two basic IFM matrices, (EE matrix $[B]$, and flexibility matrix $[G]$) as ($[D] = [B][G]^{-1}[B]^T$). The dual matrix $[D]$ is a symmetrical matrix. The forces are back-calculated from the displacement also using a set of equations ($\{F\} = [G]^{-1}[B]^T\{X\} - [G]^{-1}\{\beta\}^0$). The compatibility matrix is not used explicitly but it is satisfied. The equations of IFMD are formulated in longhand and in matrix notation using the three-bar truss Example 6–2. The IFM equations are listed in Table 6-1.

TABLE 6-1 Basic Equations for Three-Bar Truss Example 6-2

Type	*Longhand Notation*	*Matrix Notation*
Equilibrium of forces (EE)	$\frac{F_1}{\sqrt{2}} - \frac{F_3}{\sqrt{2}} = P_x = 50$	$[B]\{F\} = \{P\}$
	$\frac{-F_1}{\sqrt{2}} - F_2 - \frac{F_3}{\sqrt{2}} = P_y = 100$	$[B] = \begin{bmatrix} \frac{1}{\sqrt{2}} & 0 & -\frac{1}{\sqrt{2}} \\ -\frac{1}{\sqrt{2}} & -1 & -\frac{1}{\sqrt{2}} \end{bmatrix}; \quad \{P\} = \begin{Bmatrix} P_x \\ P_y \end{Bmatrix} = \begin{Bmatrix} 50 \\ 100 \end{Bmatrix}; \quad \{F\} = \begin{Bmatrix} F_1 \\ F_2 \\ F_3 \end{Bmatrix}$
Deformation displacement relation (DDR)	$\beta_1 = \beta_1^e + \beta_1^0 = \frac{x_1 - x_2}{\sqrt{2}}$	$\{\beta\} = [B]^T\{X\} = \{\beta\}^e + \{\beta\}^0$
	$\beta_2 = \beta_2^e + \beta_2^0 = -x_2$	$\begin{Bmatrix} \beta_1 \\ \beta_2 \\ \beta_3 \end{Bmatrix} = \begin{bmatrix} \frac{1}{\sqrt{2}} & -\frac{1}{\sqrt{2}} \\ 0 & -1 \\ -\frac{1}{\sqrt{2}} & -\frac{1}{\sqrt{2}} \end{bmatrix} \begin{Bmatrix} x_1 \\ x_2 \end{Bmatrix}; \quad \{X\} = \begin{Bmatrix} x_1 \\ x_2 \end{Bmatrix}$
	$\beta_3 = \beta_3^e + \beta_3^0 = -\frac{(x_1 + x_2)}{\sqrt{2}}$	
Force deformation relation (FDR)	$\beta_1^e = \frac{F_1 \ell_1}{A_1 E} = \frac{100\sqrt{2}F_1}{E}$	$\{\beta\}^e = [G]\{F\}$
	$\beta_2^e = \frac{F_2 \ell_2}{A_2 E} = \frac{100F_2}{E}$	
	$\beta_3^e = \frac{F_3 \ell_3}{A_3 E} = \frac{50\sqrt{2}F_3}{E}$	$[G] = \begin{bmatrix} \frac{\ell_1}{A_1 E_1} & & \\ & \frac{\ell_2}{A_2 E_2} & \\ & & \frac{\ell_3}{A_3 E_3} \end{bmatrix} = \frac{1}{E} \begin{bmatrix} 100\sqrt{2} & & \\ & 100 & \\ & & 50\sqrt{2} \end{bmatrix}$

In dual method IFMD, force is expressed in displacement using the force deformation relations and deformation displacement relations, as given in Table 6-2. The EE are expressed in displacement by eliminating forces between force displacement relation and the EE. For the three-bar truss problem, the equations of IFMD are also given in closed form in Table 6-2. The dual method is numerically illustrated next.

IFMD Solution to Example 6-2

In the dual method IFMD, the displacement is calculated first from the equation ($[D]\{X\} = \{P\} + \{P\}^0$), being the governing equation of IFMD. The two-bar truss has two displacements and $[D]$ is a (2×2) symmetrical matrix. The dual matrix $[D]$ is calculated from the equilibrium matrix $[B]$ and the inverse of the flexibility matrix $[G]$ as follows

$$[D] = [B][G]^{-1}[B]^T = \begin{bmatrix} \frac{1}{\sqrt{2}} & 0 & \frac{-1}{\sqrt{2}} \\ \frac{-1}{\sqrt{2}} & -1 & \frac{-1}{\sqrt{2}} \end{bmatrix} \begin{bmatrix} \frac{A_1E}{\ell\sqrt{2}} & & \\ & \frac{A_2E}{\ell} & \\ & & \frac{A_3E}{\ell\sqrt{2}} \end{bmatrix} \begin{bmatrix} \frac{1}{\sqrt{2}} & -\frac{1}{\sqrt{2}} \\ 0 & -1 \\ -\frac{1}{\sqrt{2}} & -\frac{1}{\sqrt{2}} \end{bmatrix}$$

$$\left(\frac{E}{\ell}\right) \begin{bmatrix} \frac{1}{\sqrt{2}} & 0 & -\frac{1}{\sqrt{2}} \\ -\frac{1}{\sqrt{2}} & -1 & -\frac{1}{\sqrt{2}} \end{bmatrix} \begin{bmatrix} \frac{1}{2} & -\frac{1}{2} \\ 0 & -1 \\ -1 & -1 \end{bmatrix} = \left(\frac{E}{\ell}\right) \begin{bmatrix} \frac{3}{2\sqrt{2}} & \frac{+1}{2\sqrt{2}} \\ \frac{1}{2\sqrt{2}} & \frac{3+2\sqrt{2}}{2\sqrt{2}} \end{bmatrix} = \begin{bmatrix} 3.18 & 1.06 \\ 1.06 & 6.18 \end{bmatrix} \times 10^5 \quad (6\text{-}20a)$$

The dual matrix $[D]$ is a (2×2) symmetrical matrix. It remains the same for mechanical, thermal, and support settling load cases. The right side of the governing equation ($[D]\{X\} = \{P\} + \{P\}^0$) changes depending on the nature of the load.

Load Case 1—Solution for Mechanical Load

The right side of the dual equation is the mechanical load $\{P\}$ and the contribution from initial deformation ($\{P\}^0 = \{0\}$) is set to zero.

$$\{P\} = \begin{Bmatrix} 50{,}000 \\ 100{,}000 \end{Bmatrix}_{\text{lbf}}$$

The IFMD equation becomes

$$10^5 \begin{bmatrix} 3.18 & 1.06 \\ 1.06 & 6.18 \end{bmatrix} \begin{Bmatrix} x_1 \\ x_2 \end{Bmatrix} = \begin{Bmatrix} 50{,}000 \\ 100{,}000 \end{Bmatrix} \quad (6\text{-}20b)$$

$$\begin{Bmatrix} x_1 \\ x_2 \end{Bmatrix} = \begin{Bmatrix} 0.110 \\ 0.143 \end{Bmatrix}_{\text{in.}} \quad (6\text{-}20c)$$

Forces, in the dual method, are obtained from the equation ($\{F\} = [G]^{-1}[B]^T\{X\}$) as

$$\begin{Bmatrix} F_1 \\ F_2 \\ F_3 \end{Bmatrix} = \frac{E}{\ell\sqrt{2}} \begin{bmatrix} 1 & & \\ & \sqrt{2} & \\ & & 2 \end{bmatrix} \begin{bmatrix} \frac{1}{\sqrt{2}} & -\frac{1}{\sqrt{2}} \\ 0 & -1 \\ -\frac{1}{\sqrt{2}} & -\frac{1}{\sqrt{2}} \end{bmatrix} \begin{Bmatrix} 0.110 \\ 0.143 \end{Bmatrix} = -\begin{Bmatrix} 5.025 \\ 42.893 \\ 75.736 \end{Bmatrix}_{\text{kip}} \quad (6\text{-}20d)$$

TABLE 6-2 IFMD Equations for Three Bar Truss Example 6-2

Type	*Matrix Notation*	*Longhand Notation*
Eliminate deformation between DDR and FDR to obtain force displacement relation	$\{\beta\}^e = [G]\{F\} = [B]^T\{X\} - \{\beta\}^0$	$\beta_1^e = \frac{F_1\ell_1}{A_1E} = \frac{100\sqrt{2}F_1}{E} = \frac{x_1 - x_2}{\sqrt{2}} - \beta_1^0$
	$\{F\} = [G]^{-1}\left\{[B]^T\{X\} - [G]^{-1}\{\beta\}^0\right\}$	$\beta_2^e = \frac{F_2\ell_2}{A_2E} = \frac{100F_2}{E} = -x_2 - \beta_2^0$
		$\beta_3^e = \frac{F_3\ell_3}{A_3E} = \frac{50\sqrt{2}F_3}{E} = -\frac{(x_1+x_2)}{\sqrt{2}} - \beta_3^0$
		$F_1 = \frac{E}{200}(x_1 - x_2) - \frac{E}{100\sqrt{2}}\beta_1^0$
		$F_2 = -\frac{E}{100}(x_2) - \frac{E}{100}\beta_2^0$
		$F_3 = -\frac{E}{100}(x_1 + x_2) - \frac{E}{50\sqrt{2}}\beta_3^0$
Governing equation of IFMD is obtained by writing EE ($[B]\{F\}$) displacement	$[B][G]^{-1}[B]^T\{X\} - [B][G]^{-1}\{\beta\}^0 = \{P\}$	$\frac{E}{200\sqrt{2}}(3x_1 + x_2) = 50 + \frac{E}{200}\left(\beta_1^0 - 2\beta_3^0\right)$
	$[D]\{X\} = \{P\} + \{P\}^0$	
	$[D] = [B][G]^{-1}[B]^T; \{P\}^0 = [B][G]^{-1}\{\beta\}^0$	$\frac{E}{200\sqrt{2}}\left[x_1 + \left(3 + 2\sqrt{2}\right)\right] = 100 - \frac{E}{200}\left(\beta_1^0 + 2\beta_2^0 + 2\beta_3^0\right)$
Recover forces from force displacement relations	$\{F\} = [G]^{-1}\left\{[B]^T\{X\} - [G]^{-1}\{\beta\}^0\right\}$	

Solution yields x_1 and x_2.
Forces are back-calculated.

The displacements and forces obtained by IFMD are in agreement with the IFM solution. Calculation of reactions and other variables follow the IFM procedure.

Load Case 2—Solution for Thermal Load

An equivalent load (P^t) is calculated for the temperature change as

$$\{P^t\} = [B][G]^{-1}\{\beta^0\}$$

where

$$\{\beta^0\} = \begin{Bmatrix} \alpha\Delta T_1\ell_1 \\ \alpha\Delta T_2\ell_2 \\ \alpha\Delta T_3\ell_3 \end{Bmatrix}$$

$$\{P^t\} = \begin{bmatrix} \frac{1}{\sqrt{2}} & 0 & -\frac{1}{\sqrt{2}} \\ -\frac{1}{\sqrt{2}} & -1 & -\frac{1}{\sqrt{2}} \end{bmatrix} \begin{bmatrix} \frac{A_1E_1}{\ell_1} & & \\ & \frac{A_2E_2}{\ell_2} & \\ & & \frac{A_3E_3}{\ell_3} \end{bmatrix} \begin{Bmatrix} \alpha\Delta T_1\ell_1 \\ \alpha\Delta T_2\ell_2 \\ \alpha\Delta T_3\ell_3 \end{Bmatrix}$$

$$= \begin{bmatrix} \frac{1}{\sqrt{2}} & 0 & -\frac{1}{\sqrt{2}} \\ -\frac{1}{\sqrt{2}} & -1 & -\frac{1}{\sqrt{2}} \end{bmatrix} \begin{Bmatrix} (AE\alpha\Delta T)_1 \\ (AE\alpha\Delta T)_2 \\ (AE\alpha\Delta T)_3 \end{Bmatrix} = E\alpha \begin{Bmatrix} \frac{1}{\sqrt{2}}(\Delta T_1 - 2\Delta T_3) \\ -\frac{1}{\sqrt{2}}\left(\Delta T_1 + \sqrt{2}\Delta T_2 + 2\Delta T_3\right) \end{Bmatrix}$$

Since, $E\alpha/\sqrt{2} = 140$, the thermal load for the problem becomes

$$\{P^t\} = 140\begin{Bmatrix} (\Delta T_1 - 2\Delta T_3) \\ -\left(\Delta T_1 + \sqrt{2}\Delta T_2 + 2\Delta T_3\right) \end{Bmatrix} \tag{6-20e}$$

The temperature load for the two thermal loads becomes

$$\{P^t\}_{\text{case1}} = 140\begin{Bmatrix} 100 - 600 \\ -\left(100 + 200\sqrt{2} + 600\right) \end{Bmatrix} = \begin{Bmatrix} -7.0 \\ -13.76 \end{Bmatrix}_{\text{lbf}} \times 10^4 \tag{6-20f}$$

$$\{P^t\}_{\text{case2}} = 140\begin{Bmatrix} 100 - 600 \\ -\left(100 - 200\sqrt{2} - 600\right) \end{Bmatrix} = \begin{Bmatrix} 9.8 \\ 10.96 \end{Bmatrix} \times 10^4 \tag{6-20g}$$

Displacements for both thermal load cases are obtained as a solution to the IFMD equation.

$$10^5 \times \begin{bmatrix} 3.18 & 1.06 \\ 1.06 & 6.18 \end{bmatrix} \begin{Bmatrix} x_1 \\ x_2 \end{Bmatrix} = \begin{Bmatrix} -7.0 \\ -13.76 \end{Bmatrix}^{\text{case1}} \times 10^4; \begin{Bmatrix} 9.8 \\ 10.96 \end{Bmatrix}^{\text{case2}} \times 10^4 \tag{6-20h}$$

The displacements are

$$\begin{Bmatrix} x_1 \\ x_2 \end{Bmatrix}_{\text{case1}} = \begin{Bmatrix} -0.155 \\ -0.196 \end{Bmatrix}_{\text{in.}}; \quad \begin{Bmatrix} x_1 \\ x_2 \end{Bmatrix}_{\text{case2}} = \begin{Bmatrix} 0.264 \\ 0.132 \end{Bmatrix}_{\text{in.}} \tag{6-20i}$$

The forces, in the dual method, are calculated from the formula

$$\{F\} = [G]^{-1}\{[B]^T\{X\} - \{\beta^0\}\}$$

$$\{\beta\} = [B]^T\{X\} = \begin{Bmatrix} \frac{(x_1 - x_2)}{\sqrt{2}} \\ -x_2 \\ -\frac{(x_1 + x_2)}{\sqrt{2}} \end{Bmatrix}; \{\beta_0\}^{\text{case1}} = \begin{Bmatrix} 9.33 \\ 13.20 \\ 28.00 \end{Bmatrix} \times 10^{-2}; \{\beta_a\}^{\text{case2}} = \begin{Bmatrix} 9.33 \\ -13.20 \\ -28.00 \end{Bmatrix} \times 10^{-2}$$

$$\{\beta\}^{\text{case1}} = \begin{Bmatrix} 2.93 \\ 19.6 \\ 24.82 \end{Bmatrix} \times 10^{-2} \qquad \text{and} \qquad \{\beta\}^{\text{case2}} = \begin{Bmatrix} 9.33 \\ -13.2 \\ -28.00 \end{Bmatrix} \times 10^{-2}$$

$$\{\beta\}^{e-\text{case1}} = \begin{Bmatrix} 2.93 - 9.33 \\ 19.6 - 13.2 \\ 24.82 - 28.00 \end{Bmatrix} \times 10^{-2} = \begin{Bmatrix} -6.4 \\ 6.40 \\ -3.20 \end{Bmatrix} \times 10^{-2}$$

$$\{F\} = [G]^{-1}\{\beta\}^e = 30 \times 10^6 \begin{Bmatrix} -\dfrac{6.40 \times 10^{-2}}{100\sqrt{2}} \\ \dfrac{6.40 \times 10^{-2}}{100} \\ -\dfrac{3.20 \times 2 \times 10^{-2}}{100\sqrt{2}} \end{Bmatrix} = \begin{Bmatrix} -13.59 \\ 19.22 \\ -13.59 \end{Bmatrix}_{\text{kip}} \tag{6-20j}$$

$$\{\beta\}^{e\text{-case2}} = \begin{Bmatrix} 9.33 - 9.33 \\ -13.2 + 13.20 \\ -28.0 + 28.0 \end{Bmatrix} \times 10^{-2} = \begin{Bmatrix} 0.0 \\ 0.0 \\ 0.0 \end{Bmatrix} \tag{6-20k}$$

No force is induced in the bars ($\{F\} = \{0\}$) because the elastic deformation is zero ($\{\beta\}^e = \{0\}$).

Load Case 3—Settling of Support

The initial deformation due to the settling of support calculated earlier for the IFM solution is valid even for the dual method.

$$\{\beta\}^0 = -[B_R]^T\{\bar{X}\} = \begin{Bmatrix} 0 \\ 0 \\ -1/\sqrt{2} \end{Bmatrix}$$

The load induced by the support settling is

$$\{P\}_s = [B][G]^{-1}\{\beta\}^0$$

$$\{P\}_s = \begin{bmatrix} \frac{1}{\sqrt{2}} & 0 & -\frac{1}{\sqrt{2}} \\ -\frac{1}{\sqrt{2}} & -1 & -\frac{1}{\sqrt{2}} \end{bmatrix} \begin{bmatrix} \frac{A_1E}{\ell_1} & & \\ & \frac{A_2E}{\ell_2} & \\ & & \frac{A_3E}{\ell_3} \end{bmatrix} \begin{Bmatrix} 0 \\ 0 \\ -\frac{1}{\sqrt{2}} \end{Bmatrix}$$

$$= \begin{bmatrix} \frac{1}{\sqrt{2}} & 0 & -\frac{1}{\sqrt{2}} \\ -\frac{1}{\sqrt{2}} & -1 & -\frac{1}{\sqrt{2}} \end{bmatrix} \begin{Bmatrix} 0 \\ 0 \\ -\frac{A_3E}{\ell_3\sqrt{2}} \end{Bmatrix} = \left(-\frac{A_3E}{2\ell_3}\right)\begin{Bmatrix} 1 \\ 1 \end{Bmatrix} = \begin{Bmatrix} 212.13 \\ 212.13 \end{Bmatrix}_{\text{kip}} \tag{6-20l}$$

The equation of the dual method becomes

$$10^5\begin{bmatrix} 3.18 & 1.06 \\ 1.06 & 6.18 \end{bmatrix}\begin{Bmatrix} x_1 \\ x_2 \end{Bmatrix} = \begin{Bmatrix} 212{,}130 \\ 212{,}130 \end{Bmatrix} \tag{6-20m}$$

Solution to Eq. (6-20m) yields the displacements.

$$\begin{Bmatrix} x_1 \\ x_2 \end{Bmatrix} = \begin{Bmatrix} 0.585 \\ 0.242 \end{Bmatrix}_{\text{in.}} \tag{6-20n}$$

Total deformations $\{\beta\}$ are obtained as

$$\begin{Bmatrix} \beta_1 \\ \beta_2 \\ \beta_3 \end{Bmatrix} = \begin{Bmatrix} \frac{x_1-x_2}{\sqrt{2}} \\ -x_2 \\ -\frac{(x_1+x_2)}{\sqrt{2}} \end{Bmatrix} = \begin{Bmatrix} 0.242 \\ -0.242 \\ -0.585 \end{Bmatrix} \tag{6-20o}$$

The elastic deformations ($\{\beta\}^e = \{\beta\} - \{\beta\}^0$) are

$$\begin{Bmatrix} \beta_1 \\ \beta_2 \\ \beta_3 \end{Bmatrix}^e = \begin{Bmatrix} 0.242 \\ -0.242 \\ 0.121 \end{Bmatrix}$$

The member force are

$$\{F\} = [G]^{-1}\{\beta\}^e = \begin{Bmatrix} 51.47 \\ -72.80 \\ 51.47 \end{Bmatrix}_{\text{kip}} \tag{6-20p}$$

Theory of Stiffness Method

The stiffness method is quite similar to the dual Integrated Force Method. Its governing equation, also called the stiffness equation ($[K]\{X\} = \{P\}$) resembles IFMD equation ($[D]\{X\} = \{P\}$). For strength of materials problems the two matrices are equal identically, ($[K] = [D]$). In the stiffness method a bar force (F) is expressed in terms of the displacements of its nodes, or in terms of four displacement components, consisting of (u_1, v_1) at node 1 and (u_2, v_2) at node 2. The force equilibrium equation ($[B]\{F\} = \{P\}$) is obtained in terms of displacement, and this yields the stiffness equation. The stiffness method is illustrated considering the three-bar truss shown in Fig. 6-4 as an example. The force (F) and nodal displacements (u_1, v_1, u_2, v_2) for a truss bar shown in Fig. 6-5 are related in the following steps.

Axial displacements u_{1a} and u_{2a} are obtained by projecting the nodal displacements (u_1, v_1 and u_2, v_2) along the bar axis as shown in Fig. 6-5.

$$u_{1a} = u_1 \cos\theta + v_1 \sin\theta \tag{6-21a}$$

$$u_{2a} = u_2 \cos\theta + v_2 \sin\theta \tag{6-21b}$$

The deformation (β) in the bar is obtained as the difference between the axial displacements (u_{1a} and u_{2a}).

$$\beta = u_{2a} - u_{1a} = (u_2 - u_1)\cos\theta + (v_2 - v_1)\sin\theta \tag{6-21c}$$

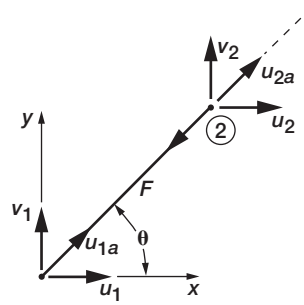

FIGURE 6-5 *Truss bar.*

The strain (ε) in the bar of length (ℓ) is obtained as

$$\varepsilon = \beta/\ell \tag{6-21d}$$

The stress (σ) is obtained from Hooke's law

$$\sigma = \mathrm{E}\varepsilon \tag{6-21e}$$

The bar force (F) is calculated as

$$F = A\mathrm{E}\varepsilon \tag{6-21f}$$

The bar force is expressed in displacements

$$F = \frac{AE}{\ell}(u_{2a} - u_{1a}) = \left(\frac{AE}{\ell}\right)\{(u_2 - u_1)\cos\theta + (v_2 - v_1)\sin\theta\} \tag{6-21g}$$

The bar force (F) is resolved along the displacement directions to obtain four components (F_{x1}, F_{y1}, F_{x2}, F_{x2}) along the displacement directions (u_1, u_2, u_3, u_4), respectively.

$$\text{Along } u_1\text{:} \quad F_{x1} = F\cos\theta = \frac{AE}{\ell}\left\{(u_2 - u_1)\cos^2\theta + (v_2 - v_1)\sin\theta\cos\theta\right\} \tag{6-21h}$$

$$\text{Along } v_1\text{:} \quad F_{y1} = F\sin\theta = \frac{AE}{\ell}\left\{(u_2 - u_1)\sin\theta\cos\theta + (v_2 - v_1)\sin^2\theta\right\} \tag{6-21i}$$

$$\text{Along } u_2\text{:} \quad F_{x2} = -F\cos\theta = \frac{-AE}{\ell}\left\{(u_2 - u_1)\cos^2\theta + (v_2 - v_1)\sin\theta\cos\theta\right\} \tag{6-21j}$$

$$\text{Along } v_2\text{:} \quad F_{y2} = -F\sin\theta = \frac{-AE}{\ell}\left\{(u_2 - u_1)\sin\theta\cos\theta + (v_2 - v_1)\sin^2\theta\right\} \tag{6-21k}$$

The EE at a node of a truss is obtained as the summation of all bar forces and load at that node. The m-EE of the truss is expressed in displacements because bar force is written in that variable. These m-EE in displacement become the stiffness equations. Consider next the example of the three-bar truss (Example 6-1) shown in Fig. 6-4. As before, the nodal EE should be written along the displacement degrees of freedom, or along x_1 and x_2 displacements as depicted in Fig. 6-6.

The EE along the x_1 direction obtained from the contribution of the three-bars after suppressing the boundary displacements as shown in Fig. 6-6 is

$$\text{Bar 1: } u_1 = x_1, v_1 = x_2, u_2 = 0, v_2 = 0, \theta = 135^\circ, A_1 = 1, \ell_1 = 100\sqrt{2}, \text{and } \mathrm{E} = 30 \times 10^6$$

$$F_{x1}^1 = 0.21 \times 10^6(-0.5x_1 + 0.5x_2) \tag{6-21l}$$

Bar 2: This bar has no contribution to the EE along the $x_1$direction because $\theta = 90^\circ$.

$$\text{Bar 3: } u_1 = x_1, v_1 = x_2, u_2 = v_2 = 0, \theta = 45^\circ, A_3 = 2, \ell_2 = 100\sqrt{2}, \text{and } \mathrm{E} = 30 \times 10^6$$

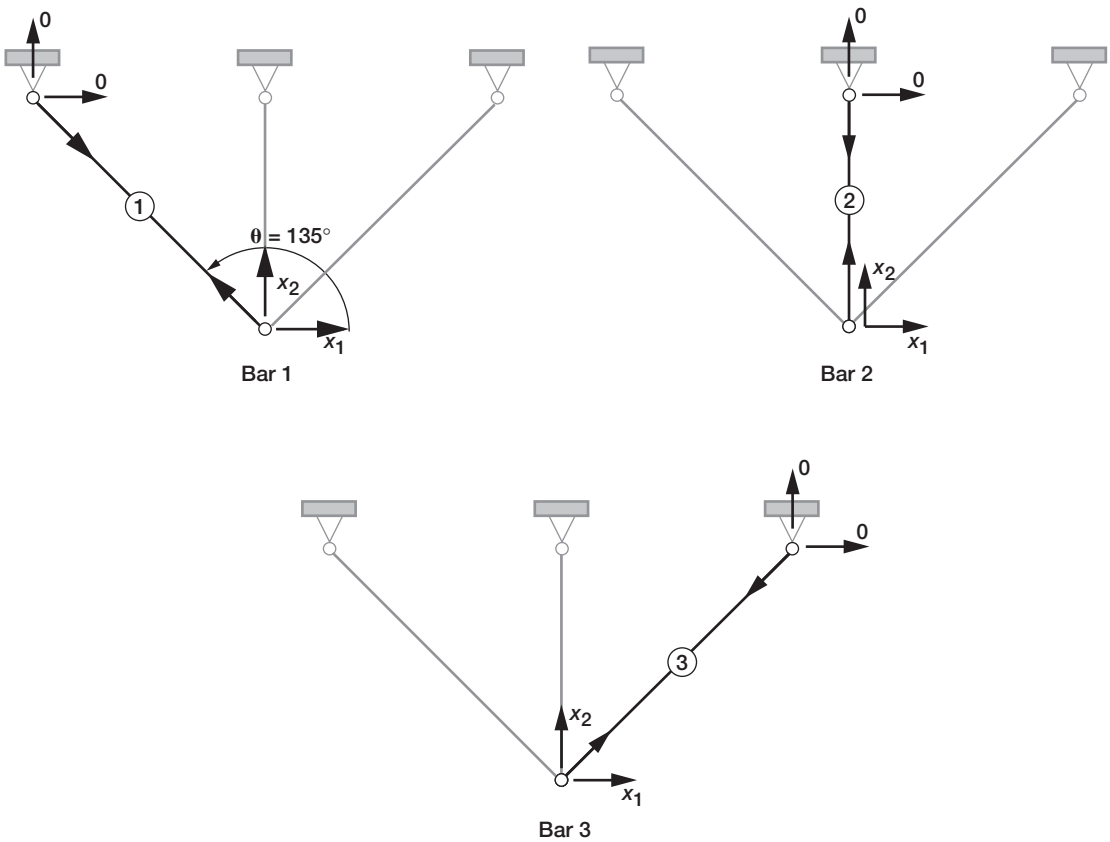

FIGURE 6-6 *Three-bar truss model for stiffness method.*

$$F_{x1}^{3} = 0.42 \times 10^{6}(-0.5x_1 - 0.5x_2) \tag{6-21m}$$

The EE at node 1 along x_1 is

$$F_{x1}^{1} + F_{x1}^{3} + P_x = 0 \tag{6-21n}$$

or

$$0.21 \times 10^{6}(-1.5x_1 - 0.5x_2) + 50{,}000 = 0$$

Likewise, the EE along the x_2 direction is obtained as contributions from the three bars.

$$F_{x2}^{1} = 0.21 \times 10^{6}(0.5x_1 - 0.5x_2) \tag{6-21o}$$

$$F_{x2}^{2} = 0.3 \times 10^{6}(-x_2) \tag{6-21p}$$

$$F_{x2}^{3} = 0.42 \times 10^{6}(-0.5x_1 - 0.5x_2) \tag{6-21q}$$

The EE at node 1 along x_2 is

$$F_{x2}^{1} + F_{x2}^{2} + F_{x3}^{3} + P_y = 0 \tag{6-21r}$$

or

$$0.21 \times 10^{6}(-0.5x_1 - 2.93x_2) + 100{,}000 = 0$$

The stiffness equation is obtained by coupling the EE along the x_1 and x_2 directions.

$$10^5 \times \begin{bmatrix} 3.18 & 1.06 \\ 1.06 & 6.18 \end{bmatrix} \begin{Bmatrix} x_1 \\ x_2 \end{Bmatrix} = \begin{Bmatrix} 50{,}000 \\ 100{,}000 \end{Bmatrix} \tag{6-22a}$$

The equations of the stiffness method and IFMD are identical.
Solution of the stiffness equation yields the displacements:

$$\begin{Bmatrix} x_1 \\ x_2 \end{Bmatrix} = \begin{Bmatrix} 0.110 \\ 0.143 \end{Bmatrix}_{\text{in.}}$$

Bar forces are calculated from Eq. (6-21g) as

$$F_1 = \left(\frac{AE}{\ell}\right)_1 \{-x_1 \cos 135 - x_2 \sin 135\}$$

$$= 0.21 \times 10^{6}\left(+\frac{0.110}{\sqrt{2}} - \frac{0.143}{\sqrt{2}}\right) = -5.025\,\text{kip} \tag{6-22b}$$

$$F_2 = \left(\frac{AE}{\ell}\right)_2 (-x_2) = -42.89\,\text{kip} \tag{6-22c}$$

$$F_3 = \left(\frac{AE}{\ell}\right)_3 \left(-\frac{x_1}{\sqrt{2}} - \frac{x_2}{\sqrt{2}}\right) = -75.73\,\text{kip} \tag{6-22d}$$

Adding the temperature strain in Hooke's law accommodates the thermal load. This is accomplished by rewriting Hooke's law to account for the temperature variation.

$$\sigma = E(\varepsilon - \varepsilon^t) = E(\varepsilon - \alpha\Delta T) \tag{6-23a}$$

$$F = \sigma A = AE\varepsilon - AE\alpha\Delta T = \frac{AE\beta}{\ell} - AE\alpha\Delta T \tag{6-23b}$$

The bar force in displacements is obtained by adding the thermal contribution into Eq. (6-21g).

$$F = \frac{AE}{\ell}\{(u_2 - u_1)\cos\theta + (v_2 - v_1)\sin\theta\} - AE\alpha\Delta T \tag{6-23c}$$

Likewise, the bar force is resolved along the displacement directions adding thermal terms in Eq. (6-21) to obtain

$$\text{Along } u_1\text{: } F_{x1} = \frac{AE}{\ell}\left\{(u_2 - u_1)\cos^2\theta + (v_2 - v_1)\sin\theta\cos\theta\right\} - AE\alpha\Delta T\cos\theta \tag{6-23d}$$

$$\text{Along } v_1\text{: } F_{y1} = \frac{AE}{\ell}\left\{(u_2 - u_1)\sin\theta\cos\theta + (v_2 - v_1)\sin^2\right\} - AE\alpha\Delta T\sin\theta \tag{6-23e}$$

$$\text{Along } u_2\text{: } F_{x2} = -\frac{AE}{\ell}\left\{(u_2 - u_1)\cos^2\theta + (v_2 - v_1)\sin\theta\cos\theta\right\} + AE\alpha\Delta T\cos\theta \tag{6-23f}$$

$$\text{Along } v_2\text{: } F_{x2} = -\frac{AE}{\ell}\left\{(u_2 - u_1)\sin\theta\cos\theta + (v_2 - v_1)\sin^2\theta\right\} + AE\alpha\Delta T\sin\theta \tag{6-23g}$$

Compare Eqs. (6-21h) to (6-21k) with Eqs. (6-23d) to (6-23g), for mechanical and thermal loads, respectively. The thermal load case retains all terms for mechanical load while adding the contribution due to temperature change. The added term is called equivalent thermal load $\{P\}^{th}$ due to temperature variation.

The thermal load for a bar is obtained as

$$\{P\}^{th} = AE\alpha\Delta T\begin{Bmatrix} -\cos\theta \\ -\sin\theta \\ \cos\theta \\ \sin\theta \end{Bmatrix} \tag{6-23h}$$

First Thermal Load

Calculation of the thermal load at a node is illustrated considering the three-bar truss as an example. The EE for thermal load at node 1 along the x_1-direction is obtained by adding the contributions from the bars along x_1: $P^{\text{th1}} + P^{\text{th2}} + P^{\text{th3}}$.

The contribution from bar 1 is obtained by setting $\theta = \theta_1 = 135°$, $\Delta T_1 = 100\,°\text{F}$, and $A_1 = 1.0$ in Eq. (6-23*h*).

$$\text{Along } x_1\text{: } P^{\text{th1}} = (AE\alpha)_1(100)(-\cos 135°) = 50\sqrt{2}\ E\alpha$$
$$\text{Along } x_2\text{: } P^{\text{th2}} = (AE\alpha)_1(100)(-\sin 135°) = -50\sqrt{2}\ E\alpha$$

The contributions from bar 2 are

$$\text{Along } x_1\text{: } P^{\text{th2}} = (E\alpha)(200)(0) = 0$$
$$\text{Along } x_2\text{: } P^{\text{th2}} = (E\alpha)(200)(-1) = -200\ E\alpha$$

The contributions from bar 3 are

$$\text{Along } x_1\text{: } P^{\text{th3}} = 2\ E\alpha(300) \times (-1/\sqrt{2}) = -300\sqrt{2}\ E\alpha$$
$$\text{Along } x_2\text{: } P^{\text{th2}} = 2E\alpha(300) \times (-1/\sqrt{2}) = -300\sqrt{2}\ E\alpha$$

The thermal load for the truss is obtained by adding the contributions from the three bars:

$$\begin{aligned} p^{t\ell-x1} &= p^{th1} + p^{th2} + p^{th3} \\ &= E\alpha\left(50\sqrt{2} - 300\sqrt{2}\right) = -250\sqrt{2}E\alpha \\ p^{t\ell-x2} &= p^{th1} + p^{th2} + p^{th3} \\ &= E\alpha\left(-50\sqrt{2} - 200 - 300\sqrt{2}\right) = -\left(200 + 350\sqrt{2}\right)E\alpha \end{aligned}$$

$$\left\{P^{t\ell}\right\} = \begin{Bmatrix} -7.0 \times 10^4 \\ -13.76 \times 10^4 \end{Bmatrix}_{\text{lbf}}$$

The stiffness equation for thermal load becomes

$$10^5 \begin{bmatrix} 3.18 & 1.06 \\ 1.06 & 6.18 \end{bmatrix} \begin{Bmatrix} x_1 \\ x_2 \end{Bmatrix} = -\begin{Bmatrix} -7.0 \times 10^4 \\ -13.76 \times 10^4 \end{Bmatrix} \tag{6-23i}$$

The displacement solution for thermal load is

$$\begin{Bmatrix} x_1 \\ x_2 \end{Bmatrix} = -\begin{Bmatrix} 0.155 \\ 0.196 \end{Bmatrix}_{\text{in.}} \tag{6-23j}$$

The bar forces are back-calculated from Eq. (6-23c) as follows:
For bar 1: $u_1 = x_1$, $v_1 = x_2$, and $u_2 = v_2 = 0$.

$$F_1 = \left(\frac{AE}{\ell}\right)_1 \{(-x_1)\cos(135) + (-x_2)\sin(135)\} - (AE\alpha\Delta T)_1$$
$$= 0.2121 \times 10^6(-0.1096 + 0.1386) - 1.98 \times 10^4$$

or $$F_1 = -13.59\,\text{kip}$$

Likewise, forces F_2 and F_3 are calculated.

$$F_2 = \left(\frac{AE}{\ell}\right)_2 (-x_1) - (AE\alpha\Delta T)_2 = 19.22\,\text{kip}$$
$$F_3 = \left(\frac{AE}{\ell}\right)_3 \left\{\left(\frac{x_1 + x_2}{\sqrt{2}}\right)\right\} - (AE\alpha\Delta T)_2 = -13.59\,\text{kip}$$

The bar forces for the change in temperature, case 1, are

$$\begin{Bmatrix} F_1 \\ F_2 \\ F_3 \end{Bmatrix}^{\text{case 1}} = \begin{Bmatrix} -13.59 \\ 19.22 \\ -13.59 \end{Bmatrix}_{\text{kip}} \tag{6-23k}$$

Second Thermal Load

The response for the second thermal load is obtained following the procedure given for the first thermal load. The thermal load obtained is

$$\{P\}^{\text{case 2}} = \begin{Bmatrix} 98.00 \\ 109.60 \end{Bmatrix}_{\text{kip}}$$

The stiffness equations are

$$10^5 \begin{bmatrix} 3.18 & 1.06 \\ 1.06 & 6.18 \end{bmatrix} \begin{Bmatrix} x_1 \\ x_2 \end{Bmatrix} = \begin{Bmatrix} 98.00 \\ 109.60 \end{Bmatrix} \times 10^3 \tag{6-24a}$$

The displacement solution is

$$\begin{Bmatrix} x_1 \\ x_2 \end{Bmatrix} = \begin{Bmatrix} 0.264 \\ 0.132 \end{Bmatrix}_{\text{in.}} \tag{6-24b}$$

The forces back-calculated from the displacements are zero.

$$\begin{Bmatrix} F_1 \\ F_2 \\ F_3 \end{Bmatrix} = \begin{Bmatrix} 0.0 \\ 0.0 \\ 0.0 \end{Bmatrix} \tag{6-24c}$$

The thermal load induced displacements but not force in the truss bar.

Stiffness Method for Support Settling

Support settling is accommodated by adding the specified initial displacement $(\bar{x})$ in the force displacement relation. Let us assume that the specified displacement for a bar are

$$\begin{aligned} u_1^t &= u_1 + \bar{u}_1 \\ u_2^t &= u_2 + \bar{u}_2 \\ v_1^t &= v_1 + \bar{v}_1 \\ v_2^t &= v_2 + \bar{v}_2 \end{aligned} \tag{6-25a}$$

Here, the total displacement (u^t) is composed of the unknown displacement (u) and the prescribed displacement $(\bar{u})$. The bar force in displacements becomes

$$F = \frac{AE}{\ell}\left(u_2^t - u_1^t\right)\cos\theta + \left(v_2^t - v_1^t\right)\sin\theta \tag{6-25b}$$

The components of the bar force along the displacement components become

$$\begin{aligned} \text{Along } u_1\text{: } F_{x1} &= \left(\frac{AE}{\ell}\right)\left\{\left(u_2^t - u_1^t\right)\cos^2\theta + \left(v_2^t - v_1^t\right)\sin\theta\cos\theta\right\} \\ \text{Along } v_1\text{: } F_{y1} &= \left(\frac{AE}{\ell}\right)\left\{\left(u_2^t - u_1^t\right)\sin\theta\cos\theta + \left(v_2^t - v_1^t\right)\sin^2\theta\right\} \\ \text{Along } u_2\text{: } F_{x2} &= \left(\frac{AE}{\ell}\right)\left\{\left(u_2^t - u_1^t\right)\cos^2\theta + \left(v_2^t - v_1^t\right)\sin\theta\cos\theta\right\} \\ \text{Along } v_2\text{: } F_{y2} &= \left(\frac{AE}{\ell}\right)\left\{\left(u_2^t - u_1^t\right)\sin\theta\cos\theta + \left(v_2^t - v_1^t\right)\sin^2\theta\right\} \end{aligned} \tag{6-25c}$$

The subsequent analysis method proceeds inline with the mechanical load. The method is illustrated for the three-bar truss with the settling of support node 4 by 1 in. along y-coordinate direction: $\bar{v}_4 = 1.0$ in.

The force components for bar 1 along the displacement directions x_1 and x_2 are obtained as before because initial displacement at node 4 has no effect for this bar.

$$\begin{aligned} F_{x1}^1 &= 0.21 \times 10^6(-0.5x_1 + 0.5x_2) \\ F_{x2}^1 &= 0.21 \times 10^6(0.5x_1 - 0.5x_2) \end{aligned}$$

Likewise for bar 2, they are

$$F_{x1}^2 = 0$$
$$F_{x2}^2 = 0.3 \times 10^6(-x_2)$$

The settling of support node 4 affects the force displacement relationship for bar 3. Its parameters are

$$\begin{aligned}
u_1^t &= x_1 \\
v_1^t &= x_2 \\
u_4^t &= 0 \\
v_4^t &= 1.0\,\text{in. (is the preassigned displacement)} \\
F_{x1}^3 &= 0.42 \times 10^6(-0.5x_1 - 0.5x_2 + 0.5) \\
F_{x2}^3 &= 0.42 \times 10^6(-0.5x_1 - 0.5x_2 + 0.5)
\end{aligned}$$

The EE along the displacement directions x_1 and x_2 are obtained as

$$\begin{aligned}
F_{x1}^1 + F_{x1}^2 + F_{x1}^3 + (P_{x1} = 0) = 0 \\
F_{x2}^1 + F_{x2}^2 + F_{x2}^3 + (P_{x2} = 0) = 0
\end{aligned} \tag{6-25d}$$

The EE in displacement variables become

$$0.21 \times 10^6(-0.5x_1 + 0.5x_2 - x_1 - x_2 + 1) = 0$$
$$0.21 \times 10^6(0.5x_1 - 0.5x_2 - 1.44x_2 - x_1 - x_2 + 1) = 0$$

The EE has the following form in the matrix notation:

$$10^5 \begin{bmatrix} 3.18 & 1.06 \\ 1.06 & 6.18 \end{bmatrix} \begin{Bmatrix} x_1 \\ x_2 \end{Bmatrix} = \begin{Bmatrix} 0.21 \\ 0.21 \end{Bmatrix} \times 10^6 \tag{6-25e}$$

The prescribed displacement is included in the stiffness equation as an equivalent load. The solution of the stiffness equation yields the two displacement components (x_1 and x_2). The displacements including the prescribed displacement become

$$\begin{Bmatrix} x_1 \\ x_2 \\ x_3^b \end{Bmatrix} = \begin{Bmatrix} 0.585 \\ 0.242 \\ 1.0 \end{Bmatrix}_{\text{in.}} \tag{6-25f}$$

Bar forces are back-calculated from displacements

$$F_1 = 0.21 \times 10^6 \left(\frac{0.585 - 0.242}{\sqrt{2}} \right) = 51.47\,\text{kip}$$

$$F_2 = 0.3 \times 10^6 (-0.242) = -72.80\,\text{kip}$$

$$F_3 = 0.43 \times 10^6 \left\{ \frac{-0.585 + (1.0 - 0.242)}{\sqrt{2}} \right\} = 51.47\,\text{kip} \qquad (6\text{-}25g)$$

The forces and displacements calculated via IFM, IFMD, and the stiffness method are in agreement. Both IFMD and the stiffness method have identical governing equations. These are of dimension ($m \times m$) and are symmetrical. The compatibility matrix $[C]$ is not used by either method. This is because the compatibility conditions are automatically satisfied by displacement. For example the CC ($[C]\{\beta\} = [C][B^T]\{X\} = \{0\}$ since $[C][B^T] = [0]$).

IFM calculates forces first and then back-calculates the displacement. If the desire is to calculate forces alone, then there is no need to formulate the dual or stiffness equations in displacements. IFM may be preferred. If, however, it is required to calculate both forces and displacements, then any one of the three methods can be used.

Problems

Use the properties of material given in Tables A5-1 and A5-2 to solve the problems.

6-1 For the six trusses shown in Fig. P6-1, identify the number of:
1. Force, displacement, deformation, and reaction variables.
2. The number of equilibrium equations and compatibility conditions.
3. The degree of internal and external indeterminacies.

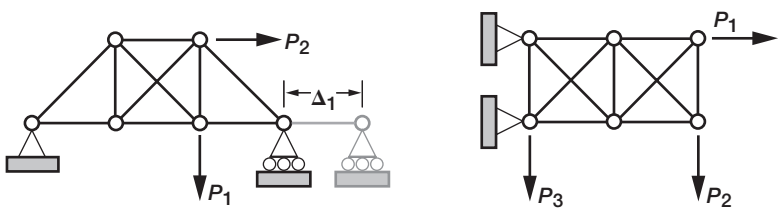

(a) Truss a. (b) Truss b.

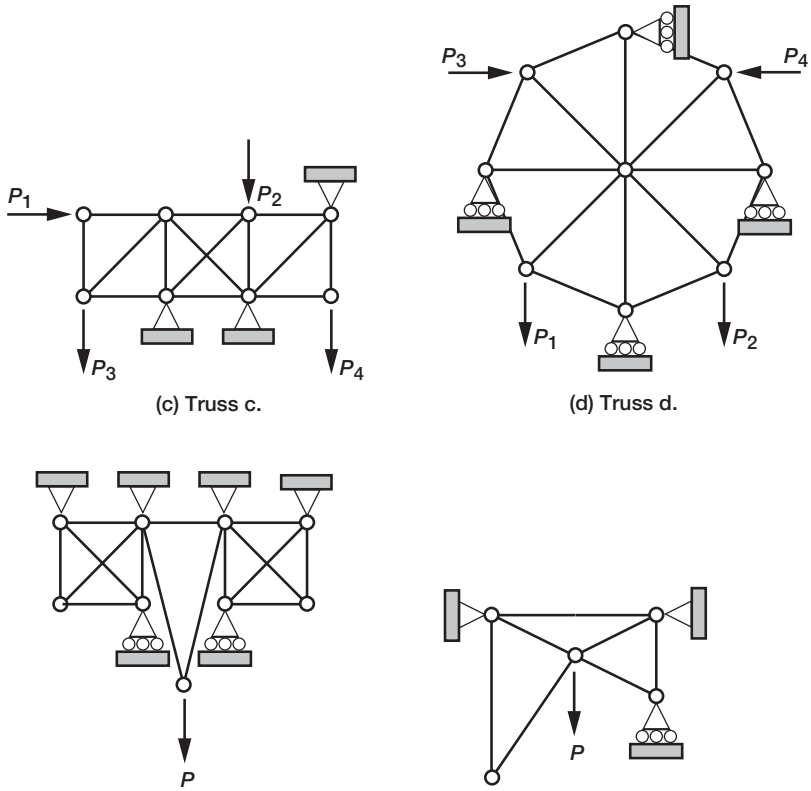

FIGURE P6-1

6-2 Answer either true or false to the following statements.

Statement	*True False*
(1) The deformation $\{\beta\}$ in CC ($[C]\{\beta\} = \{0\}$) represents:	
(a) Total deformation	
(b) Initial deformation	
(c) Elastic deformation	
(d) None of the above	
(2) The deformation $\{\beta\}$ in FDR ($\{\beta\} = [G]\{F\}$) represents:	
(a) Total deformation	
(b) Initial deformation	
(c) Elastic deformation	
(d) None of the above	
(3) The deformation $\{\beta\}$ in DDR ($\{\beta\} = [B]^T\{X\}$ represents:	
(a) Total deformation	
(b) Initial deformation	

(c) Elastic deformation
(d) None of the above

(4) The deformation $\{\beta\}$ in a truss bar can be measured:
(a) In unit of length, like inch, or centimeter
(b) In unit of radian or degree
(c) It is a dimensionless quantity

(5) Stress is induced in a truss bar because of:
(a) Total deformation
(b) Initial deformation
(c) Elastic deformation

(6) CC is homogenous equation in total deformation.

(7) CC is nonhomogenous equation in elastic deformation.

(8) A truss has a (6×8) EE matrix $[B]$. It has:
(a) Eight bars
(b) Eight EE and six CC
(c) Six EE and 2 CC

(9) Degree of indeterminacy is dependent on
(a) Applied load
(b) Settling of support
(c) Temperature variation
(d) Young's modulus

6-3 Analyze the square diamond truss of size three meters, as shown in Fig. P6-3 by all three methods:
Integrated Force Method.
Dual Integrated Force Method.
Stiffness Method.

The outer four bars of the truss are made of steel with one square inch cross-sectional area. The diagonal bars are made of aluminum with nine square centimeters cross-sectional area. The truss is subjected to mechanical load as well as a change of temperature and settling of support as follows:

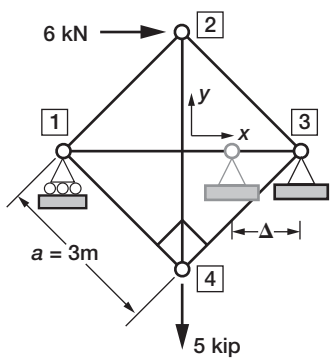

FIGURE P6-3

(a) Loads are applied at nodes 2 and 4: a 6 kN along the x-coordinate direction at node 2 and 5 kip along the negative y-coordinate direction at node 4.
(b) Temperatures of the diagonal bars are increased by 75°C.
(c) The support at node 3 is moved along the negative x-coordinate direction by 0.5 in.

6-4 Model the column shown in Fig. P6-4(a) as three bar members and analyze by IFM and stiffness method. The column is made of steel. It has a total length of 9 meters. Its cross-sectional area is 2 in.^{2} for the central one-third span, while it is 1 in.^{2} for the remainder of its length. It is subjected to three load cases:

Load case 1: Mechanical load ($P_1 = 10$ kip and $P_2 = 20$ kip) applied at the one-third and two-thirds span locations as shown in Fig. P6-4(b).

Load case 2: A uniform temperature variation ($\Delta T = 200°$F) along the central one-third span, as shown in Fig. P6-4(c).

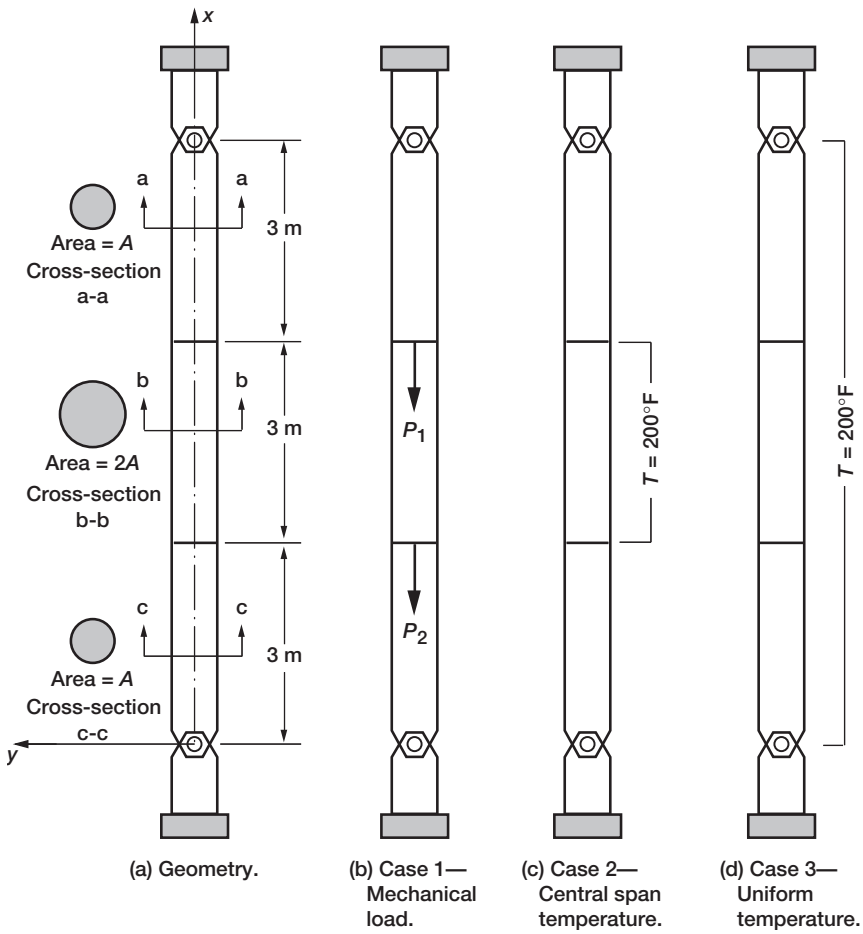

FIGURE P6-4

Load case 3: A uniform temperature variation ($\Delta T = 200°F$) along the entire column length, as shown in Fig. P6-4(d).

6-5 Find bar forces and nodal displacements for the truss shown in Fig. P6-5 by IFM and stiffness method. The truss is made of steel with one square in. bar areas and the length ($\ell = 48$ in.). It is subjected to three load cases:
Case 1: Mechanical load ($P = 10$ kN) at node 4 along the x-coordinate axis.
Case 2: A uniform temperature variation ($\Delta T = 100°F$) for the truss.
Case 3: A settling of support 3 by 1 cm along the y-coordinate direction.

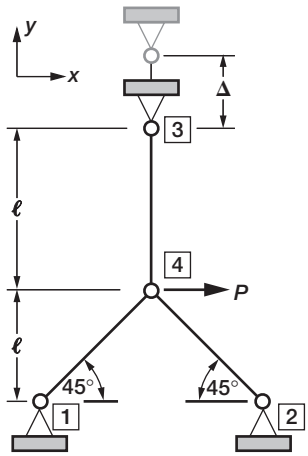

FIGURE P6-5

6-6 A four-feet diameter symmetrical hexagonal wagon wheel with 6 aluminum spokes and a steel rim is modeled as a truss, as shown in Fig. P6-6. The bar area is 1 in.^{2} for the

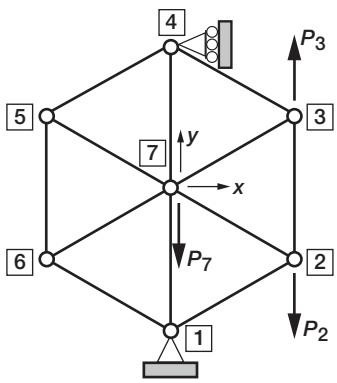

FIGURE P6-6

spokes, while it is 2 in.^{2} for the rim. Analyze the truss by force and displacement method for the following load cases.

Case 1: Gravity load ($P_7 = 5$ kip) applied at node 7 along the negative y-coordinate direction.

Case 2: Bar connecting nodes 2 and 3 is stretched by equal load but with opposite directions ($P_3 = -P_2 = 1$ kip) at nodes 2 and 3.

Case 3: The temperature in the steel rim is increased by ($\Delta T = 200°$F).

Case 4: The temperature is decreased by ($\Delta T = 100°$F) in the spokes.

Note: Formulate the equations. Verify by substituting the given answers.

7 Indeterminate Beam

An indeterminate beam is obtained by adding extra restraints at the supports of a determinate beam, by increasing the number of spans, or both. A beam with additional restraints and a multispan continuous beam can more efficiently transfer external load to the foundation than a determinate beam. Furthermore, it remains stable even when some or all of the extra spans and the redundant restraints are removed. Indeterminate beams are used in bridges, buildings, and machinery. Temperature and support settling induce stress in an indeterminate beam, but not in a determinate beam. To analyze an indeterminate beam, we add compatibility conditions to the determinate beam formulation. The four sets of equations required for its analysis are the

1. Equilibrium equations (EE)
2. Deformation displacement relations (DDR)
3. Force deformation relation (FDR)
4. Compatibility conditions (CC)

The types of response variables remain the same for determinate and indeterminate beams. These are a bending moment (M), shear force (V), reaction (R), displacement (v), rotation (θ), curvature (κ) that also is the beam deformation ($\beta = \kappa$), stress (σ), and strain (ε). Their individual numbers can be greater for indeterminate beams. The amount of increase in the number of force variables over determinate beam becomes the degree of indeterminacy. It is defined in terms of four parameters.

m_d total number of nodes, which includes the support nodes
n_F number of internal forces (each span has two forces—a moment and a shear force)
n_R number of support restraints, which is also equal to the number of reactions
m $= (2m_d - n_R) =$ number of displacement components

Each node has two displacements—a transverse displacement (or deflection) and a rotation.

The degree of indeterminacy (r) of a beam is equal to the sum of the beam forces and the reactions ($n_F + n_R$), less twice the number of nodes ($2m_d$) because a node has two EE.

$$r = n_F + n_R - 2m_d \tag{7-1a}$$

Equation (7-1a) is rearranged using the formula $m = 2m_d - n_R$ to obtain a simpler form.

$$r = n_F - m \tag{7-1b}$$

The degree of indeterminacy (r) is equal to the difference between the number of internal forces (n_F) and the number of displacement components (m). If $r = 0$, then the beam is determinate. If $r > 0$, then it is an indeterminate beam. If $r < 0$, then it is a mechanism, and this book does not address the analysis of mechanism.

To illustrate the degree of indeterminacy, we consider the beams shown in Figs. 7-1a to 7-1c. The propped beam shown in Fig. 7-1a has two nodes ($m_d = 2$), two internal forces

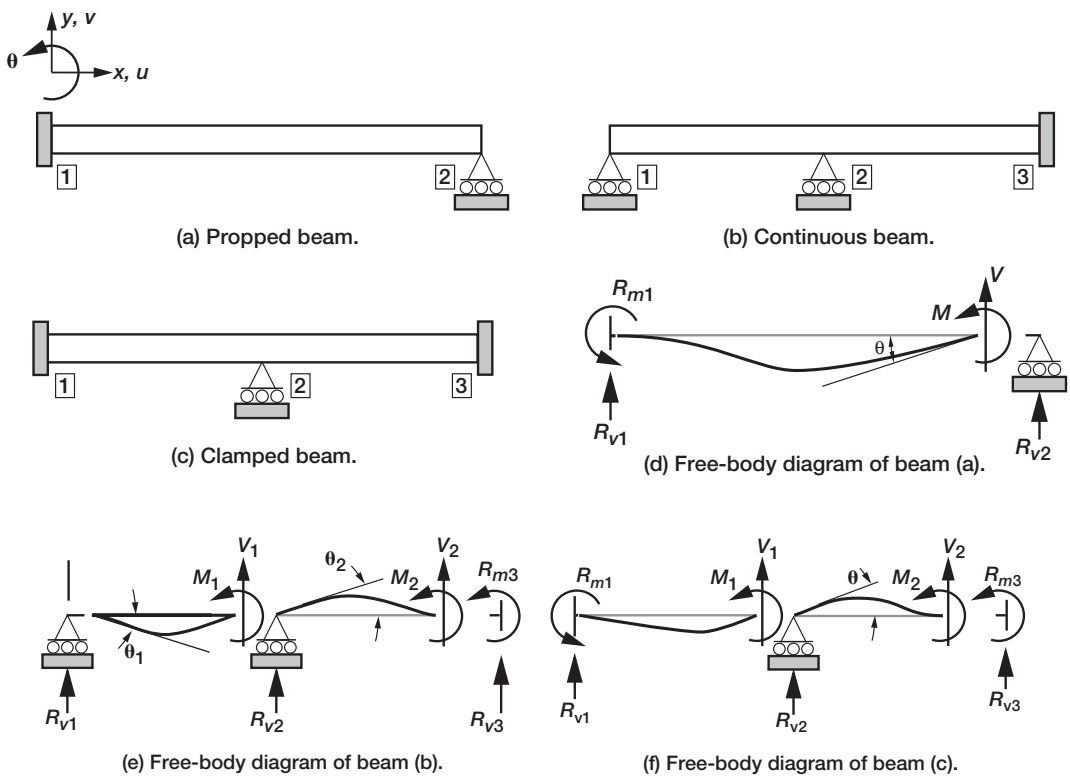

FIGURE 7-1 *Indeterminate beams.*

($n_F = 2$), three support restraints ($n_R = 3$), and a single displacement component ($m = 1$), as marked in Fig. 7-1*d*. Bending moment M and shear force V are the internal forces. It has two reactions (R_{m1} and R_{v1}) at support node 1 and one reaction (R_{v2}) at node 2. Its single displacement is the rotation (θ) at node 2.

The degree of indeterminacy (r) is

$$r = 2 + 3 - 2 \times 2 = 1 \quad \text{[see Eq. (7-1}a\text{)]}$$
$$r = 2 - 1 = 1 \quad \text{[see Eq. (7-1}b\text{)]}$$

The degree of indeterminacy (r), calculated from either formula, is one.

The parameters for the continuous beam shown in Fig. 7-1*b* are the number of nodes ($m_d = 3$), forces ($n_F = 4$), restraints ($n_R = 4$), and displacements ($m = 2$), as marked in Fig. 7-1*e*. The internal forces are V_1, M_1, V_2, and M_2; the reactions are R_{v1}, R_{v2}, R_{v3}, and R_{m3}; and the displacements are θ_1 and θ_2.

The degree of indeterminacy (r) is

$$r = 4 + 4 - 2 \times 3 = 2 \quad \text{[see Eq. (7-1}a\text{)]}$$
$$r = 4 - 2 = 2 \quad \text{[see Eq. (7-1}b\text{)]}$$

For the two-span clamped beam shown in Fig. 7-1*c*, $m_d = 3$, $n_F = 4$, $n_R = 5$, and $m = 1$, as marked in Fig. 7-1*f*. The internal forces are V_1, M_1, V_2, and M_2; the reactions are R_{v1}, R_{m1}, R_{v2}, R_{v3}, and R_{m3}; and the displacement is θ.

The degree of indeterminacy (r) is

$$r = 4 + 5 - 2 \times 3 = 3 \quad \text{[see Eq. (7-1}a\text{)]}$$
$$r = 4 - 1 = 3 \quad \text{[see Eq. (7-1}b\text{)]}$$

The degree of indeterminacy is a property of the structural configuration, and it depends on the number of spans and support restraints. It is independent of member dimensions, material properties, and loads.

EXAMPLE 7-1

Calculate the degree of indeterminacy of the beams shown in Figs. 7-2*a* to 7-2*c*.

The clamped beam shown in Fig. 7-2*a* has two nodes ($m_d = 2$); two forces: V and M ($n_F = 2$); four restraints ($n_R = 4$) and reactions: R_{v1}, R_{m1}, R_{v2}, and R_{m2}; but it has no explicit displacement at either beam nodes ($m = 0$), as marked in Fig. 7-2*d*. Its degree of indeterminacy (r) is

$$r = 2 + 4 - 2 \times 2 = 2 \quad \text{[see Eq. (7-1}a\text{)]}$$
$$r = 2 - 0 = 2 \quad \text{[see Eq. (7-1}b\text{)]}$$

The beam with an overhang shown in Fig. 7-2*b* has three nodes ($m_d = 3$); four forces ($n_F = 4$): V_1, M_1, V_2, and M_2; two restraints ($n_R = 2$) and reactions: R_{v1}, R_{v2}; and four displacements ($m = 4$): θ_1, θ_2, v_3, and θ_3, as marked in Fig. 7-2*e*. Its degree of indeterminacy (r)

$$r = 4 + 2 - 2 \times 3 = 0 \quad [\text{see Eq. } (7\text{-}1a)]$$
$$r = 4 - 4 = 0 \quad [\text{see Eq. } (7\text{-}1b)]$$

The overhang beam is a determinate structure.

The three-span beam in Fig. 7-2*c* has four nodes ($m_d = 4$); six forces ($n_F = 6$): V_1, M_1, V_2, M_2, V_3, and M_3; five restraints ($n_R = 5$), and reactions: R_{v1}, R_{v2}, R_{v3}, and R_{m1}; and three ($m = 3$) displacements: θ_2, θ_3, and θ_4, as marked in Fig. 7-2*f*. Its degree of indeterminacy (r) is

$$r = 6 + 5 - 2 \times 4 = 3 \quad [\text{see Eq. } (7\text{-}1a)]$$
$$r = 6 - 3 = 3 \quad [\text{see Eq. } (7\text{-}1b)]$$

The continuous beam is three degrees indeterminate.

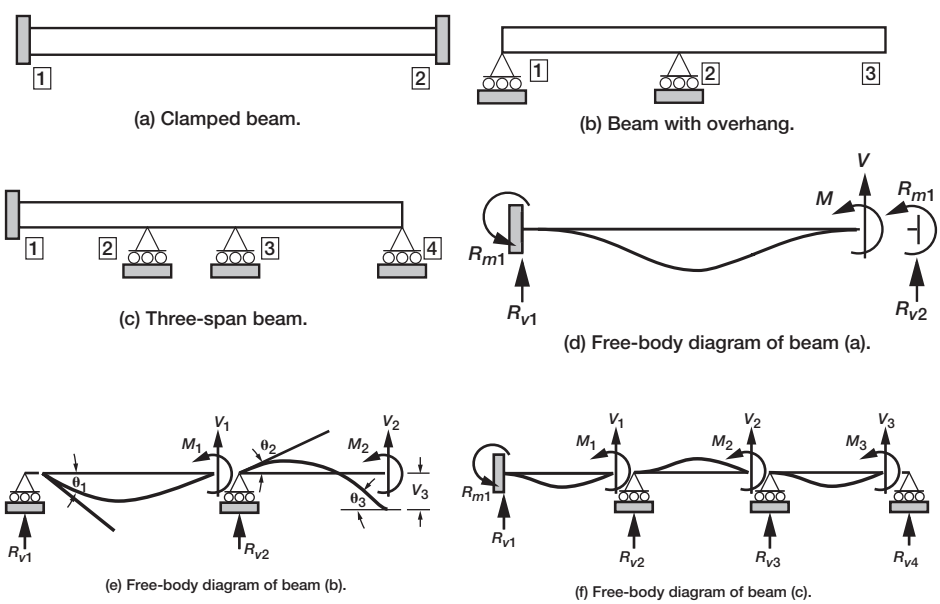

FIGURE 7-2 *Indeterminate beams of Example 7-1.*

7.1 Internal Forces in a Beam

A beam member has two nodes, a span ℓ and two internal forces. There are two traditional systems to select the internal forces. The first system uses a shear force (V) and a bending moment (M) at node 2, as shown in Fig. 7-3a. The second one uses two bending moments (M_1 and M_2) at nodes 1 and 2, as shown in Fig. 7-3b. The two systems are equivalent and follow the t-sign convention. Either system can be selected to solve a problem. Some engineers prefer the system with two moments because both variables have the same dimension. The choice of a force system neither increases nor decreases the analysis complexity.

We can back-calculate the forces at the nodes in terms of the internal forces by using the transverse (or shear) equilibrium equations and rotational (or moment) EE. The equilibrium equations follow the n-sign convention. For convenience the n-sign convention is also used for the four nodal forces (V_{v1}, $M_{\theta 1}$, V_{v2}, $M_{\theta 2}$) as shown in Fig. 7-3c.

The nodal forces can be expressed in terms of an internal force system 1, consisting of (M) and (V) as:

$$\begin{Bmatrix} V_{v1} \\ M_{\theta 1} \\ V_{v2} \\ M_{\theta 2} \end{Bmatrix} = \begin{Bmatrix} -V \\ -\ell V - M \\ V \\ M \end{Bmatrix} = \begin{bmatrix} -1 & 0 \\ -\ell & -1 \\ 1 & 0 \\ 0 & 1 \end{bmatrix} \begin{Bmatrix} V \\ M \end{Bmatrix} \tag{7-2a}$$

The four nodal forces (V_{v1}, $M_{\theta 1}$, V_{v2}, $M_{\theta 2}$) are in equilibrium with the independent internal shear force and bending moment (V, M). Likewise, the nodal forces are obtained when M_1 and M_2 are considered as the internal forces.

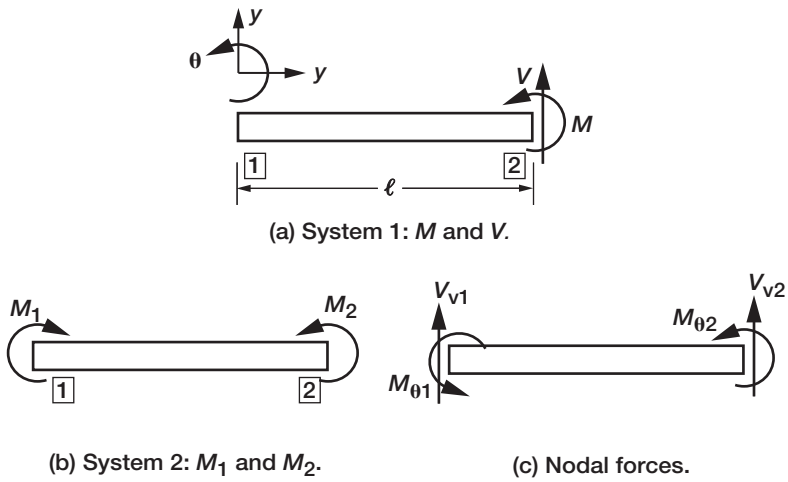

FIGURE 7-3 *Two internal force systems for a beam.*

$$\begin{Bmatrix} V_{v1} \\ M_{\theta 1} \\ V_{v2} \\ M_{\theta 2} \end{Bmatrix} = \begin{Bmatrix} \dfrac{M_2 - M_1}{\ell} \\ M_1 \\ \dfrac{M_1 - M_2}{\ell} \\ M_2 \end{Bmatrix} = \begin{bmatrix} -\dfrac{1}{\ell} & \dfrac{1}{\ell} \\ -1 & 0 \\ \dfrac{1}{\ell} & -\dfrac{1}{\ell} \\ 0 & 1 \end{bmatrix} \begin{Bmatrix} M_1 \\ M_2 \end{Bmatrix} \tag{7-2b}$$

The four nodal forces (V_{v1}, $M_{\theta 1}$, V_{v2}, $M_{\theta 2}$) are in equilibrium with the independent internal bending moments (M_1 and M_2). The internal forces follow the t-sign convention, while the nodal forces follow n-sign convention.

EXAMPLE 7-2

Two moments ($M_1 = -6$ kN-m and $M_2 = 13$ kN-m) are considered as the internal forces of the beam of span $\ell = 8$ m, as shown in Fig. 7-4a. Calculate the alternate internal force systems and the nodal forces.

The nodal forces for the two-moment internal force system are calculated first. For the moments $M_1 = -6$ kN-m and $M_2 = 13$ kN-m, the shear force ($V = V_{v1}$) at node 1 is obtained from the rotational EE written at node 2.

$$V = V_{v1} = (M_2 - M_1)/8 = 2.375 \text{ kN}$$

The transverse EE yields the shear force at node 2 as ($V = V_{v2} = -2.375$ kN).

The nodal forces are: (V_{v1}, $M_{\theta 1}$, V_{v2}, $M_{\theta 2}$) = (2.375 kN, 6 kN-m, −2.375 kN, 13 kN-m).

The nodal forces for the shear force and moment internal force system are obtained by inspection.

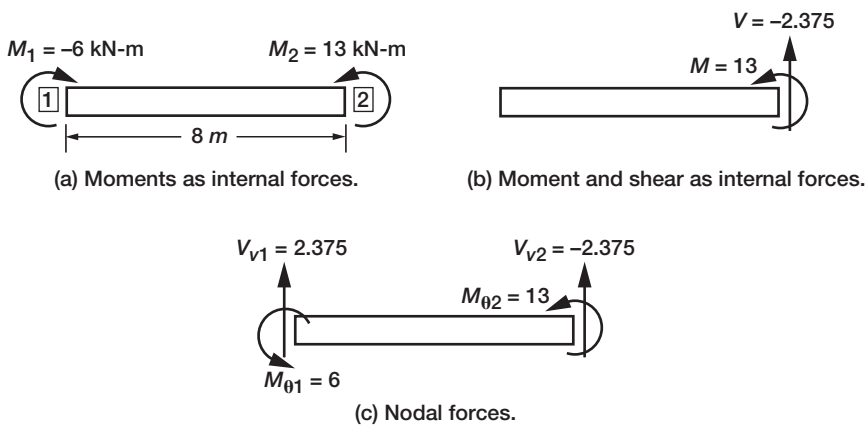

FIGURE 7-4 *Internal force for the beam in Example 7-2.*

The internal forces are ($V = V_{v2} = -2.375\,\text{kN}$ and $M = M_{\theta 2} = 13\,\text{kN-m}$). The nodal forces remain unchanged even for this internal system. The internal forces are marked in Fig.7-4*b*. Nodal forces are marked in Fig.7-4*c*.

The nodal forces satisfy the equilibrium equations.

$$\text{Transverse EE: } V_{v2} + V_{v1} = -2.375 + 2.375 = 0$$
$$\text{Rotational EE: } M_{\theta 2} + M_{\theta 1} + \ell V_{v2} = 13 + 6 - 2.375 \times 8 = 0$$

The shear forces (V_{v1}, V_{v2}) are equal in magnitude but opposite in direction. The moments ($M_{\theta 1}$, $M_{\theta 2}$) need not be equal either in magnitude or in direction.

7.2 IFM Analysis for Indeterminate Beam

The IFM to analyze indeterminate beam follows the steps of indeterminate truss analysis discussed in Chapter 6. The following steps are modified for flexure to obtain the beam analysis.

Step 0—Solution Strategy.
Step 1—Formulate the Equilibrium Equations.
Step 2—Derive the Deformation Displacement Relations.
Step 3—Generate the Compatibility Conditions.
Step 4—Formulate the Force Deformation Relations.
Step 5—Express the Compatibility Conditions in Terms of Forces.
Step 6—Couple the Equilibrium Equations and Compatibility Conditions to Obtain the IFM Equations, and Solve for the Forces.
Step 7—Back-Calculate the Displacements and Other Response Variables, as Required.

The analysis steps are developed considering a clamped beam, Example 7-3, shown in Fig. 7-5*a*.

EXAMPLE 7-3: Clamped Beam with a Mechanical Load, a Thermal Load, and Settling of Support

A clamped beam has a uniform depth d, thickness b, and moment of inertia I. It is made of steel with a Young's modulus of E and a coefficient of expansion of α per °F. It is clamped at both ends (A and B) as shown in Fig. 7-5*a*. Analyze the beam for the following load cases:

Load Case 1: Transverse load P at the center of the span.
Load Case 2: Uniform temperature along the length of the beam. Along the depth, the temperature variation is linear with values ΔT and $-\Delta T$ at the upper and lower surfaces, respectively, as shown in Fig. 7-5*b*.

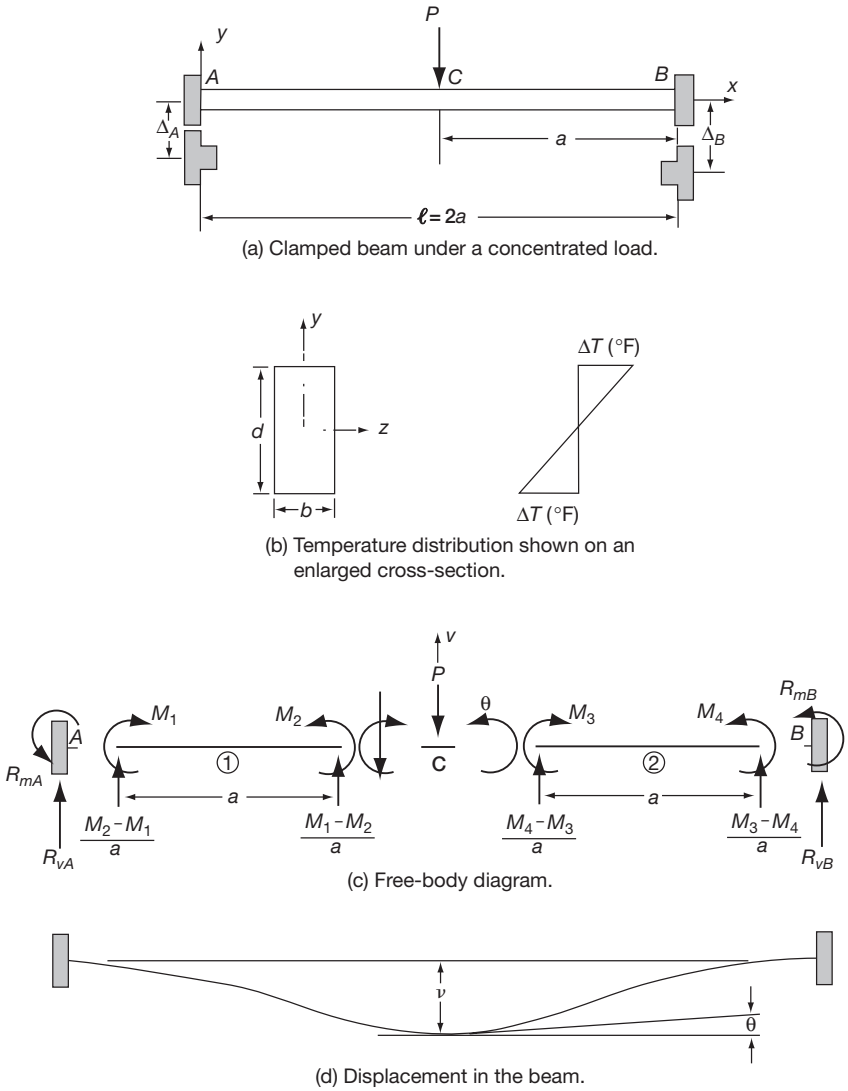

FIGURE 7-5 *Clamped beam under a concentrated load and a settling support.*

Load Case 3: Settling of supports A and B by Δ_A and Δ_B inches along the negative y-coordinate direction, respectively.

Load Case 1—Solution for a Mechanical Load

Step 0—Solution Strategy

The coordinate system (x, y) with its origin at A is shown in Fig. 7-5a. The beam is divided into two members (1, 2) and three nodes (A, C, B). For the beam member, two

moments (M_1, M_2), as depicted in Fig. 7-3c, are considered as the internal force unknowns. Moments M_1, M_2, M_3, and M_4 are the force unknowns of the problem, and $n = 4$. The beam has two restraints at A and at B. At $A(x = 0)$ and at $B(x = \ell)$,

1. Transverse displacement $v(x) = 0$
2. Slope $\theta = dv/dx = 0$

The beam has four reactions (R_{vA}, R_{mA}, R_{vB}, R_{mB}). The problem has two free displacements at the location C, consisting of the transverse displacement v and the rotation θ, or ($m = 2$). The problem is two-degrees indeterminate ($r = n - m = 4 - 2 = 2$). The displacements (v and θ) are shown in Fig. 7-5d. Notice that the slope is zero from symmetry. We will not enforce this condition, but its calculated value should turn out to be zero ($\theta = 0$).

Step 1—Formulate the Equilibrium Equations

Two EE can be written at each node of a beam. The first EE is written along the transverse, or y-coordinate, direction. The second equation is the moment, or the rotational, EE. We avoid using an equilibrium equation at a boundary node in the direction of restraint because this process increases the number of unknowns by one, while adding one equation yields no explicit net benefit. It is simpler to back-calculate the reactions from the internal forces. In other words, the internal forces are considered as the unknowns, and the EE are written along the displacement degrees of freedom of the beam.

Two equilibrium equations can be written at node C, along the transverse displacement v and rotation θ. The transverse EE at C (see Fig. 7-5c) is

$$-\left(\frac{M_1 - M_2}{a} + \frac{M_4 - M_3}{a} + P\right) = 0 \tag{7-3a}$$

The rotational EE at C along the θ displacement direction is

$$-(-M_2 + M_3) = 0 \tag{7-3b}$$

The two EE in matrix notation can be written as

$$\begin{bmatrix} 1/a & -1/a & -1/a & 1/a \\ 0 & 1 & -1 & 0 \end{bmatrix} \begin{Bmatrix} M_1 \\ M_2 \\ M_3 \\ M_4 \end{Bmatrix} = \begin{Bmatrix} -P \\ 0 \end{Bmatrix} \tag{7-3c}$$

Two EE contain four unknown moments (M_1, M_2, M_3, M_4), or the problem is two-degrees indeterminate. Two CC are required for its solution.

Step 2—Derive the Deformation Displacement Relations

The procedure developed for truss analysis is modified to obtain the compatibility conditions for the beam. The first step is to formulate the deformation displacement relations. The DDR expression remains the same, $\{\beta\} = [B]^T\{X\}$. For a beam with moments M_1 and M_2 as the nodal forces, the deformations (β_1 and β_2) are the corresponding rotations.

The DDR ($\{\beta\} = [B]^T\{X\}$) for the beam are obtained as

$$\beta_1 = \frac{v}{a}$$

$$\beta_2 = -\frac{v}{a} + \theta$$

$$\beta_3 = -\frac{v}{a} - \theta$$

$$\beta_4 = \frac{v}{a} \tag{7-4}$$

The deformations (β_1, β_2, β_3, β_4) correspond to the moments (M_1, M_2, M_3, M_4), respectively. Displacements v and θ are the dual variables of the transverse and rotational EE, respectively. The rotation corresponding to the moment M_1 is ($\beta_1 = v/a$). The angle of rotation is taken to be slope (tangent $\theta = \theta$) because displacement is small. It is approximated as the ratio of displacement (v) to half span (a). The deformation corresponding to the moment M_2 has two components: $\beta_2 = -v/a + \theta$. The first part ($-v/a$), is the contribution from the displacement (v). The second part is the rotation at node C ($\theta_2 = \theta$). Likewise, the deformation corresponding to the moment M_3 has two components: ($\beta_3 = -v/a - \theta$). For the moment M_4, it is ($\beta_4 = v/a$).

Step 3—Generate the Compatibility Conditions

The two CC for the problem are obtained by eliminating the two displacements from the four DDR as

$$\beta_1 - \beta_4 = 0$$

$$\beta_1 + \beta_2 + \beta_3 + \beta_4 = 0 \tag{7-5}$$

In matrix notation, the CC can be written as

$$\begin{bmatrix} 1 & 0 & 0 & -1 \\ 1 & 1 & 1 & 1 \end{bmatrix} \begin{Bmatrix} \beta_1 \\ \beta_2 \\ \beta_3 \\ \beta_4 \end{Bmatrix} = \begin{Bmatrix} 0 \\ 0 \end{Bmatrix} \tag{7-6a}$$

The null property ($[B][C]^T = [0]$) of the EE and CC matrices can be verified as

$$\begin{bmatrix} 1/a & -1/a & -1/a & 1/a \\ 0 & 1 & -1 & 0 \end{bmatrix} \begin{bmatrix} 1 & 1 \\ 0 & 1 \\ 0 & 1 \\ -1 & 1 \end{bmatrix} = \begin{bmatrix} 0 & 0 \\ 0 & 0 \end{bmatrix} \tag{7-6b}$$

Force Deformation Relation

The equilibrium equations are expressed in terms of force variables $\{F\}$ as $([B]\{F\} = \{P\})$. Likewise, the compatibility conditions are written in terms of deformations $\{\beta\}$ as $([C]\{\beta\} = \{0\})$. Since indeterminate analysis requires the coupling of the EE and CC, it is necessary to establish relations between the forces and deformations. The force deformation relation (FDR) can be used to express the CC in terms of forces, which can then be coupled to the EE, which are already available in terms of forces. The FDR of strength of materials is equivalent to the familiar Hooke's law of elasticity, which relates stress σ to strain ϵ through the Young's modulus E of the material ($\sigma = E\varepsilon$). The FDR can be obtained from Hooke's law by relating stress to force and deformation to strain. For a normal, or axial, force F acting in a bar with a cross-sectional area A, length ℓ, and axial deformation (β^a) as shown in Fig. 7-6, the FDR can be obtained as follows:

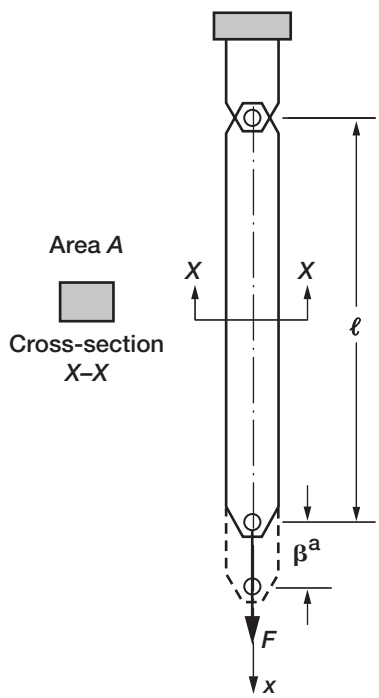

FIGURE 7-6 *Elongation, β^a, due to the axial force* F *in the bar.*

$$\sigma = \frac{F}{A} \quad \text{and} \quad \varepsilon = \frac{\beta^a}{\ell} \tag{7-7}$$

Hooke's law can be written in terms of force F and deformation β^a as follows:

$$\varepsilon = \frac{\beta^a}{\ell} = \frac{\sigma}{E} = \frac{F}{AE}$$

or

$$\beta^a = \left(\frac{\ell}{AE}\right)F = gF \tag{7-8a}$$

where, the flexibility coefficient is defined as

$$g = \frac{\ell}{AE} \tag{7-8b}$$

The flexibility coefficient ($g = \ell/AE$) represents the deformation in the bar for a unit value of the force ($F = 1$). It is a property of the bar and a function of length, area, and Young's modulus.

Force Deformation Relation from Energy Considerations

The FDR given by Eq. (7-8a) can be alternatively derived from an energy principle. The first derivative of strain energy U stored in a bar with respect to bar force F is equal to the axial deformation β^a corresponding to that force F,

$$\frac{\partial U}{\partial F} = \beta^a \tag{7-9}$$

Use of Eq. (7-9) requires the definition of the strain energy, also referred to as the internal energy (U), which is a scalar. For the case of axial force (F) acting in a uniform bar of cross-sectional area A (as shown in Fig. 7-6), the strain energy can be defined as

$$U = \int_0^\ell \frac{\sigma\varepsilon}{2} A dx \tag{7-10}$$

The strain energy can be expressed in terms of force F by eliminated stress ($\sigma = F/A$) and strain ($\varepsilon = F/AE$) in favor of force (F) to obtain

$$U = \int_0^\ell \frac{F^2}{2AE} dx = \frac{F^2\ell}{2AE}$$

or

$$\beta^a = \frac{\partial U}{\partial F} = \left(\frac{\ell}{AE}\right)F \tag{7-11}$$

Notice that Eq. (7-8*a*), which is derived from Hooke's law, and Eq. (7-11), which is obtained from energy considerations, are identical. Experimentation is the basis of Hooke's law. The alternative, energy-based derivation, however, is analytical in nature even though the definition of strain energy requires material constants such as the Young's modulus E. In the analytical indeterminate analysis, we prefer the energy-based derivation for the FDR. The energy concept can be easily extended to derive all four types of analysis equations: EE, CC, DDR, and FDR.

Strain Energy Expression for Force Deformation Relations

Strain energy is a powerful scalar quantity that can be used to derive different types of analysis equations and formulations of structural mechanics. In this elementary treatment, a definition of the energy scalar that is sufficient to derive the force deformation relations for beams will be presented. For the discussion here, the strain energy scalar can be defined as follows:

$$U = \int_v \left(\frac{\sigma^2}{2E} + \sigma\alpha\Delta T \right) dv \tag{7-12}$$

where

E	Young's modulus
ΔT	change in temperature
v	volume of the beam
α	coefficient of thermal expansion
σ	stress in the beam

Equation (7-12) is specialized next to obtain the explicit strain energy expression for axial force, bending moment, and shear force.

Case 1—Axial Force in a Bar

For the bar shown in Fig. 7-6, the strain energy scalar given by Eq. (7-12) can be specialized with the following definitions:

$$\text{Elemental volume} \quad dv = A dx$$

$$\sigma = \frac{F}{A} \tag{7-13a}$$

$$U^a = \int_0^\ell \left\{ \frac{1}{2E} \left(\frac{F}{A} \right)^2 + \frac{F}{A} \alpha\Delta T \right\} A dx$$

where U^a is the strain energy stored in the bar subjected to an axial force F and a ΔT change in temperature across the bar length.

For a uniform bar of length ℓ and cross-sectional area A, the strain energy U^a is simplified to

$$U^a = \frac{F^2\ell}{2AE} + F\alpha\Delta T\ell \tag{7-13b}$$

The axial elongation in the bar β^a is obtained as the first derivative of the scalar U^a with respect to the axial force F as

$$\beta^a = \frac{dU^a}{dF} = \left(\frac{\ell}{AE}\right)F + \alpha\Delta T\ell \tag{7-13c}$$

In the absence of temperature ($\Delta T = 0$), the force deformation relation given by Eq. (7-13c) simplifies to Eq. (7-11). The contribution to deformation from temperature (ΔT) is equal to the product of strain ($\alpha\Delta T$) and length ℓ, which is the second term.

Case 2—Bending of a Beam

A beam, subjected to external loads is shown in Fig. 7-7. The flexure of the beam involves the interaction of a bending moment $\mathcal{M}$ and a shear force V. However, in the energy expression it is customary to include only the strain energy due to bending moment. Because the strain energy due to shear force is small, it is neglected for simple structural mechanics applications without an appreciable adverse effect. By considering the beam shown in Fig. 7-7a as an example, we can obtain the strain energy in flexure from Eq. (7-12) with the following specialization.

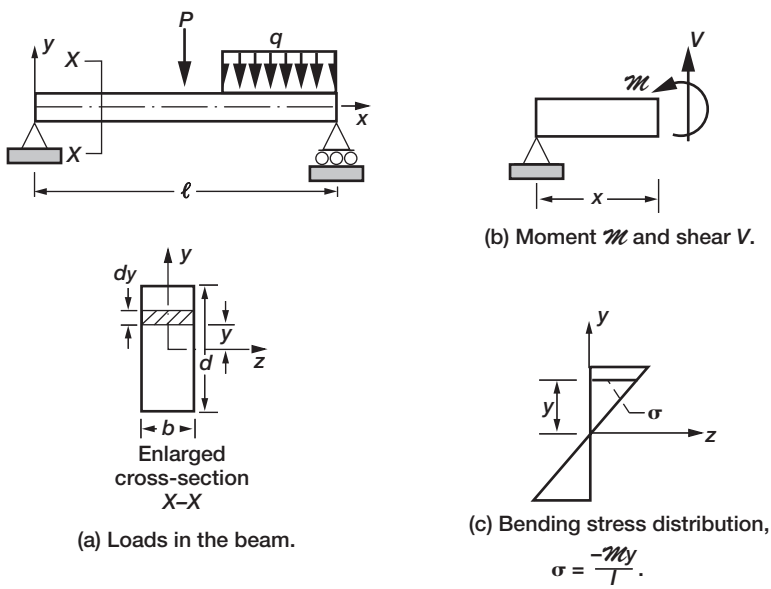

(a) Loads in the beam.

(b) Moment $\mathcal{M}$ and shear V.

(c) Bending stress distribution,

FIGURE 7-7 *Simply supported beam.*

Stress is related to moment through the standard flexure formula. Stress σ at a location x along the beam length and at a distance y from the neutral axis, as shown in Fig. 7-7c, can be written as

$$\frac{-\sigma}{y} = \frac{\mathcal{M}}{I} \tag{7-14a}$$

where I is the moment of inertia of the beam cross-section and $\mathcal{M}$ is the bending moment. The script $\mathcal{M}$ is used for the moment function at x as $\mathcal{M}$ or $\mathcal{M}(x)$. The incremental volume dv for the beam with a uniform width b, shown in Fig. 7-5b can be written as

$$dv = bdydx \tag{7-14b}$$

where dy and dx are incremental distances along the depth and length of the beam, respectively.

When we substitute the stress from Eq. (7-14a) and the incremental volume from Eq. (7-14b) into the energy expression given by Eq. (7-12), the following equation is obtained for the strain energy U^b in flexure:

$$U^b = \int_0^{\ell} \frac{1}{2}\left[\left(\frac{\mathcal{M}^2}{EI}\right)\left\{\int_{-d/2}^{d/2} \frac{by^2dy}{I}\right\} - \int_0^{\ell} \frac{\mathcal{M}}{EI}\left\{\int_{-d/2}^{d/2} E\alpha\Delta Tbydy\right\}\right]dx \tag{7-15}$$

where, d, b, and ℓ represent the depth, width, and length of the beam, respectively. Bending moment in a beam shown in Fig. 7-8a, which produces compression in the top surface and tension in the bottom surface, gives rise to a concave deformed shape. However, positive temperature at the top surface (and negative temperature at the bottom surface) produces convex deformation in the beam. The two opposite types of deformations is accounted through the negative sign in the second term in the strain energy expression given by Eq. (7-15).

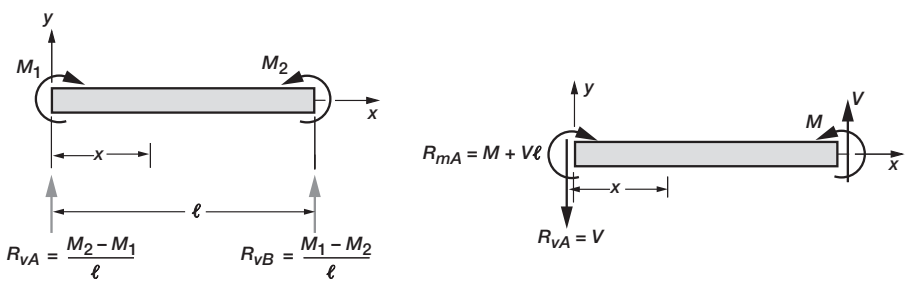

(a) Moments M_1 and M_2 are the force variables. R_A and R_B are the equilibrating reactions that represent shear forces.

(b) Moment M and shear V are the force variables. M_A and R_A are the equilibrating reactions.

FIGURE 7-8 *Deformation in a beam.*

The moment of inertia is defined as

$$I = \int_{-d/2}^{d/2} by^2 dy \tag{7-16a}$$

Moment (M_T) due to thermal effect can be defined as

$$M_T = \int_{-d/2}^{d/2} E(\alpha \Delta T) by dy \tag{7-16b}$$

The strain energy due to bending can be simplified by substituting Eqs. (7-16*a*) and (7-16*b*) into Eq. (7-15) as follows:

$$U^b = \int_0^\ell \left\{ \frac{1}{2} \left(\frac{\mathcal{M}^2}{EI} \right) - \left(\frac{\mathcal{M} M_T}{EI} \right) \right\} dx \tag{7-17}$$

Deformation β^b due to a bending moment M is obtained as the first derivative of the flexural strain energy given by Eq. (7-17), with respect to that bending moment M, as

$$\beta^b = \frac{\partial U^b}{\partial M} = \int_0^\ell \left\{ \frac{\mathcal{M}}{EI} \frac{\partial \mathcal{M}}{\partial M} - \frac{M_T}{EI} \frac{\partial \mathcal{M}}{\partial M} \right\} dx \tag{7-18a}$$

Likewise, the deformation β^{b-s} due to the shear force V (which produces bending, thereby contributing to the strain energy) is obtained as the partial derivative of the flexural strain energy with respect to the shear force V as

$$\beta^{b-s} = \frac{\partial U^b}{\partial V} = \int_0^\ell \left\{ \frac{\mathcal{M}}{EI} \frac{\partial \mathcal{M}}{\partial V} - \frac{M_T}{EI} \frac{\partial \mathcal{M}}{\partial V} \right\} dx \tag{7-18b}$$

As mentioned earlier, beam response requires two internal unknown forces that can be either (1) two bending moments (M_1, M_2), as shown in Fig. 7-8*a*, or (2) a bending moment (M) and a shear force (V), as shown in Fig. 7-8*b*. We will derive the deformations for both cases. Mechanical load is considered first, and then the contribution from temperature load is included.

Case 1—Two Bending Moments (M_1, M_2)

For the beam shown in Fig. 7-8*a*, M_1 and M_2 are considered as the two unknown moments at the boundary locations (A and B) of a beam of length ℓ, respectively. The reactions can be calculated from the equilibrium conditions as

$$R_{vA} = -R_{vB} = \frac{M_2 - M_1}{\ell} \tag{7-19}$$

The moment at any point x in the beam axis can be written as

$$\mathcal{M}(x) = M_1 + \frac{M_2 - M_1}{\ell}x = M_1\left(1 - \frac{x}{\ell}\right) + M_2\frac{x}{\ell} \tag{7-20a}$$

The derivative of the moment $\mathcal{M}$ with respect to M_1 is

$$\frac{\partial \mathcal{M}(x)}{\partial M_1} = (1 - \frac{x}{\ell}) \tag{7-20b}$$

From Eq. (7-18a), we can write the deformation due to the moment M_1 at location A as

$$\beta_A^M = \frac{\partial U^b}{\partial M_1} = \frac{1}{EI}\int_0^\ell \left\{M_1\left(1 - \frac{x}{\ell}\right) + M_2\frac{x}{\ell}\right\}\left(1 - \frac{x}{\ell}\right)dx \tag{7-20c}$$

or

$$\beta_A^M = \left(\frac{\ell}{EI}\right)\left(\frac{M_1}{3} + \frac{M_2}{6}\right)$$

The deformation β_A^M represents the rotation at location A due to the action of both bending moments (M_1 and M_2). Likewise, the deformation at location B can be calculated as

$$\beta_B^M = \frac{\partial U^b}{\partial M_2} = \frac{\ell}{EI}\left(\frac{M_1}{6} + \frac{M_2}{3}\right) \tag{7-20d}$$

The two flexural deformations (β_A^M, β_B^M) can be written in matrix notation as

$$\begin{Bmatrix} \beta_A^M \\ \beta_B^M \end{Bmatrix} = \frac{\ell}{6EI}\begin{bmatrix} 2 & 1 \\ 1 & 2 \end{bmatrix}\begin{Bmatrix} M_1 \\ M_2 \end{Bmatrix} \tag{7-20e}$$

or

$$\{\beta\}^M = [G]^M\{M\} \tag{7-20f}$$

$$[G]^M = \frac{\ell}{6EI}\begin{bmatrix} 2 & 1 \\ 1 & 2 \end{bmatrix} \tag{7-20g}$$

where, the (2×2) coefficient matrix $[G]^M$ is referred to as the flexibility matrix for the beam when M_1 and M_2 are considered to be the moment unknowns. In the FDR given by Eq. (7-20g), the deformations (β_A^M and β_B^M) follow the sign convention for the associated moments (M_1, M_2), which have opposite directions.

Case 2—Bending Moment *M* and Shear Force *V*

For the beam shown in Fig. 7-8b, M and V are considered to be the unknown moment and shear force at location B of the beam of length ℓ. The reactions (R_{vA}, R_{mA}) at location A shown in Fig. 7-8b can be calculated from the equilibrium conditions as

$$R_{vA} = V \quad \text{and} \quad R_{mA} = M + V\ell \tag{7-21a}$$

The moment at any point x and its derivative with respect to the shear force V can be written as

$$\mathcal{M}(x) = M + V(\ell - x)$$

$$\frac{\partial \mathcal{M}(x)}{\partial V} = (\ell - x) \tag{7-21b}$$

The deformation due to the shear force V at location B can be obtained from Eq. (7-18b) as

$$\beta_B^V = \frac{\partial U^b}{\partial V} = \frac{1}{EI}\int_0^\ell \{M + V(\ell - x)\}(\ell - x)dx$$

or

$$\beta_B^V = \left(\frac{1}{EI}\right)\left\{\frac{M\ell^2}{2} + \frac{V\ell^3}{3}\right\} \tag{7-21c}$$

The deformation β_B^V due to the shear force V represents the displacement at B along the shear force V. Likewise, the deformation due to the bending moment at location B can be calculated as

$$\beta_B^M = \frac{\partial U^b}{\partial M} = \frac{1}{EI}\int_0^\ell \{M + V(\ell - x)\}(1)dx$$

or

$$\beta_B^M = \frac{1}{EI}\left(\frac{V\ell^2}{2} + M\ell\right) \tag{7-21d}$$

The deformation β_B^M represents the rotation at B.

In matrix notation, the two deformations can be written as

$$\begin{Bmatrix} \beta_B^V \\ \beta_B^M \end{Bmatrix} = \left(\frac{1}{EI}\right)\begin{bmatrix} \dfrac{\ell^3}{3} & \dfrac{\ell^2}{2} \\ \dfrac{\ell^2}{2} & \ell \end{bmatrix}\begin{bmatrix} V \\ M \end{bmatrix}$$

or

$$\{\beta\}^{VM} = [G]^{VM}\{F\} \tag{7-22a}$$

where

$$[G]^{VM} = \frac{1}{EI}\begin{bmatrix} \dfrac{\ell^3}{3} & \dfrac{\ell^2}{2} \\ \dfrac{\ell^2}{2} & \ell \end{bmatrix} \tag{7-22b}$$

The (2×2) coefficient matrix $[G]^{VM}$ is the flexibility matrix of the beam corresponding to the choice of force variables: a shear force and a bending moment (V, M), respectively.

7.3 Flexibility Matrix

The relationship between the force variables and the deformation variables is established through the flexibility matrix $[G]$ as

$$\{\beta\} = [G]\{F\} \tag{7-23}$$

The flexibility matrix $[G]$ is a symmetrical matrix of dimension $(n \times n)$, n being the number of force unknowns. For beam flexure, which involves two force variables, the flexibility is a (2×2) matrix. For the choice of two bending moments (M_1, M_2), the flexibility matrix is defined in Eq. (7-20*g*). An alternative flexibility matrix for a bending moment and a shear force is defined in Eq. (7-22*b*).

Thermal effect is considered for the temperature variation depicted in Fig. 7-9. The temperature variation at the beam's top surface (at a distance of half depth d; $y = d/2$) is T^U. It is T^L at the bottom surface ($y = -d/2$) as shown in Fig. 7-9*a*. The top and bottom surface temperatures (T^U and T^L) are considered to be uniform across the beam span. The temperature changes linearly across the beam depth as shown in Fig. 7-9*b*. Temperature ($\Delta T(y)$) at a depth y is

$$\Delta T(y) = T_0 + \frac{T^U - T^L}{d} y \tag{7-24}$$

where the temperature at the neutral axis is $T_0 = (T^U + T^L)/2$.

The beam model accommodates transverse shear force and a bending moment, but it neglects the axial force along its x-coordinate axis. A consistent thermal effect

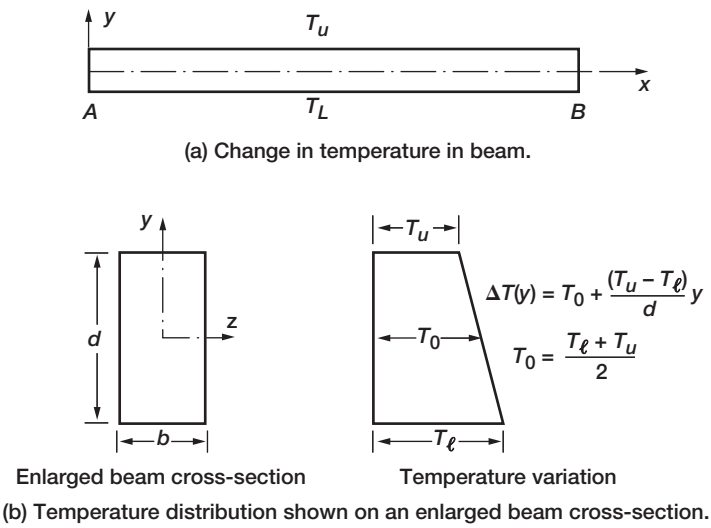

FIGURE 7-9 *Contribution to the DDR from the thermal effect.*

includes variation along the depth, or the term $\{(T^U - T^L)y/d\}$, but it neglects the axial component: $T_0 = (T^U + T^L)/2$. The variation along the depth produces a thermal bending moment (M_T).

The total deformations (β_1 and β_2) are decomposed into elastic (β_1^e and β_2^e) and thermal (β_1^t and β_2^t) components:

$$\beta_1 = \beta_1^e + \beta_1^t$$

$$\beta_2 = \beta_2^e + \beta_2^t \tag{7-25a}$$

The elastic deformations (β_1^e and β_2^e) have already been calculated. Only the thermal deformations (β_1^t and β_2^t) need to be determined. These are calculated from Eq. (7-18a) as

$$\beta_1^t = -\int_0^\ell \frac{M_T}{EI}\frac{\partial \mathcal{M}}{\partial M_1}dx$$

$$\beta_2^t = -\int_0^\ell \frac{M_T}{EI}\frac{\partial \mathcal{M}}{\partial M_2}dx \tag{7-25b}$$

The thermal moment is calculated as

$$M_T = \int_{-d/2}^{d/2} E\alpha\Delta T\, b\, y\, dy$$

$$= E\alpha b \int_{-d/2}^{d/2} \Delta T\, y\, dy$$

$$= E\alpha b \int_{-d/2}^{d/2} \left(\frac{T^L + T^U}{2} + \frac{T^U - T^L}{d}y\right) y\, dy$$

$$= \frac{E\alpha b d^2}{12}(T^U - T^L)$$

$$\beta_1^t = -\left(\frac{M_T}{EI}\right)\int_0^\ell \frac{\partial \mathcal{M}(x)}{\partial M_1}dx$$

$$= -\left(\frac{M_T}{EI}\right)\int_0^\ell \left(1 - \frac{x}{\ell}\right)dx \tag{7-25c}$$

or
$$\beta_1^t = -\frac{\ell M_T}{2EI}$$
$$\beta_2^t = -\frac{M_T}{EI}\int_0^\ell \frac{x}{\ell}dx \tag{7-25d}$$

or
$$\beta_2^t = -\frac{\ell M_T}{2EI} \tag{7-25e}$$

$$\{\beta^t\} = \begin{Bmatrix} -\dfrac{\ell M_T}{2EI} \\ -\dfrac{\ell M_T}{2EI} \end{Bmatrix} \tag{7-25f}$$

The FDR, which includes the contribution from the mechanical load and the thermal effect, with M_1 and M_2 as the internal forces, is obtained by adding individual contributions:

$$\begin{Bmatrix} \beta_1 \\ \beta_2 \end{Bmatrix} = \frac{\ell}{6EI}\begin{bmatrix} 2 & 1 \\ 1 & 2 \end{bmatrix}\begin{Bmatrix} M_1 \\ M_2 \end{Bmatrix} - \frac{\ell M_T}{2EI}\begin{Bmatrix} 1 \\ 1 \end{Bmatrix} \tag{7-26}$$

The FDR with shear force and bending moment (V and M) as the internal forces is obtained in the following steps:

$$\mathcal{M}(x) = M + V(\ell - x)$$
$$\frac{\partial \mathcal{M}(x)}{\partial M} = 1$$
$$\frac{\partial \mathcal{M}(x)}{\partial V} = (\ell - x)$$

$$\beta_1^t = -\frac{M_T}{EI}\int_0^\ell \frac{\partial \mathcal{M}}{\partial V}dx = \frac{-M_T}{EI}\frac{\ell^2}{2}$$
$$\beta_2^t = -\frac{M_T}{EI}\int_0^\ell \frac{\partial \mathcal{M}}{\partial M}dx = \frac{-\ell M_T}{EI}$$

$$\begin{Bmatrix} \beta_1^t \\ \beta_2^t \end{Bmatrix} = \frac{-\ell M_T}{EI}\begin{Bmatrix} \dfrac{\ell}{2} \\ 1 \end{Bmatrix} \tag{7-27}$$

The FDR for thermal and mechanical load, with V and M as internal forces, becomes

$$\begin{Bmatrix} \beta_1 \\ \beta_2 \end{Bmatrix} = \frac{1}{EI}\begin{bmatrix} \dfrac{\ell^3}{3} & \dfrac{\ell^2}{2} \\ \dfrac{\ell^2}{2} & \ell \end{bmatrix}\begin{Bmatrix} V \\ M \end{Bmatrix} - \frac{\ell M_T}{EI}\begin{Bmatrix} \dfrac{\ell}{2} \\ 1 \end{Bmatrix} \tag{7-28}$$

Step 4—Formulate the Force Deformation Relations

Now we continue the solution of the beam for mechanical load. Its FDR for span AC are

$$\beta_1 = \frac{a}{6EI}(2M_1 + M_2)$$
$$\beta_2 = \frac{a}{6EI}(2M_2 + M_1) \tag{7-29a}$$

Likewise, the FDR for beam element CB are

$$\beta_3 = \frac{a}{6EI}(2M_3 + M_4)$$
$$\beta_4 = \frac{a}{6EI}(2M_4 + M_3) \tag{7-29b}$$

Step 5—Express the Compatibility Conditions in Terms of Forces

Elimination of deformations $\{\beta\}$ between the CC and FDR yields the CC in moments:

$$\frac{a}{6EI}\begin{bmatrix} 2 & 1 & -1 & -2 \\ 3 & 3 & 3 & 3 \end{bmatrix}\begin{Bmatrix} M_1 \\ M_2 \\ M_3 \\ M_4 \end{Bmatrix} = \begin{Bmatrix} 0 \\ 0 \end{Bmatrix} \tag{7-30}$$

Step 6—Couple the Equilibrium Equations and Compatibility Conditions to Obtain the IFM Equations, and Solve for the Forces

The IFM Equations are as follows:

$$\begin{bmatrix} 1/a & -1/a & -1/a & 1/a \\ 0 & 1 & -1 & 0 \\ 2 & 1 & -1 & -2 \\ 3 & 3 & 3 & 3 \end{bmatrix}\begin{Bmatrix} M_1 \\ M_2 \\ M_3 \\ M_4 \end{Bmatrix} = \begin{Bmatrix} -P \\ 0 \\ 0 \\ 0 \end{Bmatrix} \tag{7-31}$$

Solution of the IFM equation yields the moments as

$$M_1 = -\frac{P\ell}{8} \quad M_3 = \frac{P\ell}{8}$$
$$M_2 = \frac{P\ell}{8} \quad M_4 = -\frac{P\ell}{8} \tag{7-32}$$

Reactions are back-calculated as (see Fig. 7-5c)

$$R_{vA} = \frac{M_2 - M_1}{a} = \frac{P}{2} \quad R_{mA} = -M_1 = \frac{P\ell}{8}$$
$$R_{vB} = \frac{M_3 - M_4}{a} = \frac{P}{2} \quad R_{mB} = M_4 = -\frac{P\ell}{8} \tag{7-33}$$

Step 7—Back-Calculate the Displacements, if Required, from the Forces

The displacements can be calculated from the deformation displacement relations. The displacement at C under load P is

$$v = a\beta_1 = \frac{a^2}{6EI}(2M_1 + M_2) = -\frac{P\ell^3}{192EI} \tag{7-34}$$

The displacement v is along the negative y-direction, which is also the direction of load P. The slope at C is

$$\theta = \beta_1 + \beta_2 = \frac{a}{6EI}(2M_1 + M_2) + \frac{a}{6EI}(2M_2 + M_1) = \frac{a}{2EI}(M_1 + M_2) = 0 \tag{7-35}$$

Slope θ at C which is the center of the beam span is zero because of symmetry.

Load Case 2—Thermal Load

For thermal analysis, the right side of the compatibility conditions, $\{\delta R\}$, which is a nontrivial vector, is calculated as follows:

$$\{\delta R\} = -[C]\{\beta\}^0 \tag{7-36a}$$

where

$$\{\beta\}^0 = \begin{Bmatrix} \beta_1^t \\ \beta_2^t \\ \beta_3^t \\ \beta_4^t \end{Bmatrix} \tag{7-36b}$$

Thermal deformations for member AC are

$$\begin{aligned} \beta_1^t &= -\frac{aM_T}{2EI} = -\frac{\alpha\Delta Ta}{d} \\ \beta_2^t &= -\frac{aM_T}{2EI} = -\frac{\alpha\Delta Ta}{d} \end{aligned} \tag{7-36c}$$

The thermal deformations for span CB are

$$\begin{aligned} \beta_3^t &= -\frac{aM_T}{2EI} = -\frac{\alpha\Delta Ta}{d} \\ \beta_4^t &= -\frac{aM_T}{2EI} = -\frac{\alpha\Delta Ta}{d} \end{aligned} \tag{7-36d}$$

The effective initial deformation vector $\{\delta R\}$ becomes

$$\{\delta R\} = -\begin{bmatrix} 1 & 0 & 0 & -1 \\ 1 & 1 & 1 & 1 \end{bmatrix}\left(-\frac{\alpha\Delta Ta}{d}\right)\begin{Bmatrix} 1 \\ 1 \\ 1 \\ 1 \end{Bmatrix} = \frac{4\alpha\Delta Ta}{d}\begin{Bmatrix} 0 \\ 1 \end{Bmatrix} \tag{7-37}$$

The IFM governing equation for thermal load can be written as

$$\begin{bmatrix} -1/a & 1/a & 1/a & -1/a \\ 0 & 1 & -1 & 0 \\ 2 & 1 & -1 & -2 \\ 3 & 3 & 3 & 3 \end{bmatrix} \begin{Bmatrix} M_1 \\ M_2 \\ M_3 \\ M_4 \end{Bmatrix} = \begin{Bmatrix} 0 \\ 0 \\ 0 \\ \dfrac{24EI\alpha\Delta T}{d} \end{Bmatrix} \tag{7-38}$$

The fourth component of the right-hand-side vector in Eqs. (7-38) is multiplied by the normalizing factor (6EI). Solution of the IFM equation yields the moments:

$$\begin{Bmatrix} M_1 \\ M_2 \\ M_3 \\ M_4 \end{Bmatrix} = \frac{2EI\alpha\Delta T}{d} \begin{Bmatrix} 1 \\ 1 \\ 1 \\ 1 \end{Bmatrix} \tag{7-39a}$$

The reactions are back-calculated from the moments:

$$\begin{aligned} R_{vA} &= \frac{M_2 - M_1}{a} = 0 \\ R_{vB} &= \frac{M_3 - M_4}{a} = 0 \\ R_{mA} &= -M_1 = -\frac{2EI\alpha\Delta T}{d} \\ R_{mB} &= M_4 = \frac{2EI\alpha\Delta T}{d} \end{aligned} \tag{7-39b}$$

For thermal loads the reactions self-equilibrate.

Displacements can be calculated from the DDR as:

$$v = a\beta_1$$

$$\beta_1 = \beta_1^e + \beta_1^t = \frac{a}{6EI}(2M_1 + M_2) - \frac{\alpha\Delta Ta}{d} = 0$$

$$\text{Likewise,} \quad \beta_2 = 0$$

$$\text{thus,} \quad v = 0$$

$$\text{and} \quad \theta = \beta_1 + \beta_2 = 0 \tag{7-39c}$$

The temperature distribution, which varies along the depth of the beam but is constant across its length, does not induce displacements in the fixed beam. In other words, because the elastic and thermal deformations are equal and opposite, they cancel each other. The beam is stressed because of nontrivial elastic deformations.

Load Case 3—Support Settling

Support settling is also accounted for in $\{\delta R\}$, which is the right side of the *CC*. As before, this vector is calculated as

$$\{\delta R\} = -[C]\{\beta\}^0$$

The initial deformation due to settling of support developed for truss ($\{\beta\}^0 = -[B_R]^T\{\bar{X}\}$) is valid because its derivation had no restriction. However, for a beam the reaction includes moment, and displacement contains rotation. This formula is

$$\{\beta\}^0 = -[B_R]\{\overline{X}\}$$

The prescribed displacement is

$$\{\overline{X}\} = -\begin{Bmatrix} \Delta_A \\ \Delta_B \end{Bmatrix} \tag{7-40}$$

Here, Δ_A and Δ_B are the settling of supports A and B along the negative y-direction, respectively, as shown in Fig. 7-5*a*. The reactions R_{vA} and R_{vB} corresponding to the amounts of settling can be expressed in terms of moments (see Eq. 7-39*b* and Fig. 7-5*c*) as

$$R_{vA} = \begin{Bmatrix} -1/a \\ 1/a \\ 0 \\ 0 \end{Bmatrix}^T \begin{Bmatrix} M_1 \\ M_2 \\ M_3 \\ M_4 \end{Bmatrix} \quad \text{and} \quad R_{vB} = \begin{Bmatrix} 0 \\ 0 \\ 1/a \\ -1/a \end{Bmatrix}^T \begin{Bmatrix} M_1 \\ M_2 \\ M_3 \\ M_4 \end{Bmatrix} \tag{7-41}$$

$$\{\beta\}^0 = -[B_R]\{\overline{X}\} = \begin{bmatrix} -1/a & 0 \\ 1/a & 0 \\ 0 & 1/a \\ 0 & -1/a \end{bmatrix} \begin{Bmatrix} \Delta_A \\ \Delta_B \end{Bmatrix} = \left(\frac{1}{a}\right) \begin{Bmatrix} -\Delta_A \\ \Delta_A \\ \Delta_B \\ -\Delta_B \end{Bmatrix} \tag{7-42}$$

$$\{\delta R\} = -[C]\{\beta\}^0 = -\begin{bmatrix} 1 & 0 & 0 & -1 \\ 1 & 1 & 1 & 1 \end{bmatrix} \left(\frac{1}{a}\right) \begin{Bmatrix} -\Delta_A \\ \Delta_A \\ \Delta_B \\ -\Delta_B \end{Bmatrix} \tag{7-43}$$

$$\text{or} \quad \{\delta R\} = \begin{Bmatrix} \dfrac{\Delta_A - \Delta_B}{a} \\ 0 \end{Bmatrix}$$

The IFM equation for support settling can be written as

$$\begin{bmatrix} -1/a & 1/a & 1/a & -1/a \\ 0 & 1 & -1 & 0 \\ 2 & 1 & -1 & -2 \\ 3 & 3 & 3 & 3 \end{bmatrix} \begin{Bmatrix} M_1 \\ M_2 \\ M_3 \\ M_4 \end{Bmatrix} = \frac{6EI}{a^2} \begin{Bmatrix} 0 \\ 0 \\ \Delta_A - \Delta_B \\ 0 \end{Bmatrix} \tag{7-44}$$

Solution of the IFM equation yields the moments

$$\begin{Bmatrix} M_1 \\ M_2 \\ M_3 \\ M_4 \end{Bmatrix} = \frac{6EI}{\ell^2} \begin{Bmatrix} \Delta_A - \Delta_B \\ 0 \\ 0 \\ \Delta_B - \Delta_A \end{Bmatrix} \tag{7-45a}$$

For an equal amount of settlement ($\Delta_A = \Delta_B$), $M_1 = M_2 = M_3 = M_4 = 0$, and the structure is stress-free. Reactions can be back-calculated from the moments as

$$\begin{aligned} R_{vA} &= \frac{M_2 - M_1}{a} = \frac{12EI(\Delta_B - \Delta_A)}{\ell^3} \\ R_{vB} &= -\frac{12EI(\Delta_B - \Delta_A)}{\ell^3} \\ R_{mA} &= -M_1 = -\frac{6EI(\Delta_A - \Delta_B)}{\ell^2} \\ R_{mB} &= M_4 = \frac{6EI(\Delta_B - \Delta_A)}{\ell^2} \end{aligned} \tag{7-45b}$$

The reactions are self-equilibrating when supports settle and there is no other external load.

Calculation of Displacements

Displacements can be calculated from the deformation displacement relations. The midspan displacement v can be written as

$$\begin{aligned} v &= a\beta_1 = \frac{\ell}{2}\left(\beta_1^e + \beta_1^0\right) \\ \beta_1^e &= \frac{a}{6EI}(2M_1 + M_2) = \frac{\Delta_A - \Delta_B}{\ell} \\ \beta_1^0 &= -2\frac{\Delta_A}{\ell} \\ v &= -\frac{(\Delta_A + \Delta_B)}{2} \end{aligned} \tag{7-45c}$$

The displacement v is along the negative y-direction (or along load P).

The midspan rotation θ can be written as

$$\begin{aligned} \theta &= \beta_1 + \beta_2 \\ \beta_1 &= \beta_1^e + \beta_1^0 = -\frac{(\Delta_A + \Delta_B)}{\ell} \\ \beta_2 &= \beta_2^e + \beta_2^0 \\ \beta_2^e &= \frac{1}{2\ell}(\Delta_A - \Delta_B) \quad \text{and} \quad \beta_2^0 = \frac{2\Delta_A}{\ell} \end{aligned}$$

$$\text{or} \quad \theta = \frac{3(\Delta_A - \Delta_B)}{2\ell} \tag{7-45d}$$

For symmetrical settling of supports ($\Delta_A = \Delta_B$), rotation or slope $\theta = 0$.

7.4 Stiffness Method Analysis for Indeterminate Beam

The stiffness method, formulated for the analysis of truss in Chapter 6, is extended in this chapter for indeterminate beam. The stiffness method analysis steps for beam are the same as for truss with some modification. The method is developed through the example of the clamped beam, earlier used for IFM (see Fig. 7-5*a*). IFM considers the four internal forces (M_1, M_2, M_3, and M_4) as the primary unknowns, and the two displacements (v and θ) are back-calculated from the forces. The stiffness method follows the reverse course. The displacements (v and θ) become the primary variables from which the forces (M_1, M_2, M_3, and M_4) are back-calculated.

The sign convention is somewhat different between the force and the stiffness (or displacement) methods. In IFM, the internal forces follow the *t*-sign convention, but the reactions and displacements follow the *n*-sign convention. In the stiffness method, all variables, the forces, reactions, and displacements, follow the *n*-sign convention, as depicted in Fig. 7-10 for a beam with two nodes (1 and 2) and length $2a$. The origin of the x–y coordinate system is selected at the beam centroid. The displacements at node 1 (v_1, θ_1) and at node 2 (v_2, θ_2) are marked in Fig. 7-10. The forces at node 1 are V_1 and M_1 and at node 2 are V_2 and M_2. The displacements (v_1, θ_1, v_2, θ_2) and forces (M_1, V_1, M_2, V_2) are considered to be positive along the coordinate directions. In IFM, there are two independent forces (M_1 and M_2 or V and M), but the stiffness method considers all four displacements (v_1, θ_1, v_2, θ_2) as its primary unknowns. In IFM, the nodal forces are related to the independent forces through the equilibrium equations, and they are independent of the material property. Considering all four forces to be independent will result in ill-conditioning of the nodal

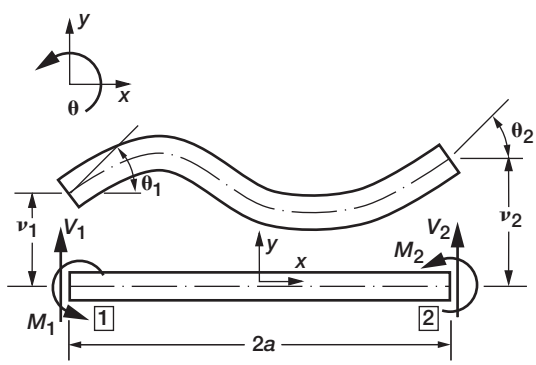

FIGURE 7-10 *Sign convention for the stiffness method.*

EE. The four displacements, however, are independent because the beam is elastic, and its material property controls the magnitude and direction of the displacement variables.

The stiffness method is initiated by expressing the forces in terms of displacements. We will use a direct approach, even though the energy formulation is an elegant alternate method. A consistent relation between displacement and force variables for the sign convention given in Fig. 7-10 is as follows.

$$V_1 = EI\frac{d^3v}{dx^3}(x) \qquad (\text{at } x = -a)$$

$$M_1 = -EI\frac{d^2v}{dx^2} - M_T \quad (\text{at } x = -a)$$

$$V_2 = -EI\frac{d^3v}{dx^3}(x) \qquad (\text{at } x = a)$$

$$M_2 = EI\frac{d^2v}{dx^2} + M_T \quad (\text{at } x = a) \tag{7-46}$$

where the thermal moment (M_T) [see Eq. (7-16b)] is [$M_T = EI\alpha(T^U - T^L)/d = EI\alpha\Delta T/d$] for a rectangular cross-section.

The stiffness formulation requires the displacement function of the beam. A general-function $\{v(x)\}$ for the beam shown in Fig. 7-10 can be developed in terms of its four nodal parameters consisting of two displacements (v_1 and v_2) and two slopes (θ_1 and θ_2) as follows:

$$v(x) = \frac{1}{4}\left[\left\{2 - 3\left(\frac{x}{a}\right) + \left(\frac{x}{a}\right)^3\right\}v_1 + \left\{1 - \left(\frac{x}{a}\right) - \left(\frac{x}{a}\right)^2 + \left(\frac{x}{a}\right)^3\right\}a\theta_1\right.$$
$$\left. + \left\{2 + 3\left(\frac{x}{a}\right) - \left(\frac{x}{a}\right)^3\right\}v_2 + \left\{-1 - \left(\frac{x}{a}\right) + \left(\frac{x}{a}\right)^2 + \left(\frac{x}{a}\right)^3\right\}a\theta_2\right] \tag{7-47a}$$

$$\frac{dv(x)}{dx} = \frac{1}{4}\left[3\left\{-1 + \left(\frac{x}{a}\right)^2\right\}\frac{v_1}{a} + \left\{-1 - 2\left(\frac{x}{a}\right) + 3\left(\frac{x}{a}\right)^2\right\}\theta_1\right.$$
$$\left. + 3\left\{1 - \left(\frac{x}{a}\right)^2\right\}\left(\frac{v_2}{a}\right) + \left\{-1 + 2\left(\frac{x}{a}\right) + 3\left(\frac{x}{a}\right)^2\right\}\theta_2\right] \tag{7-47b}$$

$$\frac{d^2v(x)}{dx^2} = \frac{1}{4}\left[\frac{6x}{a^3}v_1 + \left\{\left(\frac{-2}{a}\right) + \frac{6x}{a^2}\right\}\theta_1 - \frac{6x}{a^3}v_2 + \left\{+\frac{2}{a} + \frac{6x}{a^2}\right\}\right]\theta_2 \tag{7-47c}$$

$$\frac{d^3v(x)}{dx^3} = \frac{3}{2}\left(\frac{v_1}{a^3} + \frac{\theta_1}{a^2} - \frac{v_2}{a^3} + \frac{\theta_2}{a^2}\right) \tag{7-47d}$$

$$\frac{d^4v(x)}{dx^4} = 0 \tag{7-47e}$$

The displacement function $\{v(x)\}$ can be verified to be the solution to the beam equation ($d^4v/dx^4 = q/EI$) for the boundary conditions (v_1, θ_1, v_2, θ_2) and in the absence of transverse load ($q = 0$). It is a cubic polynomial. Its derivatives are given in Eqs. (7-47*b*) to (7-47*e*). Substitution of the derivatives into Eq. (7-46) yields the required force displacement relations.

$$\begin{Bmatrix} V_1 \\ M_1 \\ V_2 \\ M_2 \end{Bmatrix} = \frac{EI}{(2a)^3} \begin{bmatrix} 12 & 12a & -12 & 12a \\ 12a & 16a^2 & -12a & 8a^2 \\ -12 & -12a & 12 & -12a \\ 12a & 8a^2 & -12a & 16a^2 \end{bmatrix} \begin{Bmatrix} v_1 \\ \theta_1 \\ v_2 \\ \theta_2 \end{Bmatrix} - M_T \begin{Bmatrix} 0 \\ 1 \\ 0 \\ -1 \end{Bmatrix} \tag{7-48a}$$

In matrix notation, the force displacement relationship can be written as

$$\{F\} = [K]\{X\} - \{P\}^0 \tag{7-48b}$$

The coefficient matrix $[K]$ is called the stiffness matrix, and it is a symmetrical matrix. The load $\{P\}^0$ is referred to as the equivalent thermal load. Use of Eq. (7-48) to solve a problem is illustrated for the clamped beam shown in Fig. 7-5*a*.

7.5 Stiffness Method for Mechanical Load

There are two displacements (v and θ) at node C for the beam shown in Fig. 7-5*a*. The free-body diagram for the beam using the stiffness method sign convention is shown in Fig. 7-11. The Equilibrium equation along the displacement direction (v) at node C can be written as

$$-(V_2)_{AC} - (V_1)_{CB} - P = 0 \tag{7-49a}$$

The force balance condition in Eq. (7-49*a*) represents the vectorial summation of three forces: (1) the shear force (V_2) at the left node C for beam AC, (2) the shear force (V_1) at the right node C for beam CB, and (3) the external load P. The two shear forces are obtained with the following specialization of Eq. (7-48*a*).

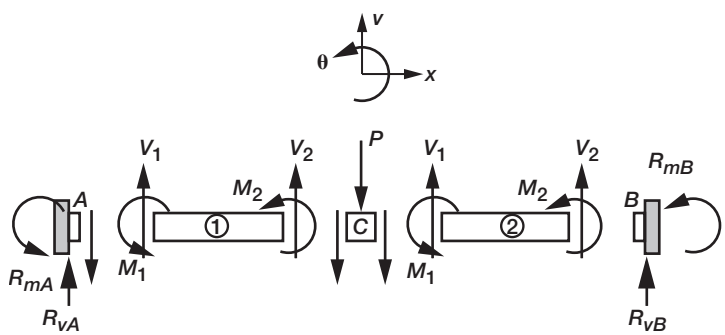

FIGURE 7-11 *Free-body diagram for the stiffness method.*

For beam AC, support node A is fully restrained or $v_1 = 0$ and $\theta_1 = 0$. The free node C has two displacements ($v_2 = v$ and $\theta_2 = \theta$). The shear force (V_2) for beam AC of span ($\ell_{AC} = 0.5\ell = a$) is shown in Fig. 7-5. Note that the half-span in Fig. 7-5 is a, which when it becomes a member in Fig. 7-11 is equal to a full member span.

$$(V_2)_{AC} = \frac{EI}{(a)^3}(12v - 6a\theta) \tag{7-49b}$$

For beam CB, support node B is fully restrained, or $v_2 = 0$ and $\theta_2 = 0$. Node C is free, or $v_1 = v$ and $\theta_1 = \theta$. The shear force (V_1) for beam CB becomes

$$(V_1)_{CB} = \frac{EI}{(a)^3}(12v + 6a\theta) \tag{7-49c}$$

Substitution of Eqs. (7-49b) and (7-49c) into Eq. (7-44a) yields

$$\left(\frac{EI}{a^3}\right)(24v) = -P \tag{7-49d}$$

Likewise, the equilibrium along the rotation direction (θ) can be written as

$$-(M_2)_{AC} - (M_1)_{CB} = 0 \tag{7-50a}$$

The moment balance condition in Eq. (7-50a) represents the vectorial summation of the moment (M_2) at the left node C for the beam AC and the moment (M_1) at the right node C for beam CB. The external moment and thermal moment are zero. The two moments are obtained with the following specialization of Eq. (7-48).

For beam AC, support node A is fully restrained, or $v_1 = 0$ and $\theta_1 = 0$. Node C is free, or $v_2 = v$ and $\theta_2 = \theta$. The moment (M_2) for beam AC becomes

$$(M_2)_{AC} = \frac{EI}{(a)^3}\left(-6av + 4a^2\theta\right) \tag{7-50b}$$

For beam CB, support node B is fully restrained, or $v_2 = 0$ and $\theta_2 = 0$. Node C is free, or $v_1 = v$ and $\theta_1 = \theta$. The moment (M_1) for beam CB becomes

$$(M_1)_{CB} = \frac{EI}{(a)^3}\left(6av + 4a^2\theta\right) \tag{7-50c}$$

Substitution of Eqs. (7-50b) and (7-50c) into Eq. (7-50a) yields

$$\frac{EI}{(a)^3}\left(-8a^2\theta\right) = 0 \tag{7-50d}$$

Equations (7-49*d*) and (7-50*d*) are combined to obtain the stiffness equation for the beam:

$$\frac{EI}{(a)^3}\begin{bmatrix} 24 & 0 \\ 0 & 8a^2 \end{bmatrix}\begin{Bmatrix} v \\ \theta \end{Bmatrix} = \begin{Bmatrix} -P \\ 0 \end{Bmatrix} \tag{7-51}$$

The stiffness equation is uncoupled because the structure is symmetrical about center C, with $\theta = 0$. In most applications, the symmetrical stiffness matrix is not a diagonal matrix. Solution of Eq. (7-51) yields the displacements as

$$v = \frac{-Pa^3}{24EI} = \frac{-P\ell^3}{192EI} \tag{7-52a}$$

$$\theta = 0 \tag{7-52b}$$

The nodal forces in the beam AC and beam BC are back-calculated as

$$\begin{Bmatrix} V_1 \\ M_1 \\ V_2 \\ M_2 \end{Bmatrix}^{\text{Beam } AC} = \left(\frac{EI}{a^3}\right)\begin{bmatrix} 12 & 6a & -12 & 6a \\ 12a & a^2 & -12a & 8a^2 \\ -12 & -6a & 12 & -12a \\ 12a & 8a^2 & -12a & 16a^2 \end{bmatrix}\begin{Bmatrix} 0 \\ 0 \\ -\frac{Pa^3}{24EI} \\ 0 \end{Bmatrix} = \begin{Bmatrix} \frac{P}{2} \\ \frac{Pa}{2} \\ -\frac{P}{2} \\ \frac{Pa}{2} \end{Bmatrix} \tag{7-53a}$$

$$\begin{Bmatrix} V_1 \\ M_1 \\ V_2 \\ M_2 \end{Bmatrix}^{\text{Beam } CB} = \left(\frac{EI}{a^3}\right)\begin{bmatrix} 12 & 12a & -12 & 12a \\ 12a & 16a^2 & -12a & -8a^2 \\ -12 & -12a & 12 & -12a \\ 12a & 8a^2 & -12a & 16a^2 \end{bmatrix}\begin{Bmatrix} -\frac{Pa^3}{24EI} \\ 0 \\ 0 \\ 0 \end{Bmatrix} = \begin{Bmatrix} -\frac{P}{2} \\ -\frac{Pa}{2} \\ \frac{P}{2} \\ -\frac{Pa}{2} \end{Bmatrix} \tag{7-53b}$$

The reactions are obtained from the free-body diagram shown in Fig. 7-11.

$$\begin{aligned} R_{vA} &= V_1^{AC} = \frac{P}{2} \\ R_{mA} &= M_1^{AC} = \frac{P\ell}{8} \\ R_{vB} &= V_2^{CB} = \frac{P}{2} \\ R_{mB} &= M_2^{CB} = -\frac{P\ell}{8} \end{aligned} \tag{7-53c}$$

The response obtained by the stiffness method is in agreement with the IFM solution.

7.6 Stiffness Solution for Thermal Load

Solution for thermal load is obtained by retaining the thermal moment M^T in Eq. (7-48*a*). The thermal load has no contribution to the shear force (V_1 and V_2). The first stiffness

equation (Eq. 7-51) is not changed except that the load is set to zero ($P = 0$). The moments retaining the thermal effect are as follows:

$$(M_2)_{AC} = \frac{EI}{a^3}\left(-6av + 4a^2\theta\right) + M_T \tag{7-54a}$$

$$(M_1)_{CB} = \frac{EI}{a^3}\left(6av + 4a^2\theta\right) - M_T \tag{7-54b}$$

Because the thermal moments cancel out, the EE along the θ direction, Eq. (7-50a), which is the second stiffness equation, is not changed.

$$8EI\frac{\theta}{a} = 0 \tag{7-54c}$$

The stiffness equation becomes

$$\frac{EI}{a^3}\begin{bmatrix} 24 & 0 \\ 0 & 8a^2 \end{bmatrix}\begin{Bmatrix} v \\ \theta \end{Bmatrix} = \begin{Bmatrix} 0 \\ 0 \end{Bmatrix} \tag{7-54d}$$

Equation (7-54*d*) yields a trivial solution:

$$v = \theta = 0 \tag{7-54e}$$

The internal forces in the beam are back-calculated from Eq. (7-48*a*) to obtain

$$\begin{Bmatrix} V_1 \\ M_1 \\ V_2 \\ M_2 \end{Bmatrix}^{\text{Beam } AC} = \left(\frac{EI}{a^3}\right)\begin{bmatrix} 12 & 6a & -12 & 6a \\ 6a & 4a^2 & -6a & 2a \\ -12 & -6a & 12 & -6a \\ 6a & 2a & -6a & 4a^2 \end{bmatrix}\begin{Bmatrix} 0 \\ 0 \\ 0 \\ 0 \end{Bmatrix} - \begin{Bmatrix} 0 \\ M_T \\ 0 \\ -M_T \end{Bmatrix} = \begin{Bmatrix} 0 \\ -M_T \\ 0 \\ M_T \end{Bmatrix} \tag{7-55a}$$

$$\begin{Bmatrix} V_1 \\ M_1 \\ V_2 \\ M_2 \end{Bmatrix}^{\text{Beam } CB} = \begin{Bmatrix} 0 \\ -M_T \\ 0 \\ M_T \end{Bmatrix} \tag{7-55b}$$

The reactions obtained from the free-body diagram shown in Fig. 7-11 are as follows:

$$\begin{aligned} R_{vA} &= R_{vB} = 0 \\ R_{mA} &= -M_T \\ R_{mB} &= M_T \end{aligned} \tag{7-55c}$$

The reactions self-equilibrate. The thermal load induced moments in the beam but not shear force or displacement.

7.7 Stiffness Solution for Support Settling

The stiffness solution for support settling is obtained by retaining the specified settling of the support as the initial displacement while writing the stiffness equations. The stiffness equations already developed for thermomechanical loads are adjusted, but no new equation has to be developed.

For the clamped beam, the stiffness equations have to be written to account for four displacement components—two unknown displacements (v and θ) at node C and the initial displacements at node A ($-\Delta_A$) and node B ($-\Delta_B$) due to support settling. The EE is still written along the unknown displacement directions (v and θ), but the force variables are expressed in terms of four displacements. The EE without any mechanical and thermal loads are

$$-\left((V_2)_{AC} + (V_1)_{CB}\right) = 0 \tag{7-56a}$$

$$-\left((M_2)_{AC} + (M_1)_{CB}\right) = 0 \tag{7-56b}$$

The force variables in terms of displacements are as follows:

$$(V_2)_{AC} = \frac{EI}{a^3}(12v - 6a\theta) + \frac{EI}{a^3}(+12\Delta_A) \tag{7-57a}$$

$$(V_1)_{CB} = \frac{EI}{a^3}(12v + 6a\theta) + \frac{EI}{a^3}(+12\Delta_B) \tag{7-57b}$$

$$(M_2)_{AC} = \frac{EI}{a^3}\left(-6av + 4a^2\theta\right) - \frac{EI}{a^3}(6a\Delta_A) \tag{7-57c}$$

$$(M_1)_{CB} = \frac{EI}{a^3}\left(6av + 4a^2\theta\right) - \frac{EI}{a^3}(-6a\Delta_B) \tag{7-57d}$$

The two stiffness equations are

$$\left(\frac{EI}{a^3}\right)\begin{bmatrix} 24 & 0 \\ 0 & 8a^2 \end{bmatrix}\begin{Bmatrix} v \\ \theta \end{Bmatrix} + \left(\frac{EI}{a^3}\right)\begin{bmatrix} +12 & +12 \\ -6a & +6a \end{bmatrix}\begin{Bmatrix} \Delta_A \\ \Delta_B \end{Bmatrix} = \begin{Bmatrix} 0 \\ 0 \end{Bmatrix} \tag{7-58}$$

$$\{P^S\} = -\left(\frac{EI}{a^3}\right)\begin{Bmatrix} 12(\Delta_A + \Delta_B) \\ -6a(\Delta_A - \Delta_B) \end{Bmatrix} \tag{7-59}$$

The load term $\{P^S\}$ defined in Eq. (7-59) is referred to as the equivalent load because of support settling. It is a function of the displacements (Δ_A and Δ_B) and the beam stiffness. The stiffness equation (Eq. 7-58) in matrix notation can be written as $[K]\{X\} = \{P^S\}$. Its solution yields the displacement.

$$v = -\frac{1}{2}(\Delta_A + \Delta_B)$$

$$\theta = \frac{3}{4a}(\Delta_A - \Delta_B) \tag{7-60}$$

The beam forces are back-calculated from the stiffness equations (Eq. 7-48a). For the beam AC, the displacements are $v_1 = -\Delta_A$, $\theta_1 = 0$, $v_2 = v$, and $\theta_2 = \theta$, and there is no thermal moment ($M^T = 0$). The beam forces are

$$\begin{Bmatrix} V_1 \\ M_1 \\ V_2 \\ M_2 \end{Bmatrix}^{\text{Beam } AC} = \left(\frac{EI}{a^3}\right) \begin{bmatrix} 12 & 6a & -12 & 6a \\ 6a & 4a^2 & -6a & 2a^2 \\ -12 & -6a & 12 & -6a \\ 6a & 2a^2 & -6a & 4a^2 \end{bmatrix} \begin{Bmatrix} -\Delta_A \\ 0 \\ -\frac{\Delta_A + \Delta_B}{2} \\ \frac{3}{4a}(\Delta_A - \Delta_B) \end{Bmatrix} = \left(\frac{12EI}{\ell^3}\right) \begin{Bmatrix} (\Delta_B - \Delta_A) \\ \frac{(\Delta_B - \Delta_A)\ell}{2} \\ (\Delta_A - \Delta_B) \\ 0 \end{Bmatrix} \tag{7-61a}$$

Likewise, the forces for the beam CB are back-calculated for its displacements ($v_1 = v$, $\theta_1 = \theta$, $v_2 = v_B$, and $\theta_2 = 0$), and there is no thermal moment ($M^T = 0$).

$$\begin{Bmatrix} V_1 \\ M_1 \\ V_2 \\ M_2 \end{Bmatrix}^{\text{Beam } CB} = \left(\frac{12EI}{\ell^3}\right) \begin{Bmatrix} (\Delta_B - \Delta_A) \\ 0 \\ (\Delta_A - \Delta_B) \\ \frac{(\Delta_B - \Delta_A)}{2\ell} \end{Bmatrix} \tag{7-61b}$$

The reactions obtained from the free-body diagram shown in Fig. 7-11 are as follows:

$$R_{vA} = (V_1)_{AC} = \frac{12EI}{\ell^3}(\Delta_B - \Delta_A)$$

$$R_{mA} = (M_1)_{AC} = \frac{6EI}{\ell^2}(\Delta_B - \Delta_A)$$

$$R_{vB} = (V_2)_{CB} = -\frac{12EI}{\ell^3}(\Delta_B - \Delta_A)$$

$$R_{mB} = (M_2)_{CB} = -\frac{6EI}{\ell^2}(\Delta_A - \Delta_B) \tag{7-61c}$$

EXAMPLE 7-4: Propped Cantilevered Beam under a Uniform Load

A propped cantilevered beam of length ℓ is subjected to a uniformly distributed load of intensity q per unit length as shown in Fig. 7-12a. The beam, which is made of steel with a Young's modulus E of 30,000 ksi, has a depth d of 2 in. and a width b of 1 in. Solve the problem for forces and displacements.

IFM Solution for a Propped Beam

Step 0—Solution Strategy

For this problem, conventional coordinate axes (x, y) and the origin at A are defined in Fig. 7-12a. In addition, the abscissa ($\bar{x}$) with its origin at B is defined because this choice reduces some calculations. We solve the problem by considering three reactions as unknowns ($n = 3$). These are the moment M and shear force V at the fixed support and the shear force R at the hinged support (see Fig. 7-12b). For the beam, two overall equilibrium equations—one rotational EE and one transverse EE—can be written. The two displacement variables (θ and ν) correspond to the dual variables of the rotational and transverse EE, respectively, and $m = 2$. The problem is one-degree indeterminate because $r = n - m = 1$. The displacement ($w(x)$), which is a function of x, has to be calculated because of the distributed nature of the load q. Since the beam is uniform, the solution is obtained in terms of EI, where I is the beam's moment of inertia.

Step 1—Formulate the Equilibrium Equations

Summation of the moment and shear force provides two EE in terms of three unknown forces (V, R, M). The rotational or moment equilibrium at the hinge point B yields the first EE.

$$-\left(M - V\ell + \frac{q\ell^2}{2}\right) = 0 \tag{7-62a}$$

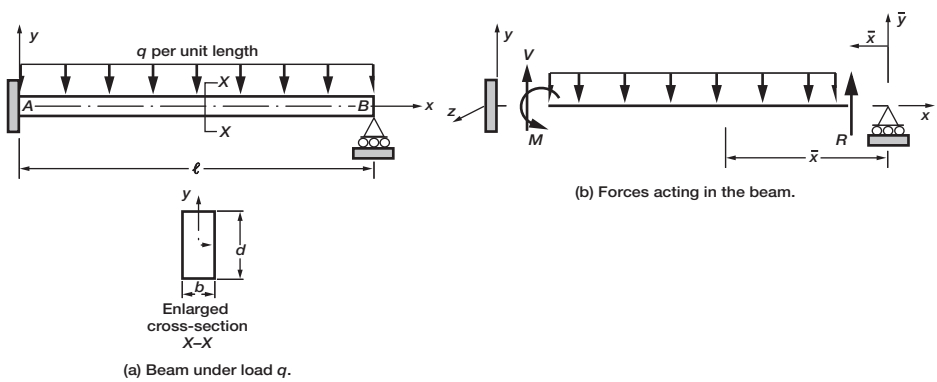

FIGURE 7-12 *Propped beam under uniform load.*

The force equilibrium along the transverse direction is the second EE:

$$-(V + R - q\ell) = 0 \tag{7-62b}$$

The two EE in terms of the three reactions (V, R, M) can be written in matrix notation as

$$-\begin{bmatrix} \ell & 0 & -1 \\ -1 & -1 & 0 \end{bmatrix} \begin{Bmatrix} V \\ R \\ M \end{Bmatrix} = -\begin{Bmatrix} \frac{q\ell^2}{2} \\ -q\ell \end{Bmatrix} \tag{7-62c}$$

The equilibrium equations are one-degree indeterminate because three unknown reactions (V, R, M) are expressed in terms of two equations. One compatibility condition is required to solve the problem.

Step 2—Derive the Deformation Displacement Relations

The DDR ($\{\beta\} = [B]^T\{X\}$) have the following form:

$$\begin{Bmatrix} \beta_v \\ \beta_r \\ \beta_m \end{Bmatrix} = -\begin{bmatrix} \ell & -1 \\ 0 & -1 \\ -1 & 0 \end{bmatrix} \begin{Bmatrix} \theta \\ v \end{Bmatrix} \tag{7-63}$$

In the DDR, the deformations (β_v, β_r, β_m) correspond to the reactions (V, M, R), respectively. The displacements (θ, v) are the dual variables of the moment and transverse equilibrium equations, respectively.

Step 3—Generate the Compatibility Conditions

The single compatibility condition is obtained by eliminating the two displacements (θ, v) from the three DDR:

$$\begin{bmatrix} 1 & -1 & \ell \end{bmatrix} \begin{Bmatrix} \beta_v \\ \beta_r \\ \beta_m \end{Bmatrix} = \{0\} \tag{7-64}$$

The correctness of the CC can be verified from its null property ($[B][C]^T = [0]$):

$$-\begin{bmatrix} \ell & 0 & -1 \\ -1 & -1 & 0 \end{bmatrix} \begin{bmatrix} 1 \\ -1 \\ \ell \end{bmatrix} = \begin{bmatrix} 0 \\ 0 \end{bmatrix} \tag{7-65}$$

Step 4—Formulate the Force Deformation Relations

We can express the compatibility conditions ($[C]\{\beta\} = 0$) in terms of reactions by using the FDR, which can be obtained as the derivatives of the strain energy U as given by Eq. (7-18a).

$$\beta_v = \frac{\partial U}{\partial V} = \int_0^\ell \frac{\mathcal{M}}{EI}\frac{\partial \mathcal{M}}{\partial V}dx$$

$$\beta_r = \frac{\partial U}{\partial R} = \int_0^\ell \frac{\mathcal{M}}{EI}\frac{\partial \mathcal{M}}{\partial R}dx$$

$$\beta_m = \frac{\partial U}{\partial M} = \int_0^\ell \frac{\mathcal{M}}{EI}\frac{\partial \mathcal{M}}{\partial M}dx \tag{7-66a}$$

where the strain energy U for the beam can be written in terms of moment $\mathcal{M}$ as [see Eq. (7-17)]

$$U = \int_0^\ell \frac{\mathcal{M}^2}{2EI}dx \tag{7-66b}$$

For strain energy calculations, either point A or B (see Fig. 7-12b) can be selected as the origin without any adverse consequence. When point A is selected as the origin, the moment ($\mathcal{M}(x)$) has to be written in terms of two unknowns (M and V). However, when B is selected as the origin with an axis $\bar{x}$ from B to A, as shown in Fig. 7-12b, the moment ($\mathcal{M}(\bar{x})$) can be written in terms of a single reaction unknown (R). To reduce the number of calculations, we select B as the origin with axis $\bar{x}$. The reader, however, could select the conventional axis x and arrive at the same results.

$$\mathcal{M}(\bar{x}) = R\bar{x} - \frac{q\bar{x}^2}{2} \tag{7-66c}$$

The derivatives are $\partial\mathcal{M}/\partial V = 0$, $\partial\mathcal{M}/\partial R = \bar{x}$, and $\partial\mathcal{M}/\partial M = 0$. Thus, the deformation $\beta_v = \beta_m = 0$. The deformation β_r can be calculated as

$$\beta_r = \frac{1}{EI}\int_0^\ell \left[R\bar{x} - \frac{q\bar{x}^2}{2}\right](\bar{x})\,d\bar{x} \tag{7-66d}$$

Integration yields the deformation, as

$$\beta_r = \frac{1}{EI}\left(\frac{R\ell^3}{3} - \frac{q\ell^4}{8}\right) \tag{7-66e}$$

Step 5—Express the Compatibility Conditions in Terms of Forces

In terms of force variables, the compatibility condition can be written as

$$\begin{bmatrix} 0 & \frac{\ell^3}{3EI} & 0 \end{bmatrix}\begin{Bmatrix} V \\ R \\ M \end{Bmatrix} = \left\{\frac{q\ell^4}{8EI}\right\}$$

or

$$[0 \quad 1 \quad 0]\begin{Bmatrix} V \\ R \\ M \end{Bmatrix} = \left\{\frac{3q\ell}{8}\right\} \tag{7-66f}$$

Notice that the CC, which is an uncoupled equation, is nonhomogeneous because of the distributed nature of load q.

Step 6—Couple the Equilibrium Equations and Compatibility Conditions to Obtain the IFM Equations, and Solve for the Forces

The compatibility condition can be coupled to the equilibrium equations to obtain three equations in terms of three unknown force variables:

$$\begin{bmatrix} \ell & 0 & -1 \\ -1 & -1 & 0 \\ 0 & 1 & 0 \end{bmatrix}\begin{Bmatrix} V \\ R \\ M \end{Bmatrix} = \begin{Bmatrix} \frac{q\ell^2}{2} \\ -q\ell \\ \frac{3q\ell}{8} \end{Bmatrix} \tag{7-67a}$$

Solution of the equation yields the three reactions as

$$\begin{Bmatrix} V \\ R \\ M \end{Bmatrix} = \begin{Bmatrix} \frac{5q\ell}{8} \\ \frac{3q\ell}{8} \\ \frac{q\ell^2}{8} \end{Bmatrix} \tag{7-67b}$$

The moment function $\mathcal{M}(\bar{x})$ given by Eq. (7-66c) can be rewritten in terms of load q as

$$\mathcal{M}(\bar{x}) = \frac{3q\ell\bar{x}}{8} - \frac{q\bar{x}^2}{2}$$

Step 7—Back-Calculate the Displacements, if Required, from the Forces

Because the load is distributed along the span of the beam, the transverse displacement is a function of $\bar{x}$, that is, $v(\bar{x})$. The moment curvature relation ($\kappa(\bar{x})$) has to be integrated to determine the displacement function $v(\bar{x})$.

$$\kappa = \frac{M}{EI} = \frac{d^2v}{dx^2} \tag{7-68a}$$

For the problem, the moment curvature relation can be written as

$$\kappa(\bar{x}) = \frac{d^2v(\bar{x})}{d\bar{x}^2} = \frac{\mathcal{M}}{EI} = \left(\frac{1}{EI}\right)\left(\frac{3q\ell\bar{x}}{8} - \frac{q\bar{x}^2}{2}\right) \tag{7-68b}$$

Integrating the moment curvature relation yields the displacement function:

$$v(\bar{x}) = \frac{1}{EI}\left(\frac{q\ell\bar{x}^3}{16} - \frac{q\bar{x}^4}{24} + c_1\bar{x} + c_2\right) \tag{7-68c}$$

The integration constants in the displacement function can be determined from the kinematic displacement boundary conditions, which are essential for the stability of the structure. The number of kinematic conditions N_{kbc} can be calculated as the difference between the total number of displacement boundary conditions N_{tbc} and the number of compatibility conditions r:

$$N_{kbc} = N_{tbc} - r \tag{7-68d}$$

For this problem, $N_{tbc} = 3$, $r = 1$, and $N_{kbc} = 2$. The three displacement boundary conditions are

$$\begin{aligned} BC{-}1 &\Rightarrow v(\bar{x}) = 0 \quad \text{at} \quad \bar{x} = 0 \\ BC{-}2 &\Rightarrow v(\bar{x}) = 0 \quad \text{at} \quad \bar{x} = \ell \\ BC{-}3 &\Rightarrow \frac{dv(\bar{x})}{d\bar{x}} = 0 \quad \text{at} \quad \bar{x} = \ell \end{aligned} \tag{7-68e}$$

Any two of the three displacement boundary conditions are sufficient for determining the two constants of integration (c_1, c_2) in Eq. (7-68c). The boundary conditions (BC–1) and (BC–2) are used to determine the constants, as follows:

$$\begin{aligned} c_2 &= 0 \\ c_1 &= -\frac{q\ell^3}{48} \end{aligned}$$

The displacement function has the following explicit form:

$$v(\bar{x}) = \frac{q}{EI}\left(\frac{\ell\bar{x}^3}{16} - \frac{\bar{x}^4}{24} - \frac{\ell^3\bar{x}}{48}\right) \tag{7-68f}$$

The reader can verify the compliance of the slope boundary condition (BC–3) at the fixed end.

The maximum displacement can be determined from principles of calculus as

$$v_{\max} = \frac{-q\ell^4}{185EI} = -\frac{0.0054q\ell^4}{EI} \quad \text{at} \quad \bar{x} = \ell(1 + \sqrt{33}) = 0.4215\ell \tag{7-68g}$$

where v is considered to be positive along the y-axis. The load q, however, is along the negative axis, which is also the direction of displacement; or displacement is along the negative y-axis.

Maximum slope, which occurs at the propped end at $\bar{x} = 0$, is

$$\theta_{\max} = \frac{-q\ell^3}{48EI} \tag{7-68h}$$

The slope $\left(\frac{dv}{d\bar{x}} = -\frac{dv}{dx}\right)$ is positive along the positive x-axis (which also represents the negative $\bar{x}$-axis). Likewise, the peak value of the positive bending moment is

$$M_{\text{peak}} = \frac{9q\ell^2}{128} \quad \text{at} \quad \bar{x} = \frac{3\ell}{8} \tag{7-68i}$$

7.8 Stiffness Method Solution to the Propped Beam

In the stiffness method, the solution is obtained by extending the moment curvature relation to include the transverse load (q). It is then integrated to obtain the displacement function in terms of constants of integration. The constants are adjusted for the boundary conditions to obtain the displacement function. Differentiation of Eq. (7-47a) four times with respect to the x-coordinate yields the differential equation that relates the transverse displacement (v) and the uniformly distributed load (q) as

$$\frac{d^4v}{d\bar{x}^4} = -\frac{q}{EI} \tag{7-69a}$$

$$\frac{d^3v}{d\bar{x}^3} = -\frac{q\bar{x}}{EI} + d_1 \tag{7-69b}$$

$$\frac{d^2v}{d\bar{x}^2} = -\frac{q\bar{x}^2}{2EI} + d_1\bar{x} + d_2 \tag{7-69c}$$

$$\frac{dv}{d\bar{x}} = -\frac{q\bar{x}^3}{6EI} + \frac{d_1\bar{x}^2}{2} + d_2\bar{x} + d_3 \tag{7-69d}$$

$$v(\bar{x}) = -\frac{q\bar{x}^4}{24EI} + \frac{d_1\bar{x}^3}{6} + \frac{d_2\bar{x}^2}{2} + d_3\bar{x} + d_4 \tag{7-69e}$$

The fourth-order displacement function $v(\bar{x})$ is defined in terms of four constants (d_1 to d_4). To simplify calculations, we redefine the constants by absorbing the numerical coefficients. This process has no consequence on the response. The displacement function can be rewritten as

$$v(\bar{x}) = -\frac{q\bar{x}^4}{24EI} + q_1\bar{x}^3 + q_2\bar{x}^2 + q_3\bar{x} + q_4 \tag{7-70}$$

The four constants of integration (q_1 to q_4) are calculated from the four boundary conditions of the problem:

$$v(\bar{x}) = 0 \quad \text{at} \quad \bar{x} = 0, \quad \text{or} \quad q_4 = 0 \tag{7-71a}$$

$$M = EI\frac{d^2v}{d\bar{x}^2} = 0 \quad \text{at} \quad \bar{x} = 0, \quad \text{or} \quad q_2 = 0 \tag{7-71b}$$

$$v(\bar{x}) = 0 \quad \text{at} \quad \bar{x} = \ell, \text{yields} -\frac{q\ell^4}{24EI} + q_1\ell^3 + q_3\ell = 0 \tag{7-71c}$$

$$\frac{dv}{dx}(\bar{x}) = 0 \quad \text{at} \quad \bar{x} = \ell, \text{yields} -\frac{q\ell^3}{6EI} + 3q_1\ell^2 + q_3 = 0 \tag{7-71d}$$

The two nontrivial boundary conditions can be written in matrix notation as

$$\begin{bmatrix} \ell^3 & \ell \\ 3\ell^2 & 1 \end{bmatrix} \begin{Bmatrix} q_1 \\ q_3 \end{Bmatrix} = \frac{q\ell^3}{24EI} \begin{Bmatrix} \ell \\ 4 \end{Bmatrix} \tag{7-71e}$$

Solution to Eq. (7-71e) yields

$$\begin{aligned} q_1 &= \frac{q\ell}{16EI} \\ q_3 &= -\frac{q\ell^3}{48EI} \\ q_2 &= q_4 = 0 \end{aligned} \tag{7-71f}$$

The displacement function becomes

$$v(\bar{x}) = \frac{q}{EI}\left(\frac{\ell\bar{x}^3}{16} - \frac{\bar{x}^4}{24} - \frac{\ell^3\bar{x}}{48}\right) \tag{7-71g}$$

It is identical to the function calculated in IFM.

The internal forces are calculated by differentiating the displacement function.

$$V = EI\frac{d^3v}{d\bar{x}^3}(\bar{x} = \ell) = \frac{5}{8}q\ell \tag{7-71h}$$

$$R = V(\bar{x} = 0) = EI\frac{d^3v}{d\bar{x}^3}(\bar{x} = 0) = \frac{3}{8}q\ell \tag{7-71i}$$

$$M = M(\bar{x} = \ell) = -EI\frac{d^2v}{d\bar{x}^2}(\bar{x} = \ell) = \frac{q}{EI}\left(\frac{\bar{x}^2}{2} - \frac{3\ell\bar{x}}{8}\right) = \frac{q\ell^2}{8} \tag{7-71j}$$

The forces (V, R, M) calculated from the stiffness method are in agreement with the IFM solution.

EXAMPLE 7-5: Analysis of a Three-Span Beam

The selection of primary variables in the IFM and the stiffness method is illustrated by considering the example of a three-span beam subjected to a uniformly distributed load, as shown in Fig. 7-13*a*. In IFM, any one of the following three sets of forces can be selected as the primary variables.

1. A shear force and a bending moment for each span, or a total of six variables (V_1, M_1, V_2, M_2, V_3, M_3). This model is depicted in Fig. 7-13*b*.

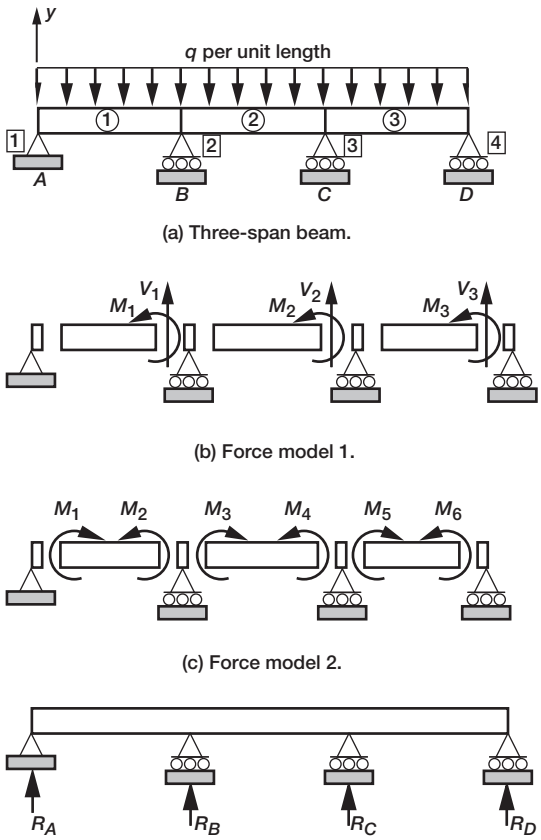

(a) Three-span beam.

(b) Force model 1.

(c) Force model 2.

(d) Force model 3.

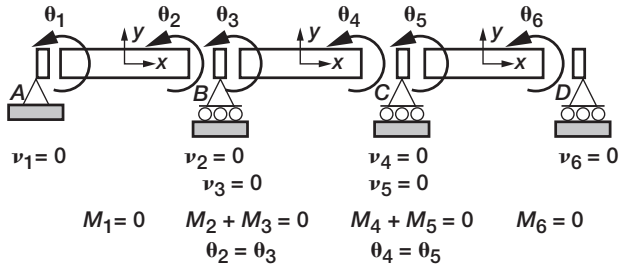

(e) Model for stiffness method.

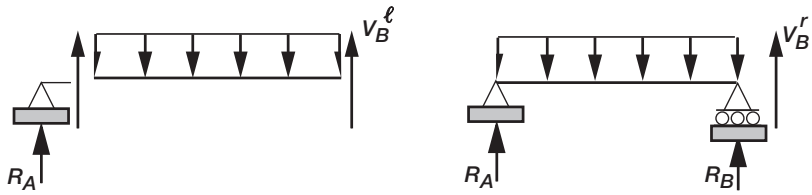

(f) Shear force to the left and right of support *B*.

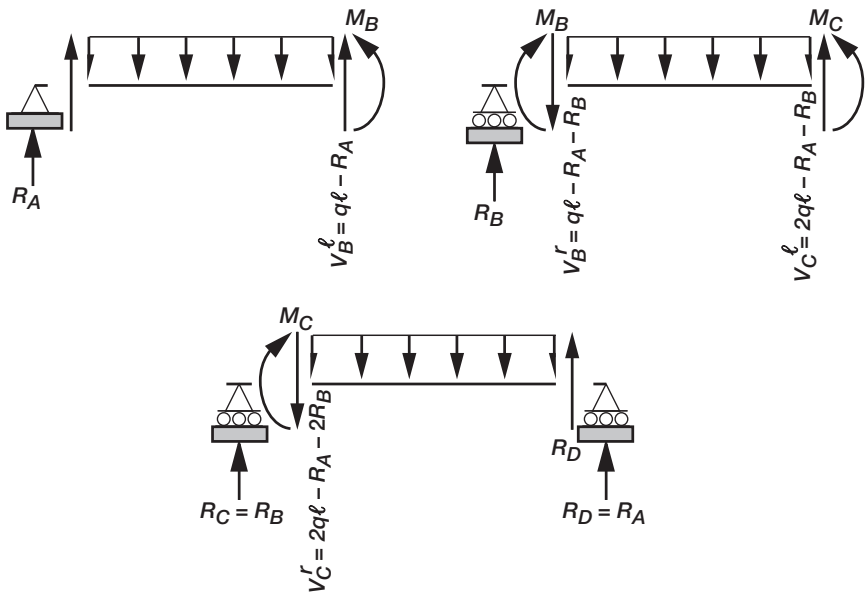

(g) Free-body diagram for the beam.

FIGURE 7-13 *continued*

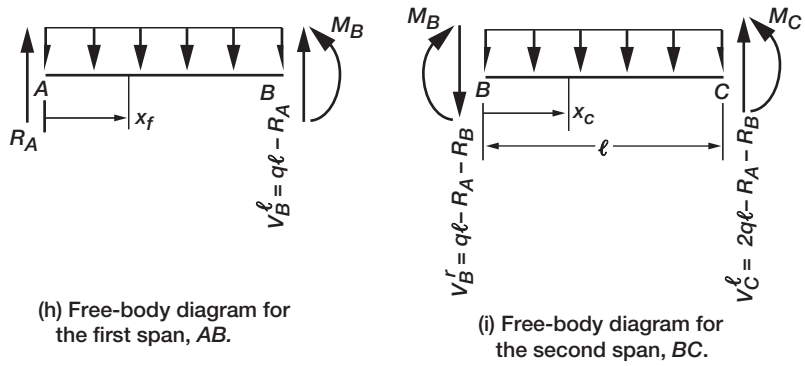

FIGURE 7-13 *Analysis of a three-span beam under a distributed load.*

2. Two bending moments for each span, or a total of six variables (M_1, M_2, M_3, M_4, M_5, M_6), as shown in Fig. 7-13*c*. Both the models (1 and 2) have four displacements (θ_1, θ_2, θ_3, θ_4), which are the nodal rotations at the support nodes 1 to 4. The structure is two degrees indeterminate because there are six unknown forces ($n = 6$) and four displacements ($m = 4$; $r = 6 - 4 = 2$). The IFM model has a total of six equations: four EE written along the four rotations and two compatibility conditions. From the forces, the reactions and the displacements can be back-calculated.
3. The model with four reactions (R_A to R_D) as the unknowns, shown in Fig. 7-13*d*, is also acceptable for IFM analysis. When reactions are considered as the unknowns then a maximum of three system EE can be written. There is one equilibrium equation along the *x*-coordinate direction, but this cannot be used because there is no force along the *x*-axis and it becomes trivial. There is one EE along the *y*-coordinate axis and one rotational EE, or a total of two EE. There are four unknowns but only two EE can be written. The problem is two-degrees indeterminate, and its solution requires two compatibility conditions. A choice of force unknowns does not alter the degree of indeterminacy.

The stiffness model for a beam member with distributed load is shown in Fig. 7-13*e*. Each span of the beam can have four unknown nodal displacements: two transverse displacements (v_1, v_2) and two rotations (θ_1, θ_2) at the nodes 1 and 2. The three-span beam has a total of 12 unknown nodal displacements. These unknowns are determined from a set of 12 boundary conditions, as follows.

1. There are six null conditions on the displacements.

$$v_1 = v_2 = v_3 = v_4 = v_5 = v_6 = 0$$

   The beam has no nodal displacement.

2. There are four conditions on the moments:

$M = 0$ at nodes 1 and 4, or $M_1 = M_4 = 0$ as shown in Fig. 7-13*e*.

The moment M^L to the left of a node equilibrates with the moment to the right (M^R). In force method sign convention, ($M_2 = M_3$) and ($M_4 = M_5$). These will be cast in stiffness method convention during solution as ($M_2 + M_3 = 0$) and ($M_4 + M_5 = 0$).

3. There are two conditions on rotations: $\theta^L = \theta^R$ at nodes 2 and 3, or $\theta_2 = \theta_3$ and $\theta_4 = \theta_5$.

The problem is solved by IFM using the three reactions as the primary unknowns and then it is solved by the stiffness method.

7.9 IFM Solution to Example 7-5

The parameters of the three-span continuous beam made of a single material, shown in Fig. 7-13*a*, are:

1. Uniformly distributed load intensity (q) per unit length.
2. Each span has a length ℓ, and a uniform EI.

Analyze the beam for moment and displacement.

Step 0—Solution Strategy

The coordinate system (x, y) with its origin at A is shown in Fig. 7-13*a*. Four reactions (R_A, R_B, R_C, R_D) are considered as the force unknowns of the problem, or $n = 4$. Two independent EE (one transverse EE, $\Sigma V = 0$, and one rotational EE, $\Sigma M = 0$) can be written, or $m = 2$. The beam is two-degrees indeterminate ($r = n - m = 2$). We can, however, use the symmetry condition ($R_A = R_D$ and $R_B = R_C$) to reduce it to a two-variable problem. This two-variable problem has one independent EE and one CC.

Calculation of Shear Force

Shear forces at the left and right of support B (V_B^ℓ, V_B^r) and likewise at support C (V_C^ℓ, V_C^r) are defined in Fig. 7-13*f*. These shear forces can be calculated from the diagrams shown in Fig. 7-13*f*.

$$R_A + V_B^\ell = q\ell \quad \text{or} \quad V_B^\ell = q\ell - R_A$$

$$R_A + R_B + V_B^r = q\ell \quad \text{or} \quad V_B^r = q\ell - R_A - R_B$$

Likewise, V_C^ℓ and V_C^r can be calculated as

$$V_C^\ell = 2q\ell - R_A - R_B$$

$$V_C^r = 2q\ell - R_A - 2R_B$$

The free-body diagram for the beam with the shear forces is depicted in Fig. 7-13*c*.

Step 1—Formulate the Equilibrium Equations
The transverse EE along the y-direction yields

$$-(2R_A + 2R_B = 3q\ell) \tag{7-72}$$

The reader can verify that the moment equilibrium is automatically satisfied.

In matrix notation, the EE can be written as

$$-[-1 \;\; -1]\begin{Bmatrix} R_A \\ R_B \end{Bmatrix} = -\left\{-\frac{3q\ell}{2}\right\} \tag{7-73a}$$

The single EE is expressed in terms of two unknowns (R_A, R_B). Thus, one CC is required to solve the problem.

Step 2—Derive the Deformation Displacement Relations
The DDR ($\{\beta\} = [B]^T\{X\}$) for the problem has the following form:

$$\begin{aligned} \beta_1 &= X \\ \beta_2 &= X \end{aligned} \tag{7-73b}$$

Here, β_1 and β_2 are the deformations associated with reactions R_A and R_B, respectively. The dual variable of the EE is the displacement X.

Step 3—Generate the Compatibility Condition
The single CC is obtained by eliminating the displacement X from the two DDR as

$$\beta_1 - \beta_2 = 0$$

or in matrix notation,

$$[1 \quad -1]\begin{Bmatrix} \beta_1 \\ \beta_2 \end{Bmatrix} = \{0\} \tag{7-73c}$$

The correctness of the CC is verified from its null property ($[B][C]^T = [0]$) as

$$-[-1 \quad -1]\begin{bmatrix} 1 \\ -1 \end{bmatrix} = [0]$$

Step 4—Formulate the Force Deformation Relations
For the calculation of the FDR, the free-body diagram shown in Fig. 7-13g is considered. The bending moments required to calculate the deformation are obtained for the three spans separately. For simplicity, local coordinates are used for the FDR calculation, because these are independent of the coordinates.

Span AB: The free-body diagram of the span with moment, shear force, and external loads is shown in Fig. 7-13*g*. The force equilibrium for the span can be verified by summing the forces and moments. One can determine the bending moment ($\mathcal{M}_f$) for the first span *AB* by considering a local coordinate x_f with its origin at *A* and an axis measuring from *A* to *B*, as shown in Fig. 7-13*h*.

$$\mathcal{M}_f = R_A x_f - \frac{q x_f^2}{2} \tag{7-73d}$$

$$\text{Moment at } B: \quad M_B = R_A \ell - \frac{q\ell^2}{2} \tag{7-73e}$$

$$\text{Shear force at } B: \quad V_B^{\ell} = q\ell - R_A$$

$$\frac{\partial \mathcal{M}_f}{\partial R_A} = x_f \quad \text{and} \quad \frac{\partial \mathcal{M}_f}{\partial R_B} = 0 \tag{7-73f}$$

Span BC: For the central span *BC*, the local coordinate system (x_c) is selected with its origin at *B*, as shown in Fig. 7-13*i*.

$$\text{Moment at } C: \quad \text{Because of symmetry,} \quad M_C = M_B = R_A \ell - \frac{q\ell^2}{2}$$

$$\text{Shear force at C:} \quad V_C^{\ell} = 2q\ell - R_A - R_B$$

The moment function for span BC becomes

$$M_c = M_B - (ql - R_A - R_B)x_c - \frac{q x_c^2}{2}$$

$$\text{or} \quad \mathcal{M}_c = R_A(\ell + x_c) + R_B x_c - \frac{q}{2}\left(\ell^2 + x_c^2 + 2\ell x_c\right)$$

$$\frac{\partial \mathcal{M}_c}{\partial R_A} = (\ell + x_c) \quad \text{and} \quad \frac{\partial \mathcal{M}_c}{\partial R_B} = x_c \tag{7-73g}$$

Because of symmetry, span *CD* (which is identical to span *AB*) need not be considered separately.

The deformations β_1 and β_2 can be written as

$$\beta_1 = \frac{1}{EI}\left\{2\int_{\text{Span } AB} \mathcal{M}_f \frac{\partial \mathcal{M}_f}{\partial R_A} dx + \int_{\text{Span } BC} \mathcal{M}_c \frac{\partial \mathcal{M}_c}{\partial R_A} dx\right\} = 2\beta_1^{AB} + \beta_1^{BC}$$

$$\beta_2 = \frac{1}{EI}\left\{2\int \mathcal{M}_f \frac{\partial \mathcal{M}_f}{\partial R_B} dx + \int \mathcal{M}_c \frac{\partial \mathcal{M}_c}{\partial R_B} dx\right\} = 2\beta_2^{AB} + \beta_2^{BC} \tag{7-73h}$$

The contribution to the deformation β_i from span CD is accounted for by doubling the value for span AB because the first and last spans are symmetrical. Upon integration, the contribution from the first span, or the deformation component β_1^{AB}, is obtained as

$$\beta_1^{AB} = \frac{1}{EI}\left(\frac{R_A\ell^3}{3} - \frac{q\ell^4}{8}\right) \tag{7-73i}$$

Likewise, the contribution from the central span, or the deformation component β_1^{BC}, is obtained as

$$\beta_1^{BC} = \left(\frac{1}{EI}\right)\left(\frac{7R_A\ell^3}{3} + \frac{5R_B\ell^3}{6} - \frac{15q\ell^4}{8}\right) \tag{7-73j}$$

Total deformation β_1 is obtained by adding the contributions from the three spans:

$$\beta_1 = \frac{1}{EI}\left(3R_A\ell^3 + \frac{5R_B\ell^3}{6} - \frac{17q\ell^4}{8}\right) \tag{7-73k}$$

Likewise, deformation β_2 can be calculated as

$$\beta_2 = \frac{1}{EI}\left(\frac{5R_A\ell^3}{6} + \frac{R_B\ell^3}{3} - \frac{17q\ell^4}{24}\right) \tag{7-73l}$$

In the calculation of deformation β_2, there is no contribution $\beta_2^{AB} = 0$ from the first (or third) spans because $\partial\mathcal{M}_c/\partial R_B = 0$. In other words, the reaction R_B at support B is not present explicitly in the moment function $\mathcal{M}_f$.

In matrix notation, the deformation force relations can be written as

$$\begin{Bmatrix} \beta_1 \\ \beta_2 \end{Bmatrix} = \frac{\ell^3}{EI}\begin{bmatrix} 3 & \frac{5}{6} \\ \frac{5}{6} & \frac{1}{3} \end{bmatrix}\begin{Bmatrix} R_A \\ R_B \end{Bmatrix} - \frac{q_\ell^4}{EI}\begin{Bmatrix} \frac{17}{8} \\ \frac{17}{24} \end{Bmatrix} \tag{7-74a}$$

Step 5—Express the Compatibility Conditions in Terms of Reactions

In terms of reactions, the CC ($\beta_1 - \beta_2 = 0$) can be written as

$$\begin{bmatrix} \frac{13}{6} & \frac{1}{2} \end{bmatrix}\begin{Bmatrix} R_A \\ R_B \end{Bmatrix} = \begin{Bmatrix} \frac{17q\ell}{12} \end{Bmatrix} \tag{7-74b}$$

Step 6—Couple the Equilibrium Equations and Compatibility Conditions to Obtain the IFM Equations, and Solve for Forces

$$\begin{bmatrix} -1 & -1 \\ \frac{13}{6} & \frac{1}{2} \end{bmatrix}\begin{Bmatrix} R_A \\ R_B \end{Bmatrix} = q\ell\begin{Bmatrix} -\frac{3}{2} \\ \frac{17}{12} \end{Bmatrix} \tag{7-74c}$$

Solution of the IFM equation yields the reactions:

$$\begin{Bmatrix} R_A \\ R_B \end{Bmatrix} = q\ell \begin{Bmatrix} \frac{2}{5} \\ \frac{11}{10} \end{Bmatrix} \tag{7-74d}$$

Other forces and moments can be back-calculated from the reactions as

$$R_C = R_B = \frac{11q\ell}{10}$$
$$R_D = R_A = \frac{2}{5}q\ell$$

The moment in the first span is given by

$$\mathcal{M}_f = \frac{2q\ell x_f}{5} - \frac{qx_f^2}{2}$$

The moment function $\mathcal{M}_f$ can be used for the third span; however, the coordinate (x_f) has to be measured with its origin at D and with its abscissa from D to C. The moment in the central span is

$$\mathcal{M}_c = -\frac{q\ell^2}{10} + \frac{q\ell x_c}{2} - \frac{1}{2}qx_c^2$$

Here x_c is measured from B to C (see Fig. 7-13e).

Step 7—Calculate the Displacement, if Required, by Integrating the Moment Curvature Relations

For span AB,

$$\frac{d^2w_f}{dx^2} = \frac{\mathcal{M}_f}{EI} = \frac{1}{EI}\left(\frac{2}{5}q\ell x_f - q\frac{x_f^2}{2}\right) \tag{7-74e}$$

Upon integration,

$$w_f = \frac{1}{EI}\left(\frac{q\ell}{15}x_f^3 - q\frac{x_f^4}{24}\right) + c_1x_f + c_2 \tag{7-74f}$$

Displacement $w_f = 0$ at $x_f = 0$ and $x_f = \ell$,

or $$c_2 = 0 \quad \text{and} \quad c_1 = -\frac{1}{EI}\frac{q\ell^3}{40}$$

and $$w_f = \frac{1}{EI}\left(\frac{q\ell x_f^3}{15} - \frac{qx_f^4}{24} - \frac{q\ell^3x_f}{40}\right) \tag{7-74g}$$

The displacement function w_f for span AB can be used for the third span CD by measuring x_f from D as mentioned earlier.

For span BC,

$$\frac{d^2 w_c}{dx^2} = \frac{M_c}{EI} = \frac{1}{EI}\left(\frac{-q\ell^2}{10} + \frac{q\ell x_c}{2} - \frac{q x_c^2}{2}\right) \tag{7-75a}$$

Upon integration,

$$w_c = \frac{1}{EI}\left(\frac{-q\ell^2 x_c^2}{20} + \frac{q\ell x_c^3}{12} - \frac{q x_c^4}{24}\right) + c_1 x_c + c_2 \tag{7-75b}$$

The displacement $w = 0$ at $x_c = 0$ and $x_c = \ell$ yields the integration constants as

$$c_2 = 0 \quad \text{and} \quad c_1 = \frac{q\ell^3}{120EI} \tag{7-75c}$$

The displacement function for the central span has the following form:

$$w_c = \frac{1}{EI}\left(\frac{-q\ell^2 x_c^2}{20} + \frac{q\ell x_c^3}{12} - \frac{q x_c^4}{24} + \frac{q\ell^3 x_c}{120}\right) \tag{7-75d}$$

7.10 Stiffness Method Solution to Example 7-5

Stiffness method analysis of the continuous beam requires an extension of the basic equation (Eq. 7-48a), to account for uniformly distributed load of intensity (p). Since this is a general formulation, the direction of load (p) is considered along the positive y-coordinate axis. For solution of the continuous beam the load has to be adjusted ($q = -p$). The stiffness equation is formulated considering a two-node beam member of span ($2a$) with the centroid as the origin as shown in Fig. 7-14. It is next specialized to solve Example 7-4.

The beam solution is obtained by combining two solutions: the homogeneous solution (v^h) given by Eq. (7-47a) and the particular integral (v^p), which is the first term in Eq. (7-69e).

$$v(x) = v_h + v_p \tag{7-76a}$$

The homogeneous solution and the particular integrals are defined as

$$v_h = f_1(x)c_1 + f_2(x)c_2 + f_3(x)c_3 + f_4(x)c_4 \tag{7-76b}$$

$$v_p = \frac{pa^4}{24EI}\left(\frac{x}{a}\right)^4 \tag{7-76c}$$

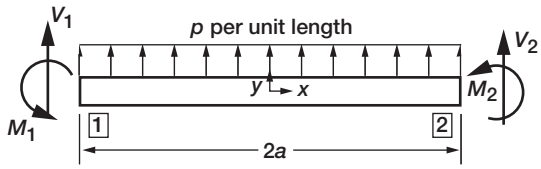

FIGURE 7-14 *Stiffness method sign convention.*

The homogeneous solution is defined in terms of four constants (c_1 to c_4) and four cubic functions (f_1, f_2, f_3, f_4), which are referred to as the beam functions. Observe that the homogeneous displacement function defined in Eq. (7-76*b*) and Eqs. (7-77*a* to *d*) is identical to that in Eq. (7-47*a*)

$$f_1(x) = \frac{1}{4}\left\{2 - 3\left(\frac{x}{a}\right) + \left(\frac{x}{a}\right)^3\right\} \tag{7-77a}$$

$$f_2(x) = \frac{a}{4}\left\{1 - \left(\frac{x}{a}\right) - \left(\frac{x}{a}\right)^2 + \left(\frac{x}{a}\right)^3\right\} \tag{7-77b}$$

$$f_3(x) = \frac{1}{4}\left\{2 + 3\left(\frac{x}{a}\right) - \left(\frac{x}{a}\right)^3\right\} \tag{7-77c}$$

$$f_4(x) = \frac{a}{4}\left\{-1 - \left(\frac{x}{a}\right) + \left(\frac{x}{a}\right)^2 + \left(\frac{x}{a}\right)^3\right\} \tag{7-77d}$$

The values of the beam functions along with their first four derivatives are listed in Table 7-1. The functions and their first derivatives (or slope) are either unity or zero at the nodes (1 and 2). The second and third derivatives, which are related to bending moment and shear force, respectively, are nonzero at both nodes. The fourth derivative, which corresponds to the distributed load, is zero because such functions represent the homogeneous part of the total solution.

The four constants in the displacement function are determined from the four boundary conditions.

$$v = v_1 \quad \text{at} \quad x = -a \text{ yields } c_1 + \frac{pa^4}{24EI} = v_1 \quad \text{or } {}_1 = v_1 - \frac{pa^4}{24EI}$$

$$\theta_1 = \frac{dv}{dx} \quad \text{at} \quad x = -a \text{ yields } c_2 + \frac{pa^3}{6EI} = \theta_1 \quad \text{or} \quad c_2 = \theta_1 + \frac{pa^3}{6EI}$$

$$v = v_2 \quad \text{at} \quad x = a \quad \text{yields } c_3 = v_2 + \frac{pa^4}{24EI}$$

$$\theta_2 = \frac{dv}{dx} \quad \text{at} \quad x = a \text{ yields } c_4 = \theta_2 + \frac{pa^3}{6EI} \tag{7-78}$$

TABLE 7-1 Values of Beam Functions and Its Derivatives at Nodes

Number	Function		First Derivative		Second Derivative		Third Derivative		Fourth Derivative	
	$f(-a)$	$f(a)$	$f^{I}(-a)$	$f^{I}(a)$	$f^{II}(-a)$	$f^{II}(a)$	$f^{III}(-a)$	$f^{III}(a)$	$f^{IV}(-a)$	$f^{IV}(a)$
1	1	0	0	0	$-3/2a^2$	$3/2a^2$	$3/2a^3$	$3/2a^3$	0	0
2	0	0	1	0	$-2/a$	$1/a$	$3/2a^2$	$3/2a^2$	0	0
3	0	1	0	0	$-3/2a^2$	$3/2a^2$	$-3/2a^3$	$3/2a^3$	0	0
4	0	0	0	1	$-1/a$	$2/a$	$3/2a^2$	$3/2a^2$	0	0

The final displacement function has the following form:

$$v(x) = f_1(x)\left(v_1 - \frac{pa^4}{24EI}\right) + f_2(x)\left(\theta_1 + \frac{pa^3}{6EI}\right) + f_3(x)\left(v_2 - \frac{pa^4}{24EI}\right)$$
$$+ f_4(x)\left(\theta_2 + \frac{pa^3}{6EI}\right) + \frac{pa^4}{24EI}\left(\frac{x}{a}\right)^4 \tag{7-79}$$

Substitution of the displacement function into Eq. (7-46) yields the following stiffness equations:

$$\begin{Bmatrix} V_1 \\ M_1 \\ V_2 \\ M_2 \end{Bmatrix} = \frac{EI}{(2a)^3}\begin{bmatrix} 12 & 12a & -12 & 12a \\ 12a & 16a^2 & -12a & 8a^2 \\ -12 & -12a & 12 & -12a \\ 12a & 8a^2 & -12a & 16a^2 \end{bmatrix}\begin{Bmatrix} v_1 \\ \theta_1 \\ v_2 \\ \theta_2 \end{Bmatrix} - M_T\begin{Bmatrix} 0 \\ 1 \\ 0 \\ -1 \end{Bmatrix} - (p = -q)\begin{Bmatrix} a \\ \frac{a^2}{3} \\ a \\ -\frac{a^2}{3} \end{Bmatrix} \tag{7-80}$$

At this time, we are in a position to generate the stiffness solution to the three-span beam problem. The three-span continuous beam has a total of $(12 = 3 \times 4)$ displacement unknowns, as marked in Fig. 7-15. The 12 nodal displacements consisting of transverse displacement (v) and rotation (θ) are represented by the vector $\{X\}$ as:

$$\text{Member 1:} \quad X_1 = v_1 \quad X_2 = \theta_1 \quad X_3 = v_2 \quad X_4 = \theta_2$$
$$\text{Member 2:} \quad X_5 = v_3 \quad X_6 = \theta_3 \quad X_7 = v_4 \quad X_8 = \theta_4$$
$$\text{Member 3:} \quad X_9 = v_5 \quad X_{10} = \theta_5 \quad X_{11} = v_6 \quad X_{12} = \theta_6$$

The 12 displacement unknowns $\{X\}$ of the problem are determined from the 12 boundary conditions.

1. BC–1: $v_1 = 0$ (at node 1 for span AB)
2. BC–2: $M_1 = 0$ (at node 1 for span AB)

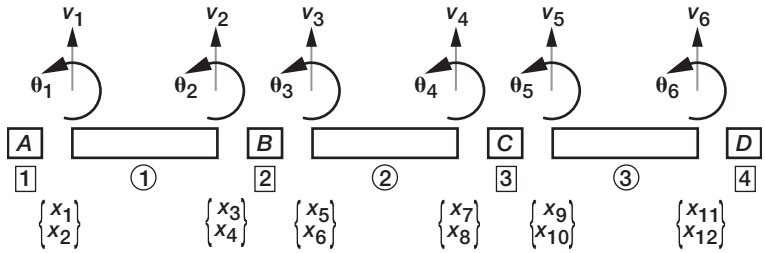

FIGURE 7-15 *Model for stiffness method.*

3. BC–3: $v_2 = 0$ (at node 2 for span AB)
4. BC–4: $M_2 + M_3 = 0$ (rotational EE at node 2)
5. BC–5: $\theta_2 = \theta_3$ (slope continuity at node 2)
6. BC–6: $v_3 = 0$ (at node 3)
7. BC–7: $v_4 = 0$ (at node 4)
8. BC–8: $M_4 + M_5 = 0$ (rotational EE at node 3)
9. BC–9: $\theta_4 = \theta_5$ (slope continuity at node 3)
10. BC–10: $v_5 = 0$ (at node 3)
11. BC–11: $v_6 = 0$ (at node 4)
12. BC–12: $M_6 = 0$ (at node 4)

The following conditions of symmetry are used to solve the problem:

1. The slopes at A and D are equal in magnitude but opposite in sign:

$$X_2 = -X_{12}$$

2. The slopes at B and C are also equal in magnitude but opposite in sign:

$$X_6 = -X_8$$

The imposition of the boundary conditions and the symmetry conditions reduces the number of unknowns from 12 to 2. There are six homogeneous conditions:

$$X_1 = X_3 = X_5 = X_7 = X_9 = X_{11} = 0$$

and four sets of equality conditions:

$$X_4 = X_6; \quad X_8 = X_{10}; \quad X_2 = -X_{12}; \quad X_6 = -X_8$$

The determination of the two unknowns (X_2 and X_4) essentially solves the problem. Because the beam is symmetrical with respect to the center of span BC, the boundary conditions used to determine the two constraints must be confined to either half of the beam.

There are two acceptable set of conditions:

$$\text{Either} \quad BC{-}2 \text{ and } BC{-}4$$

$$\text{or} \quad BC{-}8 \text{ and } BC{-}12$$

The inadmissible set of conditions:

$$BC{-}2 \text{ and } BC{-}12$$

$$\text{or} \quad BC{-}4 \text{ and } BC{-}8$$

The problem is solved using *BC*–2 and *BC*–4.
BC–2 yields

$$2X_2 + X_4 = (pa^3/3EI) \tag{7-81a}$$

BC–4 yields

$$X_2 + 3X_4 = 0 \tag{7-81b}$$

The boundary conditions are coupled to obtain the stiffness equation

$$\begin{bmatrix} 2 & 1 \\ 1 & 3 \end{bmatrix} \begin{Bmatrix} X_2 \\ X_4 \end{Bmatrix} = \begin{Bmatrix} \frac{pa^3}{3EI} \\ 0 \end{Bmatrix}$$

Solution of the two *BC*s yields

$$X_2 = \frac{pa^3}{5EI} = \frac{-q\ell^3}{40EI} \tag{7-81c}$$

$$X_4 = \frac{pa^3}{-15EI} = \frac{q\ell^3}{120EI} \tag{7-81d}$$

The displacement function for span *AB* with the origin at the midspan is obtained from Eqs. (7-80) and (7-81) with the following values of the four constants:

$$v_1 = X_1 = 0$$

$$v_2 = X_3 = 0$$

$$\theta_1 = X_2 = \frac{pa^3}{5EI}$$

$$\theta_2 = X_4 = -\frac{pa^3}{15EI} \tag{7-82a}$$

The values of the constants for the displacement function for span BC are

$$v_1 = X_5 = 0$$

$$v_2 = X_7 = 0$$

$$\theta_1 = X_6 = X_4 = -\frac{pa^3}{15EI}$$

$$\theta_2 = X_8 = -X_4 = \frac{pa^3}{15EI} \tag{7-82b}$$

Likewise, the values of the constants for span CD are

$$v_1 = X_9 = 0$$

$$v_2 = X_{11} = 0$$

$$\theta_1 = X_{10} = -X_4 = \frac{pa^3}{15EI}$$

$$\theta_2 = X_{12} = -X_2 = -\frac{pa^3}{5EI} \tag{7-82c}$$

All other variables of the problem are obtained by back-substitution. For span AB,

$$V_1 = (EI/8a^3)(12a)(X_2 + X_4) - pa = -(4/5)pa = -(2p\ell/5)$$
$$M_1 = 0$$
$$V_2 = -(6/5)pa = -(3p\ell/5)$$
$$M_2 = 2pa^2/5 = p\ell^2/10$$

For span BC,

$$V_1 = -pa = -p\ell/2$$
$$M_1 = -2pa^2/5 = -p\ell^2/10$$
$$V_2 = -pa = -p\ell/2$$
$$M_2 = -2pa^2/5 = -p\ell^2/10$$

For span CD,

$$V_1 = -(6/5)pa = -(3p\ell/5)$$
$$M_1 = 2pa^2/5 = p\ell^2/10$$
$$V_2 = -(4/5)pa = -(2p\ell/5)$$
$$M_1 = 0$$

The reactions at the supports are

$$R_1 = V_1^{AB} = -2p\ell/5 \text{ (at support } A)$$
$$R_2 = V_2^{AB} + V_1^{BC} = -11p\ell/10$$
$$R_3 = V_2^{BC} + V_1^{CD} = -11p\ell/10$$
$$R_4 = -2p\ell/5 \text{ (at support } C)$$

The reactions satisfy the transverse EE because $R_1 + R_2 + R_3 + R_4 = -3p\ell = 3q\ell$.

Problems

Use the properties of material given in Tables A5-1 and A5-2 to solve of the problems.

7-1 Model the eight beams shown in Fig. P7-1*a* to *h* for analysis by force and displacement methods. For each model, specify the number of internal force or moment, displacement or rotation, deformation variables, the reactions, the number of equilibrium equations and compatibility conditions, as well as the degree of internal and external indeterminacy.

The beam (a) has a span (ℓ) and uniform rigidity (EI). It is subjected to a load (P) and a moment (M) at the midspan location.

The beam (b) has a span (3ℓ) and it is subjected to a load (P) and a moment (M) at the midspan location. The rigidity is ($2EI$) for the center one-third span and it is (EI) elsewhere.

The beam (c) has two unequal spans (ℓ_1 and ℓ_2), but uniform rigidity (EI). It is subjected to a uniformly distributed load (q per unit length). The middle support settles by (Δ) in.

The beam (d) has a span $6a$ and a midspan support. The rigidities are ($2EI$ and EI) and it is subjected to uniform load (q per unit length) and concentrated load (P) as shown.

The uniform beam (e) with rigidity (EI) and span ($\ell_1 + \ell_2$) has a middle support. It is subjected to transverse loads (P and $2P$) at the center of the two spans. The top and bottom fibers of the second span are subjected to change of temperature ($T^t = -100°$F and $T^b = 100°$ F), respectively.

The beam (f) with uniform moment of inertia (I) and span (2ℓ) is subjected to a transverse load (P). The first half the beam is made of steel and the second half is made of aluminum.

The beam (g) with a uniform rigidity (EI) has a total span ($a + b + c$). It is made of two cantilevers and suspended center span. Supports at B and C can transfer shear force but not moment. It is subjected to concentrated loads at the middle of the individual spans.

The beam (h) is similar to beam (g), except that the supports at B and C are replaced by hinges with zero moment conditions ($M = 0$).

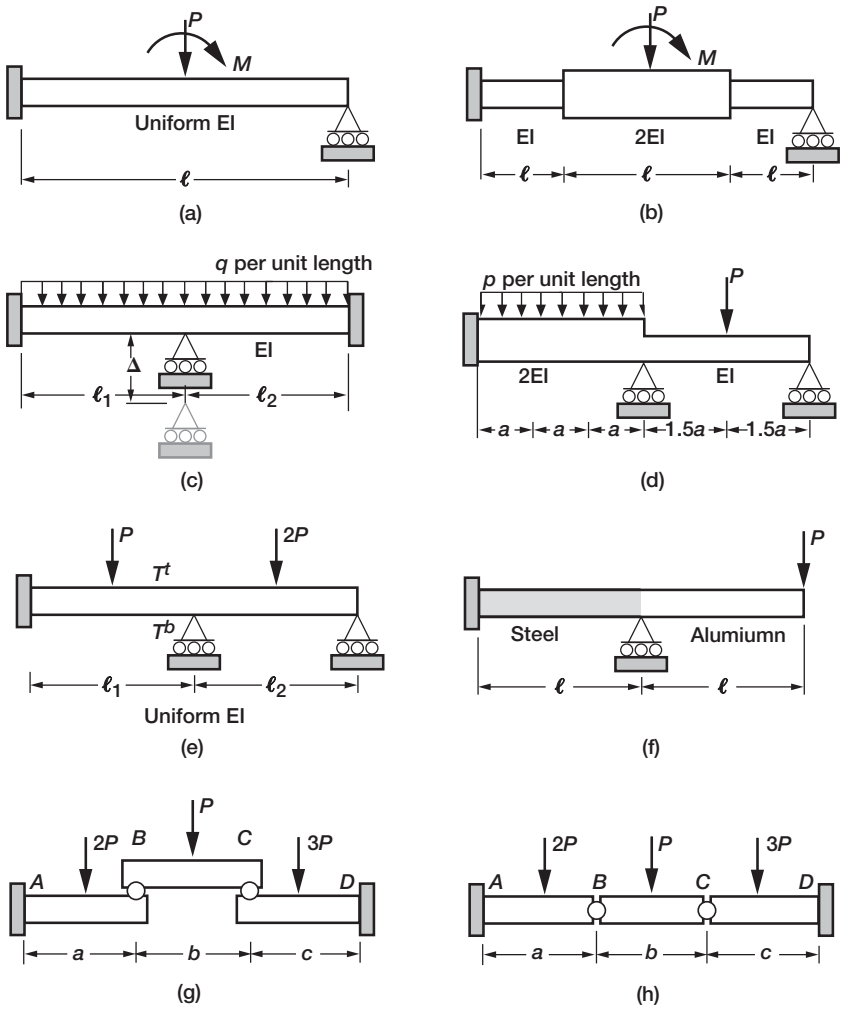

FIGURE P7-1

7-2 Analyze by Integrated Force Method and the Stiffness Method the two-span beam shown in Fig. P7-2. Each span is 120 in. long. The first span made of steel has a solid rectangular cross-section with depth 8 in. and width 4 in. as shown in the figure. The second span made of aluminum also has a solid rectangular cross-section with depth 12 in. and width 8 in. It is subjected to three load conditions.

1. Moment ($M_0 = 5$ in.-k) applied at node 2.
2. A change of temperature in the second span as shown in the figure.
3. Settling of support of node 3 by 0.5 in.
4. Combined action of load conditions (1 and 2).

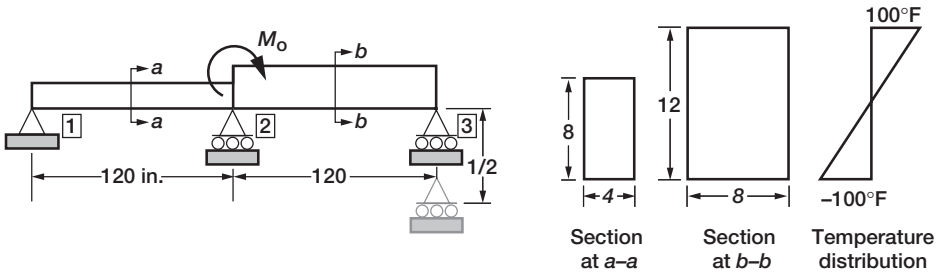

FIGURE P7-2

7-3 Formulate Problem 7-2 in SI units. Verify solution by back-substituting answers obtained for Problem 7-2. Use meter, Newton, Pascal, and degree Celsius to measure length, force, stress, and temperature, respectively.

7-4 A hinge as shown in Fig. P7-4 connects two uniform cantilever beams with rigidity (EI). A hinge can transverse shear force but not bending moment, which is zero. The boundary condition at its hinge is ($M = 0$). Analyze the beam by force and displacement method for a mechanical load applied at the quarter-span location.

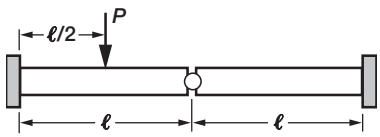

FIGURE P7-4

7-5 A propped cantilever beam of uniform rigidity (EI) is subjected to a triangular load (with a maximum and minimum values of q_0 and 0) in the second half of its span, as shown in Fig. P7-5. Calculate the displacement function for the beam. Show displacement and slope continuity at midspan location (X) by calculating the variables at the left and right of the point.

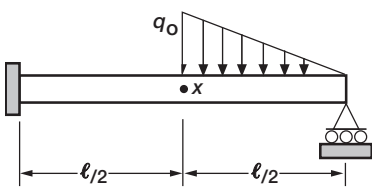

FIGURE P7-5

7-6 Calculate the reactions at the support for the propped cantilevered beam with uniform (EI) as shown in Fig. P7-6. It is subjected to the following two load cases:

Case 1: Mechanical load of magnitude (100 and 50 kN) at locations B and D, respectively.
Case 2: Support A rotates by ($\bar{\theta} = 0.175$ rad).

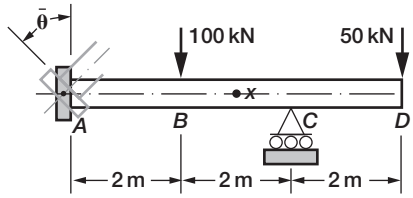

FIGURE P7-6

7-7 Calculate the reactions at the supports for the clamped beam with uniform (*EI*) as shown in Fig. P7-7 for the following types of settling of supports.

(a) The right support settles by Δ amount.
(b) The left support rotates by θ radian.
(c) Simultaneously settling by (Δ and θ).

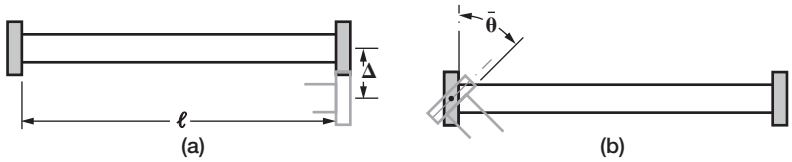

FIGURE P7-7

7-8 A clamped beam with uniform (*EI*) is subjected two bending moments of magnitude (M_0) as in Fig. P7-8. Calculate the reactions at the support.

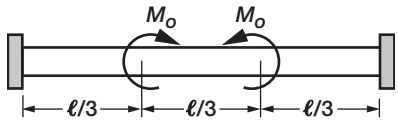

FIGURE P7-8

7-9 Two cantilevered beams of uniform rigidity (*EI*) and lengths (2a and a) are clamped at A and B as shown in Fig. P7-9. In addition a roller snugly fits the two beams at location C. It is subjected to a load *P*. Calculate the reactions at the supports.

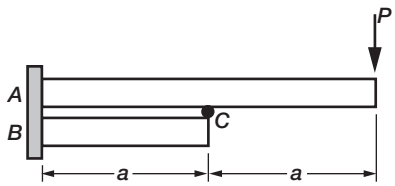

FIGURE P7-9

7-10 A nonuniform beam with rigidities (EI and $2EI$) is subjected to a uniformly distributed load of intensity p per unit length as shown in Fig. P7-10. Solve the problem for forces and displacements using both IFM and stiffness methods.

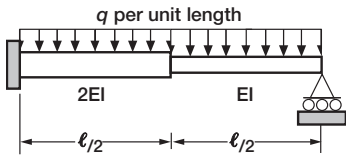

FIGURE P7-10

8 Indeterminate Shaft

An indeterminate shaft is obtained when additional support conditions are added to a determinate shaft. An indeterminate shaft can transfer load to the support more efficiently than a determinate shaft. The support reactions, however, become dependent on the material and design parameters of the shaft. The indeterminate nature of the reactions must be accounted for during its design. This burden may refrain an engineer from using an indeterminate shaft. The stress and deformation in an indeterminate shaft are primarily due to the applied torque load and the settling of support. Temperature does not change the response because no shear strain is induced in a shaft made of an isotropic material. The determination of the internal torque (T) in an indeterminate shaft requires compatibility conditions in addition to the equilibrium equations. Other response variables such as the shear stress (τ) and the angle of twist (φ) can be back-calculated from torque (T) using the formulas that have been developed for determinate shaft. Analysis of an indeterminate shaft is formulated by specializing following four sets of equations.

1. Equilibrium equations (EE)
2. Deformation displacement relations (DDR)
3. Force deformation relations (FDR)
4. Compatibility conditions (CC)

Analysis is straightforward because each shaft member has only one internal torque variable. It is illustrated by considering an indeterminate shaft shown in Fig. 8-1*a*. It has two segments with length, radius, polar moment of inertia, and shear modulus: (ℓ_1, r_1, J_1, G_1) and (ℓ_2, r_2, J_2, G_2), respectively. It's subjected to a torque load (T^{ℓ}) and its twist-angles are suppressed at the boundary nodes (1 and 3). The analysis model is depicted in Fig. 8-1*b*. Its response variables are: two internal torques (T_1 and T_2), two reactions (R_1 and R_3), and the

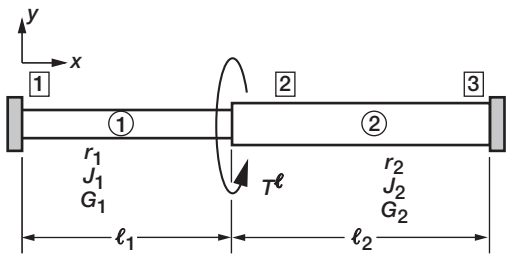

(a) An Indeterminate shaft.

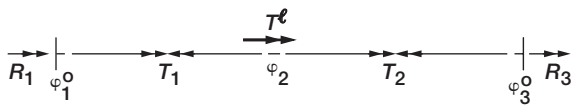

(b) Analysis model.

FIGURE 8-1 *Two-span shaft.*

angle of twist (φ_2) at node 2. The boundary nodes 1 and 3 can settle with the angle of twist values, ($\varphi_1 = \varphi_1^0$ and $\varphi_3 = \varphi_3^0$). The objective of the analysis is to calculate (T_1, T_2, R_1, R_3, φ_2). Shear stress and strain can be back-calculated using the formulas that have been developed for determinate shaft. The four sets of equations are specialized for a shaft first. Then the problem is solved next using the Integrated Force method and the Stiffness Method.

8.1 Equilibrium Equations

The shaft has one independent equilibrium equation, Eq. (8-1*a*), at node 2 and it is associated with the angle of twist (φ_2), which is the dual variable of the EE. Equilibrium equations Eq. (8-1*b*, *c*), at the support nodes 1 and 3 can be used later to back-calculate the reactions (R_1 and R_3). The three EE are as follows:

$$-T_1 + T_2 + T^\ell = 0 \tag{8-1a}$$

$$T_1 + R_1 = 0 \tag{8-1b}$$

$$-T_2 + R_3 = 0 \tag{8-1c}$$

$$([B]\{F\} = \{P\}) \Rightarrow [\,1 \quad -1\,]\begin{Bmatrix} T_1 \\ T_2 \end{Bmatrix} = \{T^\ell\} \tag{8-1d}$$

The EE ($[B]\{F\} = \{P\}$) given by Eq. (8-1d) is indeterminate because the two internal torques (T_1 and T_2) cannot be determined from a single equation. The number of force variables is two ($n = 2$) and the number of displacement variables, which is equal to the number of independent EE, is one ($m = 1$). The shaft is one-degree indeterminate ($r = n - m = 1$). The EE at the boundary given by Eq. (8-1e) will be used later to back-calculate the reactions from internal torque.

$$\left([B]_R\{F\} = \{R\}\right) \Rightarrow \begin{bmatrix} -1 & 0 \\ 0 & 1 \end{bmatrix} \begin{Bmatrix} T_1 \\ T_2 \end{Bmatrix} = \begin{Bmatrix} R_1 \\ R_3 \end{Bmatrix} \tag{8-1e}$$

For shaft the EE matrix for the calculation of reactions is an uncoupled matrix.

8.2 Deformation Displacement Relations

The DDR are defined through the EE matrix $[B]$ as ($\{\beta\} = [B]^T\{X\}$). For the shaft the single displacement variable is: $\{X\} = \{\varphi_2\}$, being the angle of twist at node 2. It is also the dual variable of the EE. The deformations (β_1, β_2), or ($\{\beta\}^T = \{\beta_1, \beta_2\}$), are associated with the torques (T_1, T_2) in segments 1 and 2, respectively. The DDR has the following explicit form.

$$\left(\{\beta\} = [B]^T\{X\}\right) \Rightarrow \begin{Bmatrix} \beta_1 \\ \beta_2 \end{Bmatrix} = \begin{bmatrix} 1 \\ -1 \end{bmatrix} \{\varphi_2\} \tag{8-2}$$

The deformations in the DDR represent the total deformation. Two deformations (β_1, β_2) are expressed in term of a single twist-angle (φ_2).

8.3 Force Deformation Relations

The FDR link the torque and deformation in a shaft. The FDR is easily derived as the derivative of the strain energy (U^s) with respect to the torque (T). The strain energy is expressed in terms of shear stress (τ), strain (γ), volume (v), which is a product of area (A) and length (ℓ), and polar moment of inertia (J).

$$\begin{aligned} U^s &= \int_V \left\{ \int_\gamma (\tau\delta\gamma) \right\} dv = \int_\tau \tau\delta\left(\frac{\tau}{G}\right) A d\ell \\ &= \frac{1}{2}\int_V \frac{\tau^2}{G} A d\ell = \frac{T^2}{2GJ^2}\left(\int_V A r^2 d\ell = J\right) \\ &= \frac{T^2\ell}{2JG} \end{aligned} \tag{8-3a}$$

The derivation of the energy expression assumes a uniform circular shaft and utilized the following formulas that have been developed for determinate analysis.

Torsion formula that relates stress (τ) at a location (r) to torque (T) through the polar moment of inertia (J).

$$\tau = \frac{Tr}{J} \tag{8-3b}$$

Hooke's law relates stress (τ) and strain (γ) through the shear modulus (G) as

$$\tau = Gr \tag{8-3c}$$

$$\beta = \frac{\partial U^s}{\partial T} = \frac{T\ell}{JG} = g_s T \tag{8-3d}$$

$$g_s = \frac{\ell}{JG} \tag{8-3e}$$

The deformation (β) is proportional to torque (T). The proportionality factor is the flexibility coefficient (g_s). The deformation $\{\beta\}$ in the FDR, is equal to the elastic deformation $\{\beta^e\}$ in the absence of temperature, ($\{\beta\} = \{\beta^e\}$).

The shaft shown in Fig. 8-1b has two torques, and the FDR can be written as

$$\beta_1^e = \frac{T_1 \ell_1}{J_1 G_1}$$

$$\beta_2^e = \frac{T_2 \ell_2}{J_2 G_2} \tag{8-4a}$$

The FDR in matrix notation can be written as:

$$\begin{Bmatrix} \beta_1^e \\ \beta_2^e \end{Bmatrix} = \begin{bmatrix} \frac{\ell_1}{J_1 G_1} & 0 \\ 0 & \frac{\ell_2}{J_2 G_2} \end{bmatrix} \begin{Bmatrix} T_1 \\ T_2 \end{Bmatrix} = \begin{bmatrix} g_1 & 0 \\ 0 & g_2 \end{bmatrix} \begin{Bmatrix} T_1 \\ T_2 \end{Bmatrix}$$

$$\text{or} \quad \{\beta\}^e = [G]\{F\} \tag{8-4b}$$

The flexibility matrix $[G]$ is a diagonal matrix with a concatenation of the flexibility coefficients along the diagonal. The reader should interpret the use of symbols in proper context and avoid confusion. For example, $[G]$ is used to represent the flexibility matrix but it is also used as the shear modulus (G_1 and G_2); further more, the lowercase (g) represents the flexibility coefficient.

8.4 Compatibility Conditions

The DDR ($\{\beta\} = [B]^T\{X\}$) relate n deformations $\{\beta\}$ to m displacements $\{X\}$ and ($n > m$) for an indeterminate shaft. The m displacements are eliminated to obtain ($r = n - m$) constraints on deformations, which become the compatibility conditions. For the shaft shown in Fig. 8-1a, the single angle of twist (φ_2) is eliminated in the two DDR given by Eq. (8-2) to obtain ($r = 2 - 1 = 1$) compatibility condition.

$$\beta_1 + \beta_2 = 0 \tag{8-5a}$$

The compatibility condition ($[C]\{\beta\} = \{0\}$) in matrix notation can be written as

$$[C]\{\beta\} = 0 \Rightarrow [\,1 \quad 1\,]\begin{Bmatrix} \beta_1 \\ \beta_2 \end{Bmatrix} = \{0\} \tag{8-5b}$$

The deformation in the compatibility condition represents the total deformation. The null property ($[B][C]^T = [0]$) of the compatibility and equilibrium matrices is easily verified.

$$[B][C]^T = [\,1 \quad -1\,]\begin{bmatrix} 1 \\ 1 \end{bmatrix} = [0] \tag{8-5c}$$

The compatibility condition is expressed in terms of elastic deformation using the relationship between total deformation $\{\beta\}$, the elastic deformation $\{\beta\}^e$, and initial deformation $\{\beta\}^e$ as: ($\{\beta\} = \{\beta\}^e + \{\beta\}^0$).

$$[C]\left\{\{\beta\}^e + \{\beta\}^0\right\} = 0$$

$$[C]\{\beta\}^e = \{\delta R\}$$

$$\text{where} \quad \{\delta R\} = -[C]\{\beta\}^0 \tag{8-5d}$$

The initial deformation $\{\beta\}^0$, because of settling of support, is obtained from the DDR written for the support nodes that settle, using the matrix EE ($[B]_R\{F\} = \{R\}$) given by Eq. (8-1e). For the shaft shown in Fig. 8-1a, the initial deformations are calculated using the DDR ($\{\beta\}^0 = -[B]_R{}^T\{X^0\}$). The negative sign accounts for the opposite nature of the reaction and initial displacement.

$$\begin{Bmatrix} \beta_1^0 \\ \beta_2^0 \end{Bmatrix} = -\begin{bmatrix} -1 & 0 \\ 0 & 1 \end{bmatrix}\begin{Bmatrix} \varphi_1^0 \\ \varphi_3^0 \end{Bmatrix} = \begin{Bmatrix} \varphi_1^0 \\ -\varphi_3^0 \end{Bmatrix} \tag{8-5e}$$

The compatibility conditions are expressed in terms of the torques by eliminating the elastic deformations between Eq. (8-5d) and FDR in Eq. (8-4b).

$$[C][G]\{F\} = \{\delta R\} \tag{8-6}$$

The EE given by Eq. (8-1*d*), DDR in Eq. (8-2), FDR in Eq. (8-4*b*), and the CC in Eq. (8-6) are sufficient for the solution of a torsion problem. The integrated force method and the stiffness method for the shaft shown in Fig. 8-1*a* are formulated for the following value of the input data.

Length ($\ell_1 = 100$ in., $\ell_2 = 150$ in.)
Radius ($r_1 = 4$ in., $r_1 = 6$ in.)
Polar moment of inertia ($J_1 = 402$ in.^{4}, $J_2 = 2036$ in.^{4})
Modulus ($G_1 = 10{,}000$ ksi, $G_2 = 30{,}000$ ksi)
Load ($T^\ell = 100.0$ in.-k)
Settling ($\varphi_1^0 = 0.002$ rad, $\varphi_3^0 = 0.004$ rad)

8.5 Integrated Force Method for Shaft

This method considers the internal forces $\{F\}$, which is the torque $\{T\}$, ($\{F\} = \{T\}$), as the primary unknowns. The displacements $\{X\}$ are back-calculated from the forces. Its governing equation ($[S]\{F\} = \{P\}^*$) is obtained by coupling the equilibrium equation ($[B]\{F\} = \{P\}$) to the compatibility condition ($[C][G]\{F\} = \{\delta R\}$) as

$$\left[\frac{[B]}{[C]\,[G]}\right]\{F\} = \left\{\frac{P}{\delta R}\right\} \tag{8-7}$$

The governing equation for the shaft shown in Fig. 8-1*a* is assembled from the matrices that have already been generated.

EE matrix $[B]$: $\quad [B] = [\,1 \quad -1\,]$

CC matrix $[C]$: $\quad [C] = [\,1 \quad 1\,]$

Flexibility matrix

$$[G] = \begin{bmatrix} g_1 & 0 \\ 0 & g_2 \end{bmatrix} = \begin{bmatrix} 64.7 & 0 \\ 0 & 6.4 \end{bmatrix} \times 10^{-6}/\text{in.-k}$$

$$\{\beta\}^0 = \begin{Bmatrix} \varphi_1^0 \\ -\varphi_3^0 \end{Bmatrix} = \begin{Bmatrix} 0.002 \\ -0.004 \end{Bmatrix} \text{ rad.}$$

$$\{\delta R\} = -[C]\{\beta\}^0 = -[\,1 \quad 1\,]\begin{Bmatrix} 0.002 \\ -0.004 \end{Bmatrix} = \{0.002\}$$

$$[C][G] = [\,1 \quad 1\,]\begin{bmatrix} 64.7 & 0 \\ 0 & 6.4 \end{bmatrix} \times 10^{-6} = [\,64.7 \quad 6.4\,] \times 10^{-6} \tag{8-8}$$

The IFM governing matrix for the problem has the following form.

$$\begin{bmatrix} 1 & -1 \\ 64.7 & 6.4 \end{bmatrix} \begin{Bmatrix} T_1 \\ T_2 \end{Bmatrix} = \begin{Bmatrix} 100 \\ 2000 \end{Bmatrix} \tag{8-9a}$$

The CC in Eq. (8-9*a*) is normalized with (10^{-6}). The solution yields the torques.

$$\begin{Bmatrix} T_1 \\ T_2 \end{Bmatrix} = \begin{Bmatrix} 37.1 \\ -62.9 \end{Bmatrix} \text{in.-k} \tag{8-9b}$$

The induced torques given by Eq. (8-9*a*) is due to the combined effect of applied mechanical load and settling of support.

Torque Only Due to Mechanical Load

For this load case the internal torque is obtained by setting the effect of initial deformation vector to zero, ($\{\delta R\} = 0$), in the IFM governing equation:

$$\begin{bmatrix} 1 & -1 \\ 64.7 & 6.4 \end{bmatrix} \begin{Bmatrix} T_1 \\ T_2 \end{Bmatrix}^{m\ell} = \begin{Bmatrix} 100 \\ 0 \end{Bmatrix} \tag{8-10a}$$

Solution to Eq. (8-10*a*) yields the torque.

$$\begin{Bmatrix} T_1 \\ T_2 \end{Bmatrix}^{m\ell} = \begin{Bmatrix} 8.9 \\ -91.1 \end{Bmatrix} \text{in.-k} \tag{8-10b}$$

Torque Only Due to Settling of Support

For this load case, the internal torque is obtained by setting the mechanical load to zero but the load due to settling of support is retained as $\{\delta R\}$.

$$\begin{bmatrix} 1 & -1 \\ 64.7 & 6.4 \end{bmatrix} \begin{Bmatrix} T_1 \\ T_2 \end{Bmatrix}^{s\ell} = \begin{Bmatrix} 0 \\ 2000 \end{Bmatrix} \tag{8-10c}$$

Solution to Eq. (8-10*a*) yields the torque.

$$\begin{Bmatrix} T_1 \\ T_2 \end{Bmatrix}^{s\ell} = \begin{Bmatrix} 28.2 \\ 28.2 \end{Bmatrix} \text{in.-k} \tag{8-10d}$$

Torque solution for the combined load given by Eq. (8-9*b*) can be obtained by adding the individual responses given by Eq. (8-10*b*) for mechanical load and by Eq. (8-10*d*) for support settling. The settling of support node 1 by 0.002 rad and node 3 by 0.004 rad is equal to a relative settlement of 0.002 rad, and this induces internal torque. The torque induced at 28.1 in.-k is indeed enormous even for a modest settling of 0.002 rad, or 0.1 degree. This is one reason against the use of indeterminate shaft in rotating machinery.

Reactions are back-calculated from the EE written at the support nodes or using Eq. (8-1*e*). Mechanical load:

$$\begin{Bmatrix} R_1 \\ R_3 \end{Bmatrix}^{m\ell} = \begin{bmatrix} -1 & 0 \\ 0 & 1 \end{bmatrix} \begin{Bmatrix} 8.9 \\ -91.1 \end{Bmatrix}^{m\ell} = \begin{Bmatrix} -8.9 \\ -91.1 \end{Bmatrix} \text{in.-k} \tag{8-10e}$$

Settling load:

$$\begin{Bmatrix} R_1 \\ R_3 \end{Bmatrix}^{s\ell} = \begin{bmatrix} -1 & 0 \\ 0 & 1 \end{bmatrix} \begin{Bmatrix} 28.2 \\ 28.2 \end{Bmatrix} = \begin{Bmatrix} -28.2 \\ 28.2 \end{Bmatrix} \text{in.-k} \tag{8-10f}$$

Combined load:

$$\begin{Bmatrix} R_1 \\ R_3 \end{Bmatrix}^{c\ell} = \begin{bmatrix} -1 & 0 \\ 0 & 1 \end{bmatrix} \begin{Bmatrix} 37.1 \\ -62.9 \end{Bmatrix} = \begin{Bmatrix} -37.1 \\ -62.9 \end{Bmatrix} \text{in.-k} \tag{8-10g}$$

The reactions due to the mechanical load and settling of support add up to their combined effect as given by Eq. (8-10*e*), Eq. (8-10*f*), and Eq. (8-10*g*), respectively.

The torsion formula given by Eq. (8-3*b*) can be used to calculate shear stress. Shear strain can be calculated from Hooke's law, which is given by Eq. (8-3*c*). These calculations, which are illustrated in Chapter 4, are not repeated.

Angle of Twist

It is calculated from the deformation displacement relations ($\{\beta\} = [B]^T\{X\}$), given by Eq. (8-2). The total deformation in the DDR is obtained as the sum of the elastic and initial deformation.

$$\{\beta\} = \{\beta\}^e + \{\beta\}^0$$

$$\{\beta\}^e = \begin{Bmatrix} \frac{\ell_1 T_1}{J_1 G_1} \\ \frac{\ell_2 T_2}{J_2 G_2} \end{Bmatrix} = \begin{Bmatrix} 2.4 \\ -0.4 \end{Bmatrix} \times 10^{-3}$$

$$\{\beta\} = \begin{Bmatrix} 4.4 \\ -4.4 \end{Bmatrix} \times 10^{-3} \tag{8-11a}$$

Either equation in the DDR can be used to calculate the angle of twist (φ_2) as

$$\varphi_2 = \beta_1 = 4.4 \times 10^{-3} \text{ rad}$$

$$\varphi_2 = -\beta_2 = 4.4 \times 10^{-3} \text{ rad} \tag{8-11b}$$

The angle of twist at the three nodes is obtained as the superposition of the initial deformations (φ_1^0 and φ_3^0) to (φ_2) as:

$$\begin{Bmatrix} \varphi_1 \\ \varphi_2 \\ \varphi_3 \end{Bmatrix} = \begin{Bmatrix} \varphi_1^0 \\ \varphi_2 \\ \varphi_3^0 \end{Bmatrix} = \begin{Bmatrix} 2 \\ 4.4 \\ 4 \end{Bmatrix} \times 10^{-3}\ \text{rad} \tag{8-11c}$$

The deformation only for the mechanical load is calculated as:

$$\{\beta\}^{m\ell} = \begin{Bmatrix} \frac{\ell_1 T_1}{J_1 G_1} \\ \frac{\ell_2 T_2}{J_2 G_2} \end{Bmatrix}^{m\ell} = \begin{Bmatrix} 0.58 \\ -0.58 \end{Bmatrix} \times 10^{-3}\ \text{rad} \tag{8-11d}$$

For mechanical load, the angle of twist at the three nodes is obtained as:

$$\begin{Bmatrix} \varphi_1 \\ \varphi_2 \\ \varphi_3 \end{Bmatrix}^{m\ell} = \begin{Bmatrix} 0 \\ 0.58 \\ 0 \end{Bmatrix} \times 10^{-3}\ \text{rad} \tag{8-11e}$$

Likewise the deformation only for the settling of support is calculated as:

$$\{\beta\}^{s\ell} = \left\{\frac{\ell T}{JG}\right\} + \{\beta\}^0 = \{3.8\} \times 10^{-3} \tag{8-11f}$$

For settling of support, the angle of twist at the three nodes is obtained as:

$$\begin{Bmatrix} \varphi_1 \\ \varphi_2 \\ \varphi_3 \end{Bmatrix} = \begin{Bmatrix} 2 \\ 3.8 \\ 4 \end{Bmatrix} \times 10^{-3}\ \text{rad} \tag{8-11g}$$

The angles of twist for the combined load given by Eq. (8-11*a*) is equal to the sum of the components given by Eq. (8-11*e*) and Eq. (8-11*g*).

8.6 Stiffness Method Analysis for Shaft

The stiffness method is obtained when the equilibrium equations are expressed in terms of the angle of twist variables. The method is formulated in the following steps, considering the shaft shown in Fig. 8-1 as an example.

The EE are: $[B]\{F\} = \{P\}$

The deformation displacement relation can be written as:

$$\{\beta\} = \{\beta\}^0 + \{\beta\}^e = [B]^T\{X\}$$

The flexibility relation can be written as:

$$\{\beta\}^e = [G]\{F\}$$

Elimination of force $\{F\}$ in favor of displacement between the EE, DDR and the flexibility relation yields the governing equation of the stiffness method.

$$[B][G]^{-1}[B]^T\{X\} = \{P\} + [B][G]^{-1}\{\beta\}^0$$

The stiffness equation can be abridged by defining the stiffness matrix ($[K] = [B][G]^{-1}[B]^T$) and initial load ($\{P\}^0 = [B][G]^{-1}\{\beta\}^0$) to obtain:

$$[K]\{X\} = \{P\} + \{P\}^0 \tag{8-12a}$$

The stiffness matrix $[K]$ is symmetrical and has a dimension ($m \times m$). The displacement and load are (m) component vectors. Solution to the stiffness equation yields the displacement. Forces are back-calculated from displacement as:

$$\{F\} = [G]^{-1}\{\beta\}^e = [G]^{-1}\{\{\beta\} - \{\beta\}^0\} = [G]^{-1}\{[B]^T\{X\} - \{\beta\}^0\} \tag{8-12b}$$

The stiffness method is illustrated for the shaft in Fig. 8-1a. The solution utilizes the expressions derived for IFM solution. The stiffness matrix ($[K] = [B][G]^{-1}[B]^T$) is obtained as:

$$[K] = [1 \quad -1]\begin{bmatrix} 1.55 & 0 \\ 0 & 15.6 \end{bmatrix} \times 10^4 \begin{bmatrix} 1 \\ -1 \end{bmatrix}$$

$$[K] = [17.17] \times 10^4 \tag{8-13a}$$

The dimension of matrix $[K]$ is a (1×1) because the angle of twist (φ_2) is the only displacement unknown. The effective load is obtained by adding the contributions due to the applied load and support-settling load ($\{P\}^0 = [B][G]^{-1}\{\beta\}^0$) = as

$$\{P\}^0 = [1 \quad -1]\begin{bmatrix} 15.5 \times 10^3 & 0 \\ 0 & 156 \times 10^3 \end{bmatrix}\begin{Bmatrix} 0.002 \\ -0.004 \end{Bmatrix} = \{656\}$$

$$\{\bar{P}\} = \{P\} + \{P\}^0 = \{100 + 656\} = \{756\} \tag{8-13b}$$

The stiffness equation is solved to obtain the angle of twist (φ_2).

$$\left[17.17 \times 10^4\right]\{\varphi_2\} = \{756\}$$

$$\varphi_2 = 4.4 \times 10^{-3}\ \text{rad}$$

The angle of twist at all three nodes is obtained by adding the settling angles to (φ_2) as:

$$\{\varphi\} = \begin{Bmatrix} \varphi_1^0 \\ \varphi_2 \\ \varphi_3^0 \end{Bmatrix} = \begin{Bmatrix} 2 \\ 4.4 \\ 4 \end{Bmatrix} \times 10^{-3}\,\text{rad} \tag{8-13c}$$

The elastic deformation is obtained as the difference of the total deformation and initial deformation as:

$$\{\beta\}^e = \{\beta\} - \{\beta\}^0 = \begin{bmatrix} 1 \\ -1 \end{bmatrix} 4.4 \times 10^{-3} - \begin{Bmatrix} 2 \\ -4 \end{Bmatrix} \times 10^{-3} = \begin{Bmatrix} 2.4 \\ 0.4 \end{Bmatrix} \times 10^{-3} \tag{8-13d}$$

The internal torque is obtained as the product of the inverse of the flexibility matrix and the elastic deformation.

$$\{F\} = \begin{Bmatrix} T_1 \\ T_2 \end{Bmatrix} = [G]^{-1}\{\beta\}^e = \begin{bmatrix} 1.55 & 0 \\ 0 & 15.6 \end{bmatrix} \times 10^4 \begin{Bmatrix} 2.4 \\ 0.4 \end{Bmatrix} \times 10^{-3} = \begin{Bmatrix} 37.1 \\ -62.9 \end{Bmatrix} \text{in.-k} \tag{8-13e}$$

The stiffness solution for torque given by Eq. (8-13*e*) is identical to the same by IFM, given by Eq. (8-9*b*). Likewise the angle of twist match: Eq. (8-11*c*) for IFM and Eq. (8-13*c*) for the stiffness method. Reactions are back-calculated using Eq. (8-1*e*). It is the same for both the IFM and stiffness method and given by Eq. (8-9*g*).

Solution to indeterminate torsion problems using IFM can be obtained in the following steps:

Step 0—Solution Strategy.
Step 1—Formulate the Equilibrium Equations.
Step 2—Derive the Deformation Displacement Relations.
Step 3—Generate the Compatibility Conditions.
Step 4—Formulate the Force Deformation Relations.
Step 5—Express the Compatibility Conditions in Terms of Forces.
Step 6—Form IFM Equations and Solve for Forces.
Step 7—Back-Calculate the Displacements and Other Response Variables, as Required.

In the stiffness method the governing matrix to calculate angle of twist is formed. Solution of the stiffness equation yields the angle of twist and forces are back-calculated. Both methods are illustrated in a few examples.

EXAMPLE 8-1

A solid circular steel shaft of diameter 8 in. and length 200 in. is subjected to a 100 in.-k torque load at the quarter-span location as shown in Fig. 8-2*a*. It is fully restrained at both ends but the right support settles by 0.005 rad. Analyze the shaft for internal torque and angle of twist using IFM and the stiffness method.

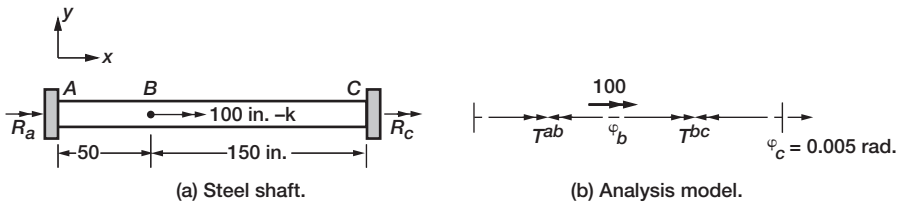

FIGURE 8-2 *Solid steel shaft.*

IFM Solution

Step 0—Solution Strategy

The analysis model of the shaft is shown in Fig. 8-2*b*. It has two internal torques (T^{ab} and T^{bc}) and two reactions (R_a and R_b). The angle of twist at location B is (φ_b). The support C settles by ($\varphi_c = 0.005$ rad). The problem is first solved for mechanical load and then for the settling of support.

Step 1—Formulate the Equilibrium Equations

The single EE at node B can be written as:

$$T^{bc} - T^{ab} + 100 = 0 \tag{8-14a}$$

The EE in matrix notation ($[B]\{F\} = \{P\}$) becomes

$$\begin{bmatrix} 1 & -1 \end{bmatrix} \begin{Bmatrix} T^{ab} \\ T^{bc} \end{Bmatrix} = \{100\} \tag{8-14b}$$

Step 2—Derive the Deformation Displacement Relations

The DDR ($\{\beta\} = ([B]^T\{X\})$) has the following form.

$$\begin{Bmatrix} \beta_{ab} \\ \beta_{bc} \end{Bmatrix} = \begin{bmatrix} 1 \\ -1 \end{bmatrix} \{\varphi_b\} = \begin{Bmatrix} \varphi_b \\ -\varphi_b \end{Bmatrix} \tag{8-14c}$$

In the DDR (φ_b) is the angle of twist at node B, and the deformations (β_{ab} and β_{bc}) correspond to torques (T^{ab} and T^{bc}), respectively.

Step 3—Generate the Compatibility Conditions

The single compatibility condition is obtained by eliminating the angle of twist (φ_b), between the two DDR.

$$\beta_{ab} + \beta_{bc} = 0 \tag{8-14d}$$

Step 4—Formulate the Force Deformation Relations

The FDR ($\beta = T\ell/JG$) are obtained as:

$$\beta_{ab} = \frac{50T^{ab}}{JG}$$

$$\beta_{bc} = \frac{150T^{bc}}{JG} \tag{8-14e}$$

Step 5—Express the Compatibility Condition in Torque

The compatibility conditions are expressed in torques and normalized with respect to ($50/JG$) to obtain.

$$\frac{1}{JG}\left(50T^{ab} + 150T^{bc}\right) = 0$$

$$\begin{bmatrix} 1 & 3 \end{bmatrix} \begin{Bmatrix} T^{ab} \\ T^{bc} \end{Bmatrix} = \{0\} \tag{8-14f}$$

Step 6—Form IFM Governing Equation and Solve for Torques

IFM governing equation ($[S]\{F\} = \{P\}$) is obtained by coupling the EE to the CC. Its solution yields the internal torque.

$$\begin{bmatrix} 1 & -1 \\ 1 & 3 \end{bmatrix} \begin{Bmatrix} T^{ab} \\ T^{bc} \end{Bmatrix} = \begin{Bmatrix} 100 \\ 0 \end{Bmatrix} \tag{8-14g}$$

$$\begin{Bmatrix} T^{ab} \\ T^{bc} \end{Bmatrix} = \begin{Bmatrix} 75 \\ -25 \end{Bmatrix} \text{in.-k} \tag{8-14h}$$

Step 7—Back-Calculate the Displacements and Other Response Variables

The angle of twist (φ_b) is calculated from the DDR and force deformation relationship.

$$\varphi_b = \beta_{ab} = \frac{50T^{ab}}{JG}$$

$$J = \frac{\pi d^4}{32} = 402.1\,\text{in.}^4$$

$$G = \frac{E}{2(1+0)} = 11{,}538.5\,\text{ksi}$$

$$\varphi_b = 0.8 \times 10^{-3}\,\text{rad} \tag{8-14i}$$

Reactions are back-calculated from internal torque by writing EE at the boundary.

$$R_a = -T^{ab} = -75 \text{ in.-k}$$
$$R_c = T^{bc} = -25 \text{ in.-k} \tag{8-14j}$$

Settling of Support

Initial deformations (β^0_{ab} and β^0_{bc}) are calculated from the DDR using the EE at the boundary ($\{\beta\}^0 = -[B_R]\{X^0\}$). The matrix $[B_R]$ is obtained from Eq. (8-14*j*) as

$$\begin{Bmatrix} R_a \\ R_c \end{Bmatrix} = \begin{bmatrix} -1 & 0 \\ 0 & 1 \end{bmatrix} \begin{Bmatrix} T^{ab} \\ T^{bc} \end{Bmatrix} \tag{8-15a}$$

The initial deformation is calculated as

$$\bar{x}_A = 0 \qquad \bar{x}_C = 0.005$$
$$\begin{Bmatrix} \beta^0_{ab} \\ \beta^0_{bc} \end{Bmatrix} = -\begin{bmatrix} -1 & 0 \\ 0 & 1 \end{bmatrix} \begin{Bmatrix} 0 \\ 0.005 \end{Bmatrix} = -\begin{Bmatrix} 0 \\ 0.005 \end{Bmatrix} \tag{8-15b}$$

The initial deformation (δR) is obtained as

$$\{\delta R\} = -[C]\{\beta\}^0 = [1 \quad 1] \begin{Bmatrix} 0 \\ 0.005 \end{Bmatrix} = \{0.005\} \tag{8-15c}$$

The IFM equation and the internal torque are as follows

$$\begin{bmatrix} 1 & -1 \\ 1 & 3 \end{bmatrix} \begin{Bmatrix} T^{ab} \\ T^{bc} \end{Bmatrix} = \begin{Bmatrix} 0 \\ \frac{0.005}{50} \times JG \end{Bmatrix} = \begin{Bmatrix} 0 \\ 464 \end{Bmatrix}$$
$$\begin{Bmatrix} T^{ab} \\ T^{bc} \end{Bmatrix} = \begin{Bmatrix} 116 \\ 116 \end{Bmatrix} \text{in.-k} \tag{8-15d}$$

The reactions are back-calculated from Eq. (8-15*a*).

$$\begin{Bmatrix} R_A \\ R_B \end{Bmatrix} = \begin{bmatrix} -1 & 0 \\ 0 & 1 \end{bmatrix} \begin{Bmatrix} 116 \\ 116 \end{Bmatrix} = \begin{Bmatrix} -116 \\ 116 \end{Bmatrix} \text{in.-k} \tag{8-15e}$$

The reactions self-equilibrate when there is no mechanical load.

The angles of twist are calculated as:

$$\varphi_b = \beta^e_{ab} + \beta^0_{ab} = \frac{50T^{ab}}{JG} + 0 = 1.25 \times 10^{-3} \text{ rad}$$
$$\begin{Bmatrix} \varphi^a \\ \varphi^b \\ \varphi^c \end{Bmatrix} = \begin{Bmatrix} 0 \\ 1.25 \\ 5 \end{Bmatrix} \times 10^{-3} \text{ rad} \tag{8-15f}$$

Stiffness Method Analysis

The angle of twist is calculated from the stiffness equation ($[K]\{X\} = \{P\}$).

The stiffness matrix for the problem is obtained as:

$$[K] = [B][G]^{-1}[B]^T = [\,1 \quad -1\,]\begin{bmatrix} \frac{JG}{50} & 0 \\ 0 & \frac{JG}{150} \end{bmatrix}\begin{bmatrix} 1 \\ -1 \end{bmatrix} = \left[\frac{JG}{50}\left(1+\frac{1}{3}\right)\right] = \left[123.7 \times 10^3\right]$$

$$\left[123.7 \times 10^3\right]\left\{\varphi^b\right\} = \{100\} \tag{8-16a}$$

The solution of the stiffness equation yields the angle of twist.

$$\varphi_b = \frac{100}{123.7} \times 10^{-3} = 0.8 \times 10^{-3}\ \text{rad} \tag{8-16b}$$

The internal torque is calculated using the DDR and FDR as

$$\begin{aligned} \beta_{ab} &= \varphi_b = 50\frac{T^{ab}}{JG} = 0.8 \times 10^{-3} \\ T^{ab} &= 75\ \text{in.-k} \\ \beta_{bc} &= -\varphi_b = 150\frac{T^{bc}}{JG} = -0.8 \times 10^{-3} \\ T^{bc} &= -25\ \text{in.-k} \end{aligned} \tag{8-16c}$$

The solution for settling of support is obtained first by calculating the equivalent load $\{P\}^0$ and then solving the stiffness equation for the angle of twist.

$$\{P\}^0 = [B][G]^{-1}\{\beta_0\} = -[\,1 \quad -1\,]\begin{bmatrix} \frac{JG}{50} & 0 \\ 0 & \frac{JG}{150} \end{bmatrix}\begin{Bmatrix} 0 \\ 0.005 \end{Bmatrix} = \left\{\frac{JG}{3} \times 10^{-4}\right\} = \{154.6\}$$

$$\begin{aligned} \left(123.7 \times 10^3\right)\varphi_b &= 154.6 \\ \varphi_b &= 1.25 \times 10^{-3}\ \text{rad} \end{aligned} \tag{8-16d}$$

Internal torques are back-calculated as

$$\begin{aligned} \begin{Bmatrix} \beta_{ab} \\ \beta_{bc} \end{Bmatrix} &= \begin{Bmatrix} \beta_{ab} \\ \beta_{bc} \end{Bmatrix}^e + \begin{Bmatrix} \beta_{ab} \\ \beta_{bc} \end{Bmatrix}^0 = \begin{Bmatrix} \varphi_b \\ -\varphi_b \end{Bmatrix} = \begin{Bmatrix} 1.25 \\ -1.25 \end{Bmatrix} \times 10^{-3}\ \text{rad} \\ \begin{Bmatrix} \frac{50T^{ab}}{JG} \\ \frac{150T^{bc}}{JG} \end{Bmatrix} &= \begin{Bmatrix} 1.25 \\ -1.25 \end{Bmatrix} \times 10^{-3} + \begin{Bmatrix} 0 \\ 0.005 \end{Bmatrix} \\ T^{ab} &= 116\ \text{in.-k} \\ T^{bc} &= 116\ \text{in.-k} \end{aligned} \tag{8-16e}$$

The IFM and the stiffness method produce the same response as expected.

EXAMPLE 8-2

A circular shaft fixed at both ends and made of two materials with shear modulus G_1 and G_2 and polar moment of inertia J_1 and J_2 is shown in Fig. 8-3*a*. The composite shaft, which has a total length of (ℓ), is subjected to a torque $\bar{T}$ at a distance (a) from its left support. Analyze the shaft for internal torque and angle of twist. Also calculate the response for the following numerical values: $G_1 = 6500$ ksi, $G_2 = 4000$ ksi; $J_1 = 25.13$ in.^{4}, $J_2 = 23.56$ in.^{4}; $a = 78$ in., $\ell = 138$ in., and $\bar{T} = 20$ in.-k.

Integrated Force Method Solution

Step 0—Solution Strategy

The free-body diagram is shown in Fig. 8-3*b*. The shaft has two members with internal torques (T_1 and T_2) and three nodes. The angles of twist at the support nodes are restrained ($\varphi_1 = \varphi_3 = 0$). It is ($\varphi_2$) at node 2. The number of force unknown is two ($n = 2$), and (φ_2) is the single displacement unknown ($m = 1$). The shaft is one degree indeterminate ($r = n - m = 1$).

Step 1—Formulate the Equilibrium Equation

Torque balance at node 2 is the single EE.

$$-T_1 + T_2 + \bar{T} = 0$$

The EE in matrix notation can be written as

$$[1 \quad -1]\begin{Bmatrix} T_1 \\ T_2 \end{Bmatrix} = \{\bar{T}\} \tag{8-17a}$$

The shaft is one-degree indeterminate because a single EE contains two torques.

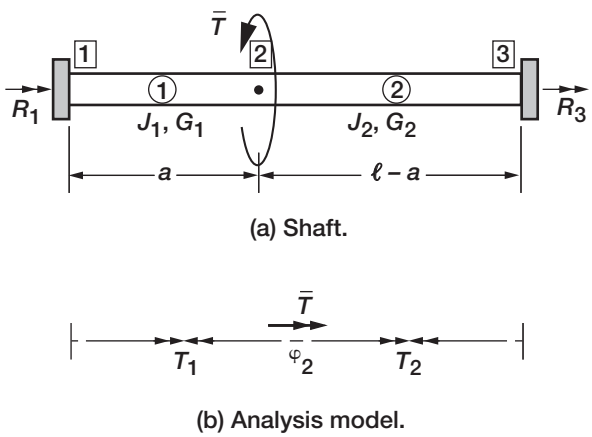

FIGURE 8-3 *Composite shaft.*

Step 2—Derive the Deformation Displacement Relations
The DDR ($\{\beta\} = [B]^T\{X\}$) are obtained as

$$\begin{aligned} \beta_1 &= \varphi_2 \\ \beta_2 &= -\varphi_2 \end{aligned} \tag{8-17b}$$

where (φ_2) is the dual variable of the EE, and the deformations (β_1, β_2) correspond to torques (T_1, T_2), respectively.

Step 3—Generate the Compatibility Conditions
The single CC is obtained by eliminating (φ_2) from the two DDR.

$$\begin{aligned} \beta_1 + \beta_2 &= 0 \\ \begin{bmatrix} 1 & 1 \end{bmatrix} \begin{Bmatrix} \beta_1 \\ \beta_2 \end{Bmatrix} &= \{0\} \end{aligned} \tag{8-17c}$$

The null property of EE and CC matrices is verified as

$$\begin{bmatrix} 1 & -1 \end{bmatrix} \begin{bmatrix} 1 \\ 1 \end{bmatrix} = [0] \tag{8-17d}$$

Step 4—Formulate the Force Deformation Relations
The FDR for the problem is obtained as

$$\begin{aligned} \beta_1 &= \frac{aT_1}{J_1G_1} \\ \beta_2 &= \frac{(\ell - a)T_2}{J_2G_2} \end{aligned} \tag{8-17e}$$

Step 5—Express the CC in Torques
The CC written in terms of torque has the following form.

$$\begin{bmatrix} \frac{a}{J_1G_1} & \frac{(\ell-a)}{J_2G_2} \end{bmatrix} \begin{Bmatrix} T_1 \\ T_2 \end{Bmatrix} = \{0\} \tag{8-17f}$$

Step 6—Couple the EE and CC to Obtain IFM Equations and Solve for Torques
The IFM equation is as follows:

$$\begin{bmatrix} 1 & -1 \\ \frac{a}{J_1G_1} & \frac{(\ell-a)}{J_2G_2} \end{bmatrix} \begin{Bmatrix} T_1 \\ T_2 \end{Bmatrix} = \begin{Bmatrix} \overline{T} \\ 0 \end{Bmatrix} \tag{8-17g}$$

Solution to IFM equation yields the torques.

$$T_1 = \frac{(\ell - a)\overline{T}}{J_2G_2\left(\frac{a}{J_1G_1} + \frac{(\ell-a)}{J_2G_2}\right)}$$

$$T_2 = -\frac{a\overline{T}}{J_1G_1\left(\frac{a}{J_1G_1} + \frac{(\ell-a)}{J_2G_2}\right)} \tag{8-17h}$$

Step 7—Back-Calculate the Angle of Twist from the DDR

$$\varphi_2 = \beta_1 = \frac{aT_1}{J_1G_1} = \frac{a(\ell - a)}{J_1G_1 \quad J_2G_2} \quad \frac{\overline{T}}{\left(\frac{a}{J_1G_1} + \frac{(\ell-a)}{J_2G_2}\right)}$$

$$\varphi_2 = \frac{\overline{T}}{\left(\frac{J_1G_1}{a} + \frac{J_2G_2}{(\ell-a)}\right)} \tag{8-17i}$$

Stiffness Method Analysis

The angle of twist is calculated from the stiffness equation ($[K]\{X\} = \{P\}$).

The stiffness matrix for the problem is obtained as:

$$[K] = [B][G]^{-1}[B]^T = [\,1 \quad -1\,]\begin{bmatrix} \frac{J_1G_1}{a} & 0 \\ 0 & \frac{J_2G_2}{(\ell-a)} \end{bmatrix}\begin{bmatrix} 1 \\ -1 \end{bmatrix} = \left[\frac{J_1G_1}{a} + \frac{J_2G_2}{(\ell - a)}\right] \tag{8-18a}$$

The solution of the stiffness equation yields the angle of twist.

$$\left(\frac{J_1G_1}{a} + \frac{J_2G_2}{(\ell - a)}\right)\varphi_2 = \overline{T}$$

$$\varphi_2 = \frac{\overline{T}}{\left(\frac{J_1G_1}{a} + \frac{J_2G_2}{(\ell-a)}\right)} \tag{8-18b}$$

The internal torque is calculated using the DDR and FDR as

$$T_1 = \frac{J_1G_1}{a}\varphi_2 = \frac{(\ell - a)\overline{T}}{J_2G_2\left(\frac{a}{J_1G_1} + \frac{(\ell-a)}{J_2G_2}\right)}$$

$$T_2 = \frac{J_2G_2}{(\ell - a)}\varphi_2 = \frac{a\overline{T}}{J_1G_1\left(\frac{a}{J_1G_1} + \frac{(\ell-a)}{J_2G_2}\right)} \tag{8-18c}$$

The responses generated by IFM and the stiffness methods are in agreement.

The values of the response variables are calculated by substituting the numerical values of the parameters.

$$J_1G_1 = 25.13 \times 6500 = 163.35\,\text{in.}^2\text{-k}$$

$$J_2G_2 = 23.56 \times 4000 = 94.25\,\text{in.}^2\text{-k}$$

$$T_1 = 11.4\,\text{in.-k}$$

$$T_2 = -8.6\,\text{in.-k}$$

$$\varphi_2 = 5.46 \times 10^{-3}\,\text{rad} \tag{8-18d}$$

Reactions are back-calculated as

$$R_1 = -T_1 = -11.4\,\text{in.-k}$$

$$R_3 = T_2 = -8.6\,\text{in.-k} \tag{8-18e}$$

Reactions equilibrate the external torque ($R_1 + R_3 + \overline{T} = 0$).

EXAMPLE 8-3

A uniform circular shaft made of steel is fixed at both ends as shown in Fig. 8-4*a*. It is subjected to loads ($\overline{T}$, $-2\overline{T}$, $\overline{T}$) at quarter, half, and three-quarter span locations, respectively. The external loads are self-equilibrating since ($\overline{T} - 2\overline{T} + \overline{T} = 0$). Analyze the shaft for internal torque and angle of twist. Also calculate the response for the following numerical values: length $= \ell = 4a = 8m$, modulus $G = 75\,\text{GPa}$, polar moment of inertia $J = 6434\,\text{cm}^4$ that corresponds to a shaft diameter of 16 cm, and $\overline{T} = 2\,\text{kN} \cdot \text{m}$.

Integrated Force Method Solution

Step 0—Solution Strategy

The free-body diagram is shown in Fig. 8-4*b*. The shaft is modeled with four members with internal torques (T_1, T_2, T_3, and T_4) and five nodes. The angles of twist at the support nodes are restrained ($\varphi_1 = \varphi_5 = 0$) and these are ($\varphi_2$, φ_3, φ_4) at the intermediate nodes. The number of force unknown is four ($n = 4$), and displacement unknown is three ($m = 3$). The shaft is one-degree indeterminate ($r = n - m = 1$).

Step 1—Formulate the Equilibrium Equation

Torque balance at nodes (2, 3, and 4) yield three EE.

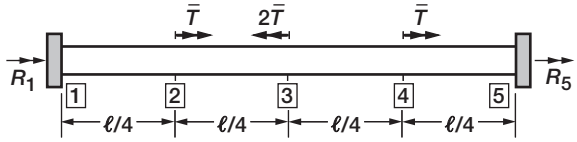

(a) Geometry and load.

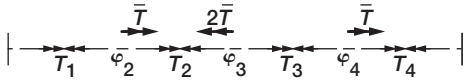

(b) Analysis model.

FIGURE 8-4 *Shaft with self-equilibrating external torque.*

$$T_1 - T_2 = \overline{T}$$
$$T_2 - T_3 = -2\overline{T}$$
$$T_3 - T_4 = \overline{T}$$

The EE in matrix notation can be written as

$$\begin{bmatrix} 1 & -1 & 0 & 0 \\ 0 & 1 & -1 & 0 \\ 0 & 0 & 1 & -1 \end{bmatrix} \begin{Bmatrix} T_1 \\ T_2 \\ T_3 \\ T_4 \end{Bmatrix} = \begin{Bmatrix} \overline{T} \\ -2\overline{T} \\ \overline{T} \end{Bmatrix} \tag{8-19a}$$

The shaft is one-degree indeterminate because three EE contain four internal torques.

Step 2—Derive the Deformation Displacement Relations

The DDR ($\{\beta\} = [B]^T\{X\}$) are obtained as

$$\begin{aligned} \beta_1 &= \varphi_2 \\ \beta_2 &= -\varphi_2 + \varphi_3 \\ \beta_3 &= -\varphi_3 + \varphi_4 \\ \beta_4 &= -\varphi_4 \end{aligned} \tag{8-19b}$$

where (φ_2, φ_3, φ_4) are the dual variables of the three EE, and the deformations (β_1, β_2, β_3, β_4) correspond to torques (T_1, T_2, T_3, T_4), respectively.

Step 3—Generate the Compatibility Conditions

The single CC is obtained by eliminating the three twist-angles from the four DDR.

$$\beta_1 + \beta_2 + \beta_3 + \beta_4 = 0 \tag{8-19c}$$

The null property of EE and CC matrices is verified as

$$\begin{bmatrix} 1 & -1 & 0 & 0 \\ 0 & 1 & -1 & 0 \\ 0 & 0 & 1 & -1 \end{bmatrix} \begin{bmatrix} 1 \\ 1 \\ 1 \\ 1 \end{bmatrix} = \begin{bmatrix} 0 \\ 0 \\ 0 \end{bmatrix} \tag{8-19d}$$

Step 4—Formulate the Force Deformation Relations

The FDR for the problem is obtained as

$$\begin{aligned} \beta_1 &= \frac{aT_1}{JG} \\ \beta_2 &= \frac{aT_2}{JG} \\ \beta_3 &= \frac{aT_3}{JG} \\ \beta_4 &= \frac{aT_4}{JG} \end{aligned} \tag{8-19e}$$

Step 5—Express the CC in Torques

The CC written in terms of torque has the following form.

$$\frac{a}{JG}(T_1 + T_2 + T_3 + T_4) = 0 \tag{8-19f}$$

Step 6—Couple the EE and CC to Obtain IFM Equations and Solve for Torques

The IFM equations are as follows

$$\begin{bmatrix} 1 & -1 & 0 & 0 \\ 0 & 1 & -1 & 0 \\ 0 & 0 & 1 & -1 \\ 1 & 1 & 1 & 1 \end{bmatrix} \begin{Bmatrix} T_1 \\ T_2 \\ T_3 \\ T_4 \end{Bmatrix} = \begin{Bmatrix} \overline{T} \\ -2\overline{T} \\ \overline{T} \\ 0 \end{Bmatrix} \tag{8-19g}$$

The solution to the IFM equation yields the torques.

$$\begin{aligned} T_1 &= 0 \\ T_2 &= -\overline{T} \\ T_3 &= \overline{T} \\ T_4 &= 0 \end{aligned} \tag{8-19h}$$

Step 7—Back-Calculate the Angle of Twist from the DDR

$$\varphi_2 = \beta_1 = 0$$
$$\varphi_3 = -\frac{a\overline{T}}{JG}$$
$$\varphi_4 = -\beta_4 = 0 \tag{8-19i}$$

Stiffness Method Analysis

The three twist-angles are calculated from the three stiffness equations ($[K]\{X\} = \{P\}$).

The stiffness matrix [K] for the problem is obtained as:

$$[K] = [B][G]^{-1}[B]^T = \begin{bmatrix} 1 & -1 & 0 & 0 \\ 0 & 1 & -1 & 0 \\ 0 & 0 & 1 & -1 \end{bmatrix} \left(\frac{JG}{a}\right) \begin{bmatrix} 1 & 0 & 0 & 0 \\ 0 & 1 & 0 & 0 \\ 0 & 0 & 1 & 0 \\ 0 & 0 & 0 & 1 \end{bmatrix} \begin{bmatrix} 1 & 0 & 0 \\ -1 & 1 & 0 \\ 0 & -1 & 1 \\ 0 & 0 & -1 \end{bmatrix}$$

$$[K] = \left(\frac{JG}{a}\right) \begin{bmatrix} 2 & -1 & 0 \\ -1 & 2 & -1 \\ 0 & -1 & 2 \end{bmatrix} \tag{8-20a}$$

The solution of the stiffness equation yields the twist-angles.

$$\left(\frac{JG}{a}\right) \begin{bmatrix} 2 & -1 & 0 \\ -1 & 2 & -1 \\ 0 & -1 & 2 \end{bmatrix} \begin{Bmatrix} \varphi_2 \\ \varphi_3 \\ \varphi_4 \end{Bmatrix} = \begin{Bmatrix} \overline{T} \\ -2\overline{T} \\ \overline{T} \end{Bmatrix}$$
$$\varphi_2 = 0$$
$$\varphi_3 = -\frac{a\overline{T}}{JG}$$
$$\varphi_4 = 0 \tag{8-20b}$$

The internal torque is calculated using the DDR and FDR as

$$T_1 = \frac{JG}{a}\beta_1 = \frac{JG}{a}\varphi_2 = 0$$
$$T_2 = \frac{JG}{a}\beta_2 = \frac{JG}{a}\varphi_3 = -\overline{T}$$
$$T_3 = \frac{JG}{a}\beta_3 = -\frac{JG}{a}\varphi_3 = \overline{T}$$
$$T_4 = \frac{JG}{a}\beta_4 = -\frac{JG}{a}\varphi_4 = 0 \tag{8-20c}$$

The responses generated by IFM and the stiffness methods are in agreement.

The values of the response variables are calculated by substituting the numerical values of the parameters.

$$\begin{Bmatrix} T_1 \\ T_2 \\ T_3 \\ T_4 \end{Bmatrix} = \begin{Bmatrix} 0 \\ 2 \\ -2 \\ 0 \end{Bmatrix}_{\text{kN·m}}$$

$$\begin{Bmatrix} \varphi_1 \\ \varphi_2 \\ \varphi_3 \\ \varphi_4 \\ \varphi_5 \end{Bmatrix} = \begin{Bmatrix} 0 \\ 0 \\ -0.083 \\ 0 \\ 0 \end{Bmatrix}_{\text{rad}} \tag{8-20d}$$

The reactions at the support are calculated as

$$\begin{aligned} R_1 + T_1 &= 0 \\ R_5 - T_4 &= 0 \\ R_1 = R_5 &= 0 \end{aligned} \tag{8-20e}$$

The reactions are zero because the external loads self-equilibrate. Because there is no reaction the two shaft segments near the support carry no torque ($T_1 = T_4 = 0$).

EXAMPLE 8-4

A uniform circular shaft of length ($\ell = 4$a) that is made of steel is fixed at both ends and also at the midspan as shown in Fig. 8-5*a*. It is subjected to loads ($\overline{T} = 20$ in.-k) at quarter and three-quarter span locations. The middle support (or node 3) settles by φ_3^0 rad. Analyze the shaft for internal torque and angle of twist.

Integrated Force Method Solution

Step 0—Solution Strategy

The free-body diagram is shown in Fig. 8-5*b*. The shaft is modeled with four members with internal torques (T_1, T_2, T_3, and T_4) and five nodes. The angles of twist at the support nodes are restrained ($\varphi_1 = \varphi_3 = \varphi_5 = 0$). The intermediate nodes (2, 4) are free to twist by (φ_2, φ_4) rad, respectively. The number of force unknown is four ($n = 4$), and displacement unknown is two ($m = 2$). The shaft is two degrees indeterminate ($r = n - m = 2$). Solution is obtained for three different cases: (1) mechanical load, (2) support settling, and (3) the combined effect of 1 and 2.

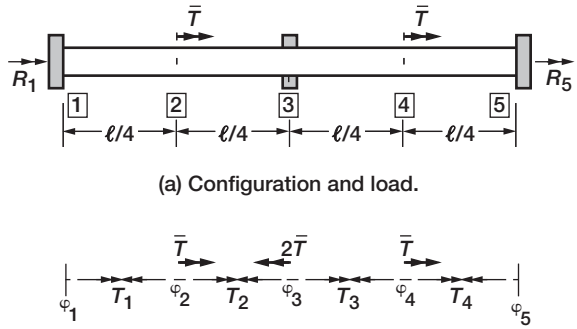

(a) Configuration and load.

(b) Analysis model.

FIGURE 8-5 *Shaft with an intermediate support.*

Load Case 1—Mechanical Load

Step 1—Formulate the Equilibrium Equation

Torque balance at nodes (2, 4) yields two EE.

$$T_1 - T_2 = \overline{T}$$
$$T_3 - T_4 = \overline{T}$$

The EE in matrix notation can be written as

$$\begin{bmatrix} 1 & -1 & 0 & 0 \\ 0 & 0 & 1 & -1 \end{bmatrix} \begin{Bmatrix} T_1 \\ T_2 \\ T_3 \\ T_4 \end{Bmatrix} = \begin{Bmatrix} 20 \\ 20 \end{Bmatrix} \tag{8-21a}$$

The shaft is two-degrees indeterminate because two EE contain four torques. The first equation is not coupled to the second equation or the equilibrium equations are uncoupled. The problem can be solved as two uncoupled shafts: two left shafts with nodes 1, 2, and 3; and two right shafts containing nodes 3, 4, and 5.

Step 2—Derive the Deformation Displacement Relations

The DDR ($\{\beta\} = [B]^T\{X\}$) are obtained as

$$\begin{aligned} \beta_1 &= \varphi_2 \\ \beta_2 &= -\varphi_2 \\ \beta_3 &= \varphi_4 \\ \beta_4 &= -\varphi_4 \end{aligned} \tag{8-21b}$$

where (φ_2 and φ_4) are the dual variable of the two EE, and the deformations (β_1, β_2, β_3, β_4) correspond to torques (T_1, T_2, T_3, T_4), respectively.

Step 3—Generate the Compatibility Conditions

Two CC are obtained by eliminating the two twist-angles from the four DDR.

$$\beta_1 + \beta_2 = 0$$
$$\beta_3 + \beta_4 = 0$$

$$\begin{bmatrix} 1 & 1 & 0 & 0 \\ 0 & 0 & 1 & 1 \end{bmatrix} \begin{Bmatrix} \beta_1 \\ \beta_2 \\ \beta_3 \\ \beta_4 \end{Bmatrix} = \begin{Bmatrix} 0 \\ 0 \end{Bmatrix} \tag{8-21c}$$

The compatibility conditions are also uncoupled. The first CC correspond to the left shaft, while the second correspond to the right shaft.

The null property of EE and CC matrices are verified as

$$\begin{bmatrix} 1 & -1 & 0 & 0 \\ 0 & 0 & 1 & -1 \end{bmatrix} \begin{bmatrix} 1 & 0 \\ 1 & 0 \\ 0 & 1 \\ 0 & 1 \end{bmatrix} = \begin{bmatrix} 0 & 0 \\ 0 & 0 \end{bmatrix} \tag{8-21d}$$

Step 4—Formulate the Force Deformation Relations

The FDR for the problem is obtained as

$$\begin{aligned} \beta_1 &= \frac{T_1 a}{GJ} \\ \beta_2 &= \frac{T_2 a}{GJ} \\ \beta_3 &= \frac{T_3 a}{GJ} \\ \beta_4 &= \frac{T_4 a}{GJ} \end{aligned} \tag{8-21e}$$

Step 5—Express the CC in Torques

The CC written in terms of torque has the following form.

$$\begin{aligned} \frac{GJ}{a}(T_1 + T_2) &= 0 \\ \frac{GJ}{a}(T_3 + T_4) &= 0 \end{aligned} \tag{8-21f}$$

The compatibility conditions expressed in torque are also uncoupled.

Step 6—Couple the EE and CC to Obtain IFM Equations and Solve for Torques
The IFM equations are as follows

$$\begin{bmatrix} 1 & -1 & 0 & 0 \\ 0 & 0 & 1 & -1 \\ 1 & 1 & 0 & 0 \\ 0 & 0 & 1 & 1 \end{bmatrix} \begin{Bmatrix} T_1 \\ T_2 \\ T_3 \\ T_4 \end{Bmatrix} = \begin{Bmatrix} 20 \\ 20 \\ 0 \\ 0 \end{Bmatrix} \tag{8-21g}$$

Solution to the IFM equation yields the torques.

$$\begin{aligned} T_1 &= 10\,\text{in.-k} \\ T_2 &= -10\,\text{in.-k} \\ T_3 &= 10\,\text{in.-k} \\ T_4 &= -10\,\text{in.-k} \end{aligned} \tag{8-21h}$$

Step 7—Back-Calculate the Angle of Twist from the DDR

$$\begin{aligned} \varphi_2 = \beta_1 &= \frac{T_1 a}{GJ} = \frac{10a}{GJ} \\ \varphi_4 = \beta_3 &= \frac{T_3 a}{GJ} = \frac{10a}{GJ} \end{aligned} \tag{8-21i}$$

Stiffness Method Analysis

The two twist-angles are calculated from the two stiffness equations ($[K]\{X\} = \{P\}$).

The stiffness matrix for the problem is obtained as:

$$\begin{aligned} [K] &= \begin{bmatrix} 1 & -1 & 0 & 0 \\ 0 & 0 & 1 & -1 \end{bmatrix} \left(\frac{GJ}{a}\right) \begin{bmatrix} 1 & 0 & 0 & 0 \\ 0 & 1 & 0 & 0 \\ 0 & 0 & 1 & 0 \\ 0 & 0 & 0 & 1 \end{bmatrix} \begin{bmatrix} 1 & 0 \\ -1 & 0 \\ 0 & 1 \\ 0 & -1 \end{bmatrix} \\ &= \left(\frac{GJ}{a}\right) \begin{bmatrix} 2 & 0 \\ 0 & 2 \end{bmatrix} \begin{Bmatrix} \varphi_2 \\ \varphi_4 \end{Bmatrix} = \begin{Bmatrix} 20 \\ 20 \end{Bmatrix} \end{aligned} \tag{8-22a}$$

The stiffness matrix is uncoupled because the middle support separates the shaft into two problems.

The solution of the stiffness equation yields the twist angles.

$$\begin{aligned} \varphi_2 &= \frac{10a}{GJ} \\ \varphi_4 &= \frac{10a}{GJ} \end{aligned} \tag{8-22b}$$

The internal torque is calculated using the DDR and FDR as

$$T_1 = \frac{GJ\beta_1}{a} = \frac{GJ}{a}\varphi_2 = 10\,\text{in.-k}$$
$$T_2 = \frac{GJ\beta_2}{a} = -\frac{GJ}{a}\varphi_2 = -10\,\text{in.-k}$$
$$T_3 = \frac{GJ\beta_3}{a} = \frac{GJ}{a}\varphi_4 = 10\,\text{in.-k}$$
$$T_4 = \frac{GJ\beta_4}{a} = -\frac{GJ}{a}\varphi_4 = -10\,\text{in.-k} \qquad (8\text{-}22c)$$

The responses generated by IFM and the stiffness methods are in agreement.

The stiffness equation is uncoupled and the twist-angle φ_2 can be calculated independently of φ_4, and vice versa. Earlier it was shown that the torques (T_1, T_2) and (T_3, T_4) are also uncoupled. The response variables are uncoupled because of the support at node 3, which in essence transforms the shaft into two unrelated problems: first shaft with nodes (1, 2, and 3), and the second shaft with nodes (3, 4, and 5).

Load Case 2—Settling of Support

The settling of support in IFM is treated through the effective deformation vector $\{\delta R\}$, which is calculated as:

$$\{\delta R\} = -[C]\{\beta\}^0$$
$$\{\beta\}^0 = -[B_R]\{\varphi\}$$

$$[B_R] = [0 \;\; 1 \;\; -1 \;\; 0], \text{ since reaction } (R_3 = T_2 - T_3) \text{ and } \{\varphi\} = \{\varphi_3^0\} \; \{\beta\}^0 = -\begin{Bmatrix} 0 \\ 1 \\ -1 \\ 0 \end{Bmatrix}\varphi_3^0$$

$$\{\delta R\} = \begin{bmatrix} 1 & 1 & 0 & 0 \\ 0 & 0 & 1 & 1 \end{bmatrix}\begin{Bmatrix} 0 \\ 1 \\ -1 \\ 0 \end{Bmatrix}\varphi_3^0 = \begin{Bmatrix} 1 \\ -1 \end{Bmatrix}\varphi_3^0 \qquad (8\text{-}23a)$$

The IFM equation with $\{\delta R\}$ can be written as.

$$\begin{bmatrix} 1 & -1 & 0 & 0 \\ 0 & 0 & 1 & 1 \\ 1 & 1 & 0 & 0 \\ 0 & 0 & 1 & 1 \end{bmatrix}\begin{Bmatrix} T_1 \\ T_2 \\ T_3 \\ T_4 \end{Bmatrix} = \begin{Bmatrix} 0 \\ 0 \\ \frac{GJ}{a}\varphi_3^0 \\ -\frac{GJ}{a}\varphi_3^0 \end{Bmatrix} \qquad (8\text{-}23b)$$

Solution of Eq. (8-23*b*) yields the torques.

$$T_1 = \frac{GJ}{2a}\varphi_3^0$$

$$T_2 = \frac{GJ}{2a}\varphi_3^0$$

$$T_3 = -\frac{GJ}{2a}\varphi_3^0$$

$$T_4 = -\frac{GJ}{2a}\varphi_3^0 \tag{8-23c}$$

The angles of twist are back-calculated using the deformation displacement relation and the force deformation relations as

$$\beta_1^e = \beta_1 - \beta_1^0$$

$$\frac{T_1 a}{GJ} = \varphi_2 = \frac{\varphi_3^0}{2}$$

$$\beta_3^e = \beta_3 - \beta_3^0$$

$$-\frac{T_3 a}{GJ} = \varphi_4 - \varphi_3^0$$

$$\varphi_4 = -\frac{T_3 a}{GJ} + \varphi_3^0 = \frac{-\varphi_3^0}{2} + \varphi_3^0 = \frac{\varphi_3^0}{2}$$

$$\begin{Bmatrix} \varphi_1 \\ \varphi_2 \\ \varphi_3 \\ \varphi_4 \\ \varphi_5 \end{Bmatrix} = \begin{Bmatrix} 0 \\ \frac{\varphi_3^0}{2} \\ \varphi_3^0 \\ \frac{\varphi_3^0}{2} \\ 0 \end{Bmatrix} \tag{8-23d}$$

In the stiffness method the equivalent load ($\{P\}^0 = [B][G]^{-1}\{\beta\}^0$) because of the settling of support is calculated as

$$\{P\}^0 = [B][G]^{-1}\{\beta\}^0 = \begin{bmatrix} 1 & -1 & 0 & 0 \\ 0 & 0 & 1 & 0 \end{bmatrix} \left(\frac{GJ}{a}\right) \begin{bmatrix} 1 & 0 & 0 & 0 \\ 0 & 1 & 0 & 0 \\ 0 & 0 & 1 & 0 \\ 0 & 0 & 0 & 1 \end{bmatrix} \begin{Bmatrix} 0 \\ -1 \\ 1 \\ 0 \end{Bmatrix} \varphi_3^0$$

$$\{P\}^0 = \left(\frac{GJ}{a}\right) \begin{Bmatrix} 1 \\ 1 \end{Bmatrix} \varphi_3^0 \tag{8-23e}$$

The stiffness equations are solved to obtain the angles of twist.

$$\left(\frac{GJ}{a}\right)\begin{bmatrix} 2 & 0 \\ 0 & 2 \end{bmatrix}\begin{Bmatrix} \varphi_2 \\ \varphi_4 \end{Bmatrix} = \left(\frac{GJ}{a}\right)\begin{Bmatrix} 1 \\ 1 \end{Bmatrix}\varphi_3^0$$

$$\varphi_2 = \frac{\varphi_3^0}{2}$$

$$\varphi_4 = \frac{\varphi_3^0}{2} \tag{8-23f}$$

The internal torques are back-calculated as

$$T_1 = \frac{JG}{a}\beta_1^e = \frac{JG}{a}\left(\beta_1 - \beta_1^0\right) = \frac{JG}{a}\varphi_2 = \frac{JG}{2a}\varphi_3^0$$

$$T_2 = \frac{JG}{a}\left(-\varphi_2 - \varphi_3^0\right) = \frac{JG}{2a}\varphi_3^0$$

$$T_3 = \frac{JG}{a}\left(\varphi_4 - \varphi_3^0\right) = -\frac{JG}{2a}\varphi_3^0$$

$$T_4 = \frac{JG}{a}\left(-\varphi_4\right) = -\frac{JG}{2a}\varphi_3^0 \tag{8-23g}$$

Load Case 3—Combined Load

Response because of the combined mechanical and settling loads can be calculated by adding the individual responses. Alternately, it can be calculated by adding the load components and then calculating the response. The later approach for the IFM yields the following equations ($[S]\{F\} = \{P\}^*$).

$$\begin{bmatrix} 1 & -1 & 0 & 0 \\ 0 & 0 & 1 & -1 \\ 1 & 1 & 0 & 0 \\ 0 & 0 & 1 & 1 \end{bmatrix}\begin{Bmatrix} T_1 \\ T_2 \\ T_3 \\ T_4 \end{Bmatrix} = \begin{Bmatrix} 20 \\ 20 \\ 0 \\ 0 \end{Bmatrix} + \begin{Bmatrix} 0 \\ 0 \\ \frac{JG}{a}\varphi_3^0 \\ -\frac{JG}{a}\varphi_3^0 \end{Bmatrix} = \begin{Bmatrix} 20 \\ 20 \\ \frac{JG}{a}\varphi_3^0 \\ -\frac{JG}{a}\varphi_3^0 \end{Bmatrix} \tag{8-24a}$$

Solution of Eq. (8-24*a*) yields the torques.

$$\begin{Bmatrix} T_1 \\ T_2 \\ T_3 \\ T_4 \end{Bmatrix} = \begin{Bmatrix} 10 + \frac{GJ}{2a}\varphi_3^0 \\ -10 + \frac{JG}{2a}\varphi_3^0 \\ 10 - \frac{GJ}{2a}\varphi_3^0 \\ -10 - \frac{GJ}{2a}\varphi_3^0 \end{Bmatrix} \tag{8-24b}$$

The angles of twist are back-calculated as

$$\varphi_2 = \beta_1 = \beta_1^e + \beta_1^0 = \frac{10a}{JG} + \frac{\varphi_3^0}{2}$$

$$\varphi_4 = \beta_3 = \beta_3^e + \beta_3^0 = \frac{10a}{JG} + \frac{\varphi_3^0}{2} \tag{8-24c}$$

The governing equation ($[K]\{X\} = \{P\} + [B][G]^{-1}\{\beta\}^0$) of the stiffness method can be written as:

$$\left(\frac{JG}{a}\right)\begin{bmatrix} 2 & 0 \\ 0 & 2 \end{bmatrix}\begin{Bmatrix} \varphi_2 \\ \varphi_4 \end{Bmatrix} = \begin{Bmatrix} 20 + \frac{JG}{a}\varphi_3^0 \\ 20 + \frac{JG}{a}\varphi_3^0 \end{Bmatrix} \tag{8-24d}$$

Solution of Eq. (8-24*d*) yields the angles of twist.

$$\varphi_2 = \frac{10a}{JG} + \frac{\varphi_3^0}{2}$$

$$\varphi_4 = \frac{10a}{JG} + \frac{\varphi_3^0}{2} \tag{8-24e}$$

Torques are back-calculated as

$$T_1 = \frac{JG}{a}\left(\beta_1 - \beta_1^0\right) = 10 + \frac{JG}{2a}\varphi_3^0$$

$$T_2 = \frac{JG}{a}\left(\beta_2 - \beta_2^0\right) = -10 + \frac{JG}{2a}\varphi_3^0$$

$$T_3 = \frac{JG}{a}\left(\beta_3 - \beta_3^0\right) = 10 - \frac{JG}{2a}\varphi_3^0$$

$$T_4 = \frac{JG}{a}\left(\beta_4 - \beta_4^0\right) = -10 - \frac{JG}{2a}\varphi_3^0 \tag{8-24f}$$

The response from the combined load is equal to the sum of the responses from mechanical load and the settling load.

Problems

Use the properties of material given in Tables A5-1 and A5-2 to solve the problems.

8-1 Model the four shafts shown in Fig. P8-1*a* to *d* for analysis by force and stiffness methods. For each model, specify the internal torques, twist-angles, deformation variables, and reactions, as well as the number of equilibrium equations and compatibility conditions, the degree of internal and external indeterminacy.

The shaft with fixed boundaries shown in Fig. P8-1*a* has a span ($4m$) and it is made of two members with torsional rigidities (JG and $2JG$). It is subjected to a torque ($T^0 = 2\,\text{kN}\cdot\text{m}$) at the midspan location.

A uniform shaft with fixed ends and span (ℓ) is subjected to equal torques (T^0) in opposing directions at one-third and two-thirds span locations as shown in Fig. P8-1*b*.

The five-meter-long uniform shaft shown in Fig. P8-1*c* has fixed boundaries at *A, B*, and *D*, while it is free to twist at *C*. Support B settles by amount ($\varphi^0 = 0.1$ rad) and it is subjected to a load ($T^0 = 2\,\text{kN}\cdot\text{m}$) at location *C*.

The stepped shaft, shown in Fig. P8-1*d*, has four segments and it is fixed at locations *A*, *B*, *C*, and *D*, while it is free to twist at support *E* with a settling of φ^0 radian. The torsional rigidities and lengths are marked in the figure. The shaft is subjected to torque (T^0) at the center of each member as shown in the figure.

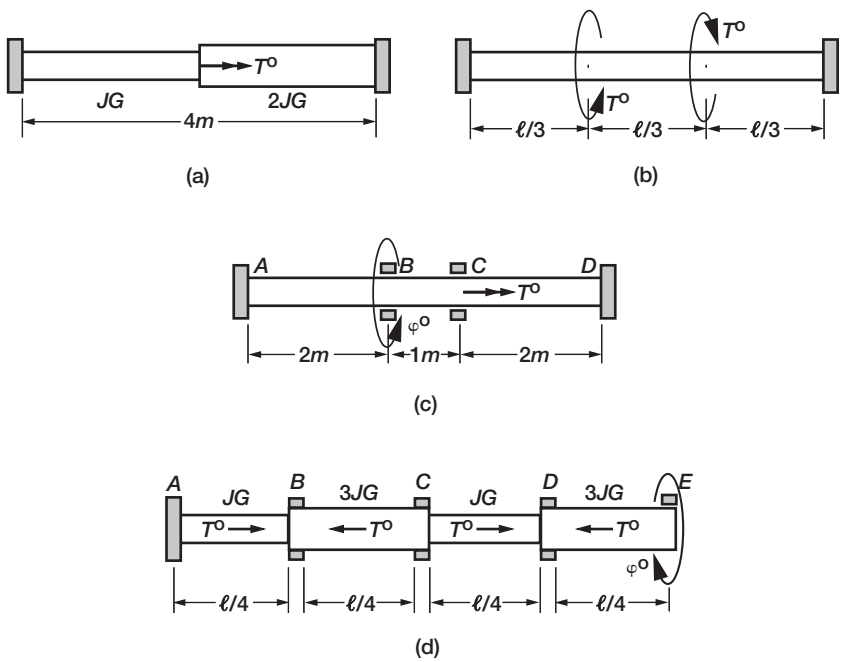

FIGURE P8-1

8-2 Analyze by IFM and stiffness method the solid stepped aluminum shaft shown in Fig. P8-2 for internal torques, reactions, and twist-angles. The dimensions and load are marked in the figure.

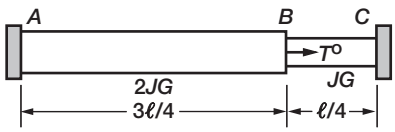

FIGURE P8-2

8-3 Calculate the internal torques, reactions, and twist angles in the shaft shown in Fig. P8-3 either by IFM or the stiffness method. The section *AB* is a two-meter-long steel tube with 80 mm outer diameter and 60 mm inner diameter. The solid section *BC* is made of aluminum and it is 2 m long with a diameter of 80 mm. The shaft is subjected to three load cases as:

Case 1: A torque ($T = 3\,\text{kN} \cdot \text{m}$) applied at the center span
Case 2: The support C settles by ($\varphi^0 = 0.1\,\text{rad}$)
Case 3: Load Case 1 and 2 are applied simultaneously

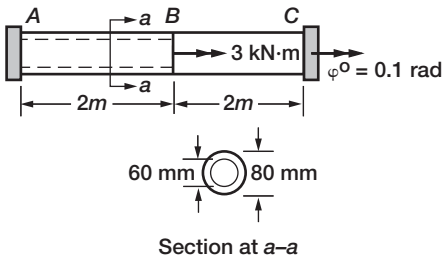

FIGURE P8-3

8-4 Calculate either by IFM or the stiffness method, the reactions at supports *A* and *D* for the uniform shaft with torsional rigidity (*JG*) as shown in Fig. P8-4, for the following load cases.

Case 1: Two torques (T^0) are applied at one-third and two-thirds span locations
Case 2: Torques applied at one-third span location are (T^0). At two-thirds location it is in the negative direction ($-T^0$)
Case 3: Load Case 1 and 2 are applied simultaneously

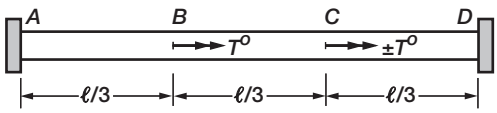

FIGURE P8-4

8-5 Calculate the reactions at supports A and C for the two shafts shown in Fig. P8-5 for a torque ($T^0 = 1\,\text{kN} \cdot \text{m}$) applied at the midspan location.

1. The first shaft is 5 m long and it is made of two solid steel members with diameters of 40 and 25 mm, respectively.
2. The second shaft is made of tubular aluminum members. The first and second members have diameters and thickness of (40 and 5 mm) and (25 and 5 mm), respectively.

Compare the reactions in the shafts.

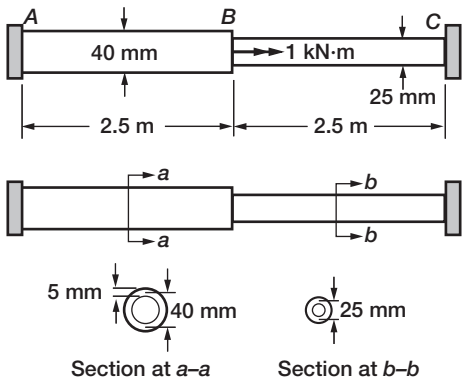

FIGURE P8-5

8-6 The solid steel shaft shown in Fig. P8-6 has a total length of 40 ft. It is fixed at all the supports (A, B, C, D, and E). Each midspan is subjected to a torque of magnitude (T^0). The direction for the four torques are (counterclockwise, clockwise, cw, and ccw). The four supports at locations (A, B, D, and E) settle by (φ^0) radial in (cw, ccw, ccw, and cw) direction. Calculate the internal torques, reactive torques, and angle of twist in each member.

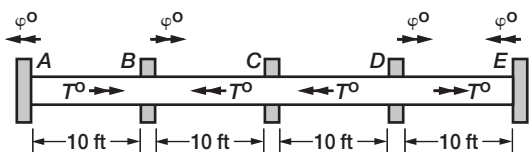

FIGURE P8-6

9 Indeterminate Frame

A frame is made of straight or linear members. An indeterminate frame is obtained by adding extra restraints at the supports of a determinate frame, or by increasing the number of frame members. A frame member carries three internal forces: an axial force (F), a shear force (V), and a bending moment (M); and a node of a frame has three displacements: a translation (u), a transverse displacement (v), and a rotation (θ). A frame member can be formulated by combining the action of the bar and the beam members. The analysis of frame structures is considerably more difficult than that of beam or truss. The complexity is greater because more algebraic equations are required even though the same four types of equations are used—the equilibrium equation, compatibility condition, deformation displacement relation, and force deformation relations. This chapter introduces frame analysis by IFM and the stiffness method by solving an example. The treatment includes mechanical load, thermal load, and support settling.

EXAMPLE 9-1: A Portal Frame with a Mechanical Load

Frame analysis is introduced by considering the portal frame shown in Fig. 9-1*a* as an example. It is made of steel with an elastic modulus E of 30,000 ksi. Its geometrical configuration and member properties (moment of inertia I and area A) are marked in the figure. The frame is subjected to an 18-kip load along the negative y-coordinate direction as shown in Fig. 9-1*a*. Analyze the portal frame for member forces and nodal displacements.

The analysis model has four frame members and five nodes as shown in Fig. 9-1*b*. Each frame member has three force unknowns (F_1, V_1, M_1) as marked for member 1. A node has three displacements (u_3, v_3, θ_3) as shown at node 3. The frame has 12 ($n = 12$) internal forces. It has nine ($m = 9$) displacements because two of its five nodes are fully restrained. It is three-degrees indeterminate ($r = n - m = 3$).

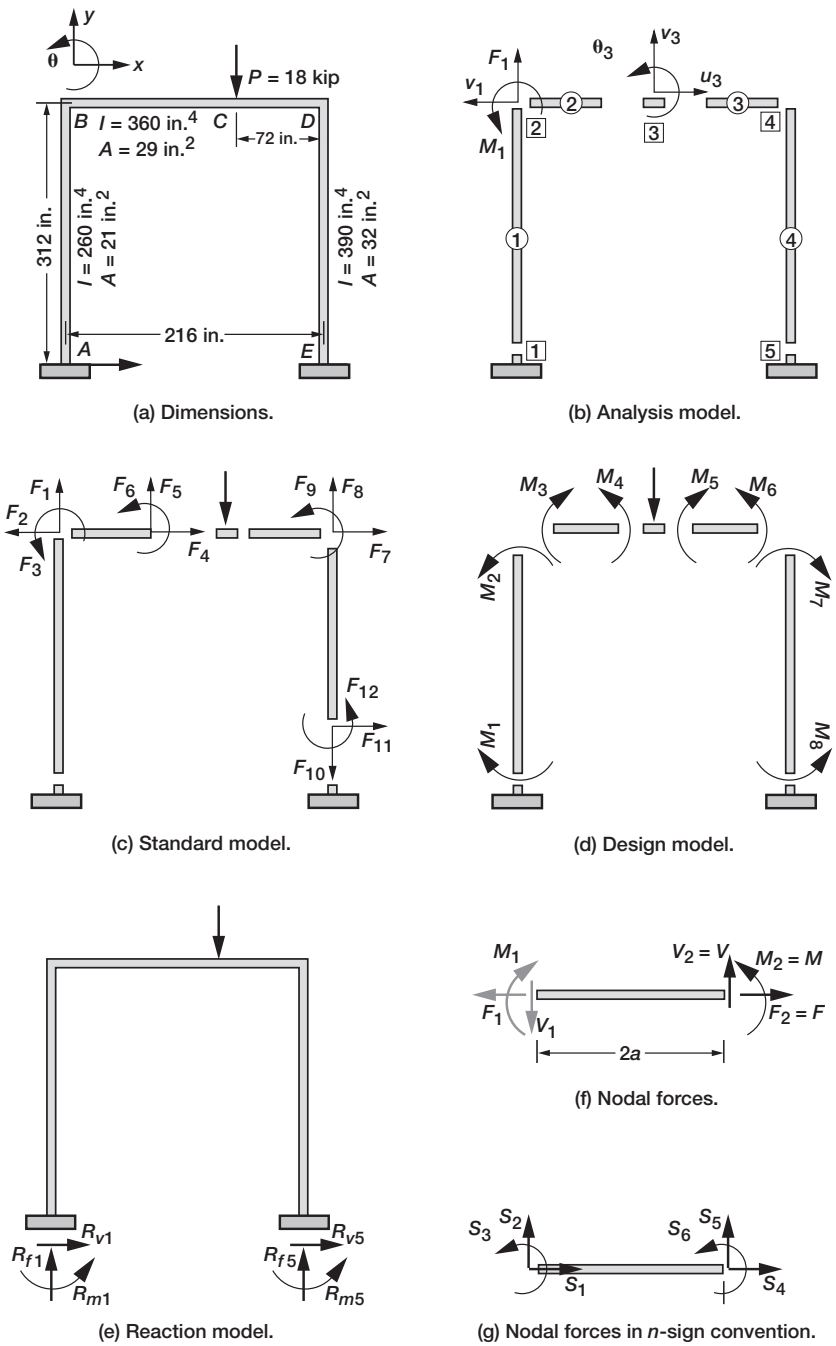

FIGURE 9-1 *Analysis of portal frame.*

9.1 Integrated Force Method for Frame Analysis

The Integrated Force Method solution can use any one of the three force models: the standard model, the design model, or the reaction model.

The **standard model** has 12 unknowns—three forces (F, V, M) for each of the four members. Consider member 1 with nodes 1 and 2. The member axis is along node 1 to 2 and the transverse axis is normal to the member axis. Internal forces are: axial force F_1 along member axis, shear force V_1 along transverse axis, and bending moment M_1 in the member-transverse axes plane in counterclockwise direction. This model, shown in Fig. 9-1*c*, is preferred in computer methods of analysis. It has nine EE and three CC.

The **design model** considers the frame members to be inextensible along their length or member axis, by neglecting the axial deformations. For example, members (columns 1 and 4) cannot contract along the y-coordinate direction, and beams 2 and 3 do not deform along the x-coordinate direction. This model can be analyzed with eight moment unknowns as marked in Fig. 9-1*d*. It has five EE and three CC. This is called the design model because bending moments play a central role in the design of the structure.

The **reaction model** considers the reactions to be the unknowns. The frame has a set of six reactions (R_{f1}, R_{v1}, R_{m1}, and R_{f5}, R_{v5}, R_{m5}) as shown in Fig. 9-1*e*. When reactions are considered as the unknowns, only three system EE can be written. The problem with six unknowns has three EE and three CC. From the reactions, all other response variables can be back-calculated.

The IFM solution is developed first for the standard model and then for the design model. Readers can develop the reaction model by following the steps given for Navier's table problem.

Standard Model

This model requires the formulation of a frame member of length ($\ell = 2a$) with three internal forces consisting of an axial force ($F = F_2$), a shear force ($V = V_2$), and a bending moment ($M = M_2$), as marked in Fig. 9-1*f*. The forces at node 1 are obtained from equilibrium considerations.

The EE along the x-direction yield

$$F_1 = F_2 = F$$

The EE along the y-direction yield

$$V_1 = V_2 = V$$

The rotational EE yield

$$M_1 = M_2 + V_2\ell = M + V\ell$$

The EE at a node has to be written using the n-sign convention. The nodal forces of a frame in the n-convention are marked S_1 to S_6 in Fig. 9-1*g*. By observation of Figs. 9-1*f* and 9-1*g*, we relate the two sets of nodal forces.

$$
\begin{aligned}
S_4 &= F_2 = F \\
S_5 &= V_2 = V \\
S_6 &= M_2 = M \\
S_1 &= F_1 = F \\
S_2 &= -V_1 = -V \\
S_3 &= -M_1 = -(M + V_\ell)
\end{aligned} \tag{9-1a}
$$

In matrix notation, Eq. (9-1a) can be written as

$$
\begin{Bmatrix} S_1 \\ S_2 \\ S_3 \\ S_4 \\ S_5 \\ S_6 \end{Bmatrix} = \begin{bmatrix} -1 & 0 & 0 \\ 0 & -1 & 0 \\ 0 & -\ell & -1 \\ 1 & 0 & 0 \\ 0 & 1 & 0 \\ 0 & 0 & 1 \end{bmatrix} \begin{Bmatrix} F \\ V \\ M \end{Bmatrix} \tag{9-1b}
$$

The frame internal forces are (F, V, M), and these are identical to the forces at node 2 ($F = F_2, V = V_2, M = M_2$). Each frame member has three deformations that correspond to its internal forces: (F, V, M). The axial deformation ($\beta^a = F\ell/AE$) is identical to the bar deformation. The bending moment and shear force are coupled and give rise to a beam-type deformation (β^v and β^m) discussed in Chapter 7. The force deformation relation of a frame member is obtained by adding the axial or truss deformations to flexural or beam deformations. The FDR in matrix notation can be written as

$$
\begin{Bmatrix} \beta_1 = \beta^a \\ \beta_2 = \beta^v \\ \beta_3 = \beta^m \end{Bmatrix} = \begin{bmatrix} \frac{2a}{AE} & 0 & 0 \\ 0 & \frac{(2a)^3}{3EI} & \frac{(2a)^2}{2EI} \\ 0 & \frac{(2a)^2}{2EI} & \frac{(2a)}{EI} \end{bmatrix} \begin{Bmatrix} F \\ V \\ M \end{Bmatrix} \tag{9-2}
$$

In the FDR ($\{\beta\} = [G]\{F\}$) given by Eq. (9-2), the coefficient matrix is the flexibility matrix $[G]$. It is a symmetrical matrix, and its definition requires the member length ($\ell = 2a$), area (A), moment of inertia (I), and modulus of elasticity (E). The axial deformation (β_1) is uncoupled to the flexural deformations (β_2 and β_3).

Procedure for IFM Analysis

At this time, we can obtain the IFM solution by following the seven-step solution strategy: Step 0—Strategy; Step 1—EE; Step 2—DDR; Step 3—CC; Step 4—FDR; Step 5—CC in forces; Step 6—IFM equations; and Step 7—Back-calculations.

Step 0—Solution Strategy

The origin of the coordinate system is selected at node 1. The 12 internal forces $\{F\}$ and 9 nodal displacements $\{X\}$ are as marked in Fig. 9-2*a*.

Step 1—Formulate Equilibrium Equations

The frame has a total of nine equilibrium equations or three EE at each of its three nodes (2, 3, 4). The three EE at node 2, shown in Fig. 9-2*b*, are obtained as the algebraic sum of forces in members 1 and 2 along the displacement directions (X_1, X_2, X_3). It is convenient to write the EE in *S*-forces and then relate such forces to frame internal forces. At node the *S*-forces are from member 1 and member 2. For member 1 these are (S_4^1, S_5^1, S_6^1), the superscript (1) is for member and subscript (4, 5, 6) are the *S*-forces at node 2. Note that the forces at a node are in an opposite direction to that of member end forces. Likewise for member 2, these are (S_1^2, S_2^2, S_3^2) at node 1. The three EE are:

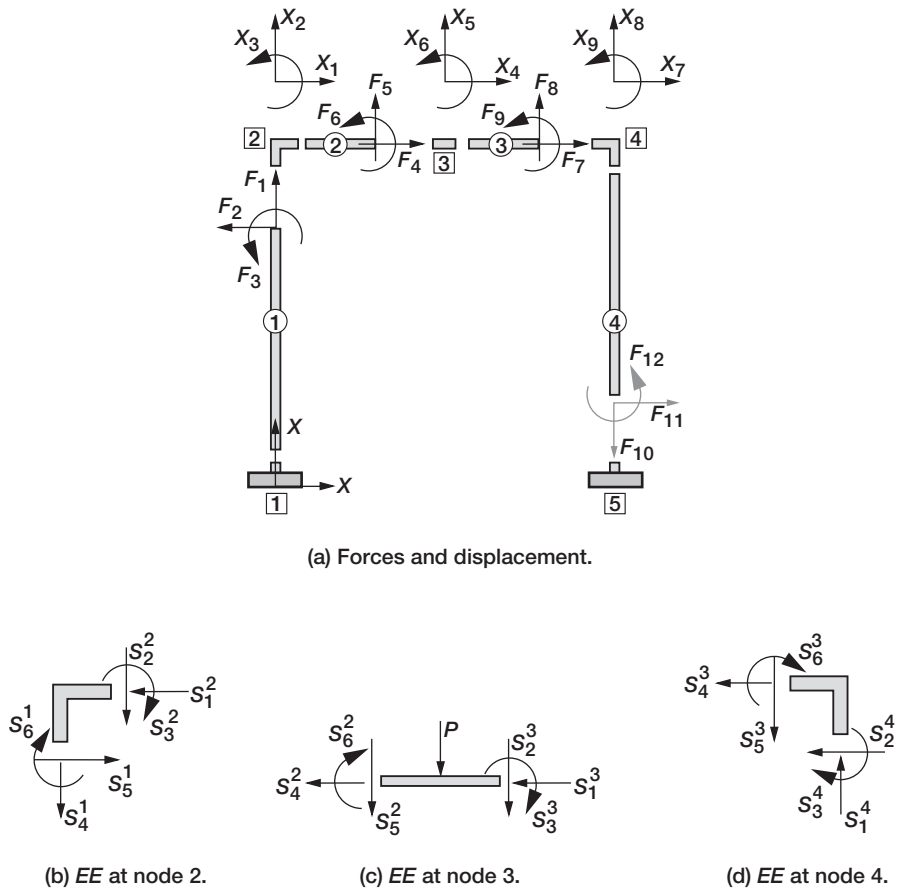

(a) Forces and displacement.

(b) *EE* at node 2.

(c) *EE* at node 3.

(d) *EE* at node 4.

FIGURE 9-2 *Standard IFM model.*

$$S_1^2 - S_5^1 = 0$$

$$S_2^2 + S_4^1 = 0$$

$$S_3^2 + S_6^1 = 0 \tag{9-3a}$$

The EE ($[B]\{F\}=\{P\}$) should be written such that the load vector $\{P\}$ is oriented along the positive coordinate direction (n-sign convention). In the absence of a load, the objective is achieved provided the forces in the EE are balanced along the negative coordinate direction. For example, the first EE in Eq. (9-3a) is written along the negative x-coordinate direction, or negative (X_1) displacement direction. In the EE, the symbol ($S_i^{\,k}$) has a subscript and a superscript. The superscript (k) refers to the number of members. The subscript (i) refers to the direction of the force. In the EE ($S_1^2 - S_5^1 = 0$), the axial force (S_1^2) in member 2 is in equilibrium with the shear force (S_5^1) in member 1, and this EE is written along the negative (X_1) displacement direction.

The EE at node 3 (see Fig. 9-2c) are

$$S_1^3 + S_4^2 = 0$$

$$S_2^3 + S_5^2 = -P$$

$$S_3^3 + S_6^2 = 0 \tag{9-3b}$$

The EE at node 4 (see Fig. 9-2d) are

$$S_4^3 + S_2^4 = 0$$

$$-S_1^4 + S_5^3 = 0$$

$$S_6^3 + S_3^4 = 0 \tag{9-3c}$$

The S forces are linked to the internal forces for the four members using Eq. (9-1b) and Fig. 9-2a.

$$\begin{array}{llll}
S_1^1 = -F_1 & S_1^2 = -F_4 & S_1^3 = -F_7 & S_1^4 = -F_{10} \\
S_2^1 = -F_2 & S_2^2 = -F_5 & S_2^3 = -F_8 & S_2^4 = -F_{11} \\
S_3^1 = -(\ell F_2 + F_3) & S_3^2 = -(\ell F_5 + F_6) & S_3^3 = -(\ell F_8 + F_9) & S_3^4 = -(\ell F_{11} + F_{12}) \\
S_4^1 = F_1 & S_4^2 = F_4 & S_4^3 = F_7 & S_4^4 = F_{10} \\
S_5^1 = F_2 & S_5^2 = F_5 & S_5^3 = F_8 & S_5^4 = F_{11} \\
S_6^1 = F_3 & S_6^2 = F_6 & S_6^3 = F_9 & S_6^4 = F_{12}
\end{array} \tag{9-4}$$

The nine EE in 12 internal force variables can be written as

$$
\begin{aligned}
-F_4 - F_2 &= 0\\
-F_5 + F_1 &= 0\\
F_3 - 144F_5 - F_6 &= 0\\
-F_7 + F_4 &= 0\\
-F_8 + F_5 &= -P = -18\\
-72F_8 - F_9 + F_6 &= 0\\
F_7 - F_{11} &= 0\\
F_8 + F_{10} &= 0\\
F_9 - 312F_{11} - F_{12} &= 0
\end{aligned}
\tag{9-5a}
$$

The nine EE in matrix notation can be written as

$$
\begin{bmatrix}
0 & -1 & 0 & -1 & 0 & 0 & 0 & 0 & 0 & 0 & 0 & 0\\
1 & 0 & 0 & 0 & -1 & 0 & 0 & 0 & 0 & 0 & 0 & 0\\
0 & 0 & 1 & 0 & -144 & -1 & 0 & 0 & 0 & 0 & 0 & 0\\
0 & 0 & 0 & 1 & 0 & 0 & -1 & 0 & 0 & 0 & 0 & 0\\
0 & 0 & 0 & 0 & 1 & 0 & 0 & -1 & 0 & 0 & 0 & 0\\
0 & 0 & 0 & 0 & 0 & 1 & 0 & -72 & -1 & 0 & 0 & 0\\
0 & 0 & 0 & 0 & 0 & 0 & 1 & 0 & 0 & 0 & -1 & 0\\
0 & 0 & 0 & 0 & 0 & 0 & 0 & 1 & 0 & 1 & 0 & 0\\
0 & 0 & 0 & 0 & 0 & 0 & 0 & 0 & 1 & 0 & -312 & -1
\end{bmatrix}
\begin{Bmatrix}
F_1\\ F_2\\ F_3\\ F_4\\ F_5\\ F_6\\ F_7\\ F_8\\ F_9\\ F_{10}\\ F_{11}\\ F_{12}
\end{Bmatrix}
=
\begin{Bmatrix}
0\\ 0\\ 0\\ 0\\ -18\\ 0\\ 0\\ 0\\ 0
\end{Bmatrix}
\tag{9-5b}
$$

Step 2—Derive the Deformation Displacement Relations

The DDR ($\{\beta\} = [B]^T\{X\}$) are as follows:

$$
\begin{aligned}
\beta_1 &= X_2\\
\beta_2 &= -X_1\\
\beta_3 &= X_3\\
\beta_4 &= -X_1 + X_4\\
\beta_5 &= -X_2 - 144X_3 + X_5\\
\beta_6 &= -X_3 + X_6\\
\beta_7 &= -X_4 + X_7\\
\beta_8 &= -X_5 - 72X_6 + X_8\\
\beta_9 &= -X_6 + X_9\\
\beta_{10} &= X_8\\
\beta_{11} &= -X_7 - 312X_9\\
\beta_{12} &= -X_9
\end{aligned}
\tag{9-6}
$$

In the DDR, the 12 deformations $\{\beta\}$ correspond to the 12 internal forces $\{F\}$, and $\{X\}$ is the 9-component nodal displacement vector.

Step 3—Generate the Compatibility Conditions

The 9 displacements are eliminated from the 12 DDR to obtain the 3 compatibility conditions.

$$\beta_1 + 216\beta_3 + \beta_5 + 72\beta_6 + \beta_8 - \beta_{10} = 0 \tag{9-7a}$$

$$\beta_3 + \beta_6 + \beta_9 + \beta_{12} = 0 \tag{9-7b}$$

$$-\beta_2 + \beta_4 + \beta_7 + \beta_{11} - 312\beta_{12} = 0 \tag{9-7c}$$

The second CC given by Eq. (9-7*b*) constrains four flexural deformations ($\beta_3, \beta_6, \beta_9, \beta_{12}$) in the four frame members to zero. The first CC given by Eq. (9-7*a*) constrains the deformation components of all four members: the flexural deformations (β_3 of member 1 and β_6 of member 2), axial deformations (β_1 of member 1 and β_{10} of member 4), and transverse deformations (β_5 of member 2 and β_8 of member 3). The CC given by Eq. (9-7*c*) is similar to Eq. (9-7*a*) with some variation. The (3×12)-compatibility matrix $[C]$ has the following form:

$$[C] = \begin{bmatrix} 1 & 0 & 216 & 0 & 1 & 72 & 0 & 1 & 0 & -1 & 0 & 0 \\ 0 & 0 & 1 & 0 & 0 & 1 & 0 & 0 & 1 & 0 & 0 & 1 \\ 0 & -1 & 0 & 1 & 0 & 0 & 1 & 0 & 0 & 0 & 1 & -312 \end{bmatrix} \tag{9-7d}$$

The reader can verify that the product $([B][C]^T)$ is a 9×3 null matrix.

Step 4—Formulate the Force Deformation Relations

The four flexibility matrices (G_1, G_2, G_3, G_4) for the four members in the FDR ($\{\beta\} = [G]\{F\}$) are

$$G_1 = \frac{1}{E}\begin{bmatrix} 14.86 & 0 & 0 \\ 0 & 3.89 \times 10^4 & 1.87 \times 10^2 \\ 0 & 1.87 \times 10^2 & 1.20 \end{bmatrix} \tag{9-8a}$$

$$G_2 = \frac{1}{E}\begin{bmatrix} 4.97 & 0 & 0 \\ 0 & 2.76 \times 10^3 & 28.8 \\ 0 & 28.8 & 0.40 \end{bmatrix} \tag{9-8b}$$

$$G_2 = \frac{1}{E}\begin{bmatrix} 2.48 & 0 & 0 \\ 0 & 3.46 \times 10^2 & 7.2 \\ 0 & 7.2 & 0.2 \end{bmatrix} \tag{9-8c}$$

$$G_4 = \frac{1}{E}\begin{bmatrix} 9.75 & 0 & 0 \\ 0 & 2.6 \times 10^4 & 1.25 \times 10^2 \\ 0 & 1.25 \times 10^2 & 0.8 \end{bmatrix} \tag{9-8d}$$

The system flexibility matrix $[G]$ is the diagonal concatenation of the four matrices (G_1, G_2, G_3, G_4).

Step 5—Express the CC in Forces

The CC are expressed in forces by eliminating the deformations in favor of forces. The 3×12 matrix ($[C][G]$) has the following form:

$$[C][G] = \frac{1}{E}\begin{bmatrix} 14.86 & 4.0\times10^4 & 259.2 & 0 & 4.83\times10^3 & 57.6 & 0 & 346 & 7.2 & -9.75 & 0 & 0 \\ 0 & 187.2 & 1.20 & 0 & 28.8 & 0.4 & 0 & 7.2 & 0.2 & 0 & 1.25\times10^2 & 0.8 \\ 0 & -3.89\times10^4 & -187.2 & 4.97 & 0 & 0 & 2.48 & 0 & 0 & 0 & -1.3\times10^4 & -124.8 \end{bmatrix} \tag{9-9}$$

Step 6—Couple the 9 Equilibrium Equations and the 3 Compatibility Conditions to Obtain the 12 IFM Equations in 12 Forces

$$\begin{bmatrix} 0 & -1 & 0 & -1 & 0 & 0 & 0 & 0 & 0 & 0 & 0 & 0 \\ 1 & 0 & 0 & 0 & -1 & 0 & 0 & 0 & 0 & 0 & 0 & 0 \\ 0 & 0 & 1 & 0 & -144 & -1 & 0 & 0 & 0 & 0 & 0 & 0 \\ 0 & 0 & 0 & 1 & 0 & 0 & -1 & 0 & 0 & 0 & 0 & 0 \\ 0 & 0 & 0 & 0 & 1 & 0 & 0 & -1 & 0 & 0 & 0 & 0 \\ 0 & 0 & 0 & 0 & 0 & 1 & -72 & 0 & -1 & 0 & 0 & 0 \\ 0 & 0 & 0 & 0 & 0 & 0 & 1 & 0 & 0 & 0 & -1 & 0 \\ 0 & 0 & 0 & 0 & 0 & 0 & 0 & 1 & 0 & 1 & 0 & 0 \\ 0 & 0 & 0 & 0 & 0 & 0 & 0 & 0 & 1 & 0 & -312 & -1 \\ 14.86 & 4.04\times10^4 & 259.2 & 0 & 4.83\times10^3 & 57.6 & 0 & 3.46 & 7.2 & -9.75 & 0 & 0 \\ 0 & 187.2 & 1.2 & 0 & 28.8 & 0.4 & 0 & 7.20 & 0.2 & 0 & 125 & 0.8 \\ 0 & -3.89\times10^4 & -187.2 & 4.97 & 0 & 0 & 2.48 & 0.0 & 0.0 & 0 & -1.3\times10^4 & -124.8 \end{bmatrix} \begin{Bmatrix} F_1 \\ F_2 \\ F_3 \\ F_4 \\ F_5 \\ F_6 \\ F_7 \\ F_8 \\ F_9 \\ F_{10} \\ F_{11} \\ F_{12} \end{Bmatrix} = \begin{Bmatrix} 0 \\ 0 \\ 0 \\ 0 \\ -18 \\ 0 \\ 0 \\ 0 \\ 0 \\ 0 \\ 0 \\ 0 \end{Bmatrix} \tag{9-10}$$

Solving Eq. (9-10) yields the 12 for as

$$\begin{Bmatrix} F_1 \\ F_2 \\ F_3 \\ F_4 \\ F_5 \\ F_6 \\ F_7 \\ F_8 \\ F_9 \\ F_{10} \\ F_{11} \\ F_{12} \end{Bmatrix} = \begin{Bmatrix} -5.77 \\ 1.12 \\ -213.39\,\text{in.} \\ -1.12 \\ -5.77 \\ 618.04\,\text{in.} \\ -1.12 \\ 12.23 \\ -262.25\,\text{in.} \\ -12.23 \\ -1.12 \\ 87.11\,\text{in.} \end{Bmatrix}\text{kip} \tag{9-11}$$

Reactions at node 1 and node 5 are back-calculated from the internal forces. The free-body diagrams at support nodes 1 and 2 are shown in Figs. 9-3*a* and 9-3*b*, respectively. In the free-body diagram, the *x*- and *y*-axes of members 1 and 4 are shown, along with the *S*-forces and reactions. The reactions are obtained as for the EE at nodes 1 and 5. Remember that at the node the *S*-forces change orientations. The reactions are as follows.

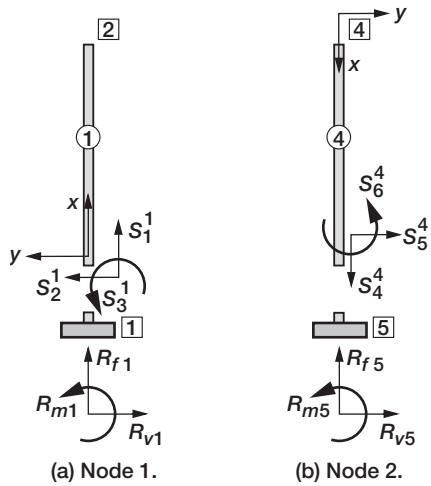

FIGURE 9-3 *Free-body diagram to calculate reactions.*

$$
\begin{aligned}
R_{x1} &= R_{v1} = -S_2^1 = F_2 = 1.12\,\text{kip} \\
R_{y1} &= R_{f1} = -S_1^1 = F_1 = 5.77\,\text{kip} \\
R_{m1} &= -S_3^1 = (\ell F_2 + F_3) = -136\,\text{in.-k} \\
R_{x5} &= R_{v5} = -S_5^4 = F_{11} = -1.12\,\text{kip} \\
R_{y5} &= R_{f5} = -S_4^4 = -F_{10} = 12.23\,\text{kip} \\
R_{m5} &= S_6^4 = F_{12} = 87.11\text{in.-k}
\end{aligned} \tag{9-12}
$$

Step 7—Back-Calculate Displacements Using the Deformation Displacement Relations

Displacements from the DDR are as follows:

$$
\begin{aligned}
\text{Node 2:}\quad & X_1 = -\beta_2 = \frac{1}{E}\left(3.89 \times 10^4 F_2 + 1.87 \times 10^2 F_3\right) = -0.122\,\text{in.} \\
& X_2 = \beta_1 = \frac{14.86 F_1}{E} = -0.003\,\text{in.} \\
& X_3 = \beta_3 = \frac{1}{E}(187 F_2 + 1.2 F_3) = -0.0016\,\text{rad} \\
\text{Node 3:}\quad & X_4 = \beta_4 - \beta_2 = -0.122\,\text{in.} \\
& X_5 = \beta_5 + \beta_1 + 144\beta_4 = -0.164\,\text{in.} \\
& X_6 = \beta_3 + \beta_6 = \quad = 0.0011\,\text{rad} \\
\text{Node 4:}\quad & X_7 = \beta_4 + \beta_7 - \beta_2 = -0.122\,\text{in.} \\
& X_8 = \beta_{10} = -0.004\,\text{in.} \\
& X_9 = -\beta_{12} = 0.0023\,\text{rad}
\end{aligned} \tag{9-13}
$$

Design Model

The seven-step procedure is also followed to generate a solution with moments as the force variables.

Procedure for Analysis

Step 0—Solution Strategy

The portal frame has a total of eight moment unknowns (M_1, M_2, ..., M_8), or $n = 8$. For simplicity, the five displacement unknowns ($m = 5$) considered are

1. Displacement X_s, representing the sway of the portal frame, as shown in Fig. 9-4*a*
2. Three rotations ($\theta_B = \theta_2$, $\theta_C = \theta_3$, $\theta_D = \theta_4$) at three node locations (*B* or 2, *C* or 3, *D* or 4), respectively
3. Transverse displacement X_c at the load application point at node 3

The problem is three-degrees indeterminate ($r = n - m = 3$). For this analysis, only bending deformation is considered. The axial deformation is neglected.

Step 1—Formulate the Equilibrium Equations

The free-body diagram shown in Fig. 9-4*b* is sufficient to write the EE for the problem. The five EE along the five displacement degrees of freedom can be written as follows:

1. Along the sway X_s direction: The displacement along the *x*-direction at the top of the frame or along the beam *BCD* is referred to as the sway displacement X_s. The force equilibrium along the sway direction for the beam *BCD* yields the following EE:

$$-\left(\frac{M_1 - M_2}{\ell_1} - \frac{M_8 - M_7}{\ell_4}\right) = 0 \tag{9-14a}$$

2. Along the rotation θ_2 direction at node 2:

$$M_2 - M_3 = 0 \tag{9-14b}$$

3. Along the rotation θ_3 direction at node 3:

$$M_4 - M_5 = 0 \tag{9-14c}$$

4. Along the rotation θ_4 direction at node 4:

$$M_6 - M_7 = 0 \tag{9-14d}$$

5. Along the transverse displacement X_C direction at node 3:

$$-\left(\frac{M_3 - M_4}{\ell_2} + \frac{M_6 - M_5}{\ell_3} + P\right) = 0 \tag{9-14e}$$

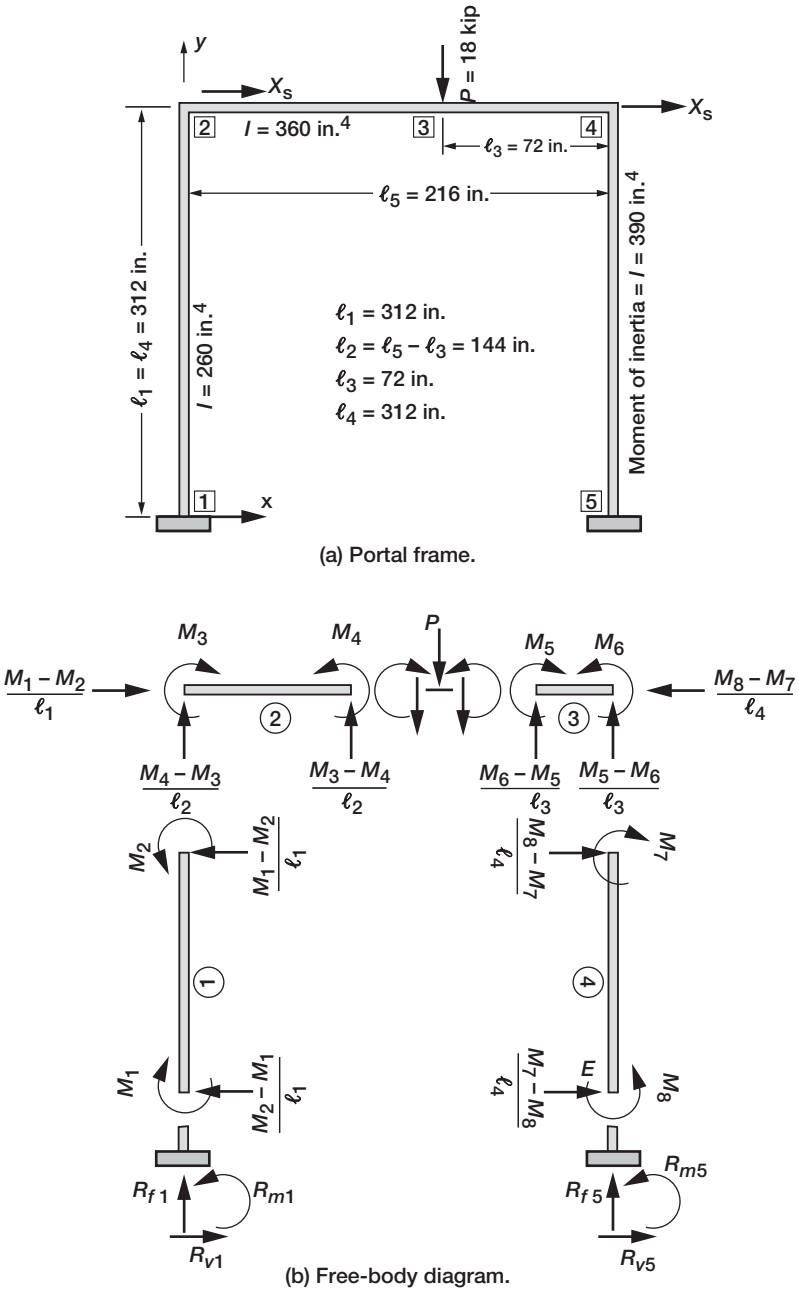

FIGURE 9-4 *Standard IFM model.*

The EE are simplified by eliminating the length parameters ($\ell_1 = \ell_4$ and $\ell_2 = 2\ell_3$). The process makes the EE dimensionless, and the load term (P_5) becomes an equivalent moment of 2592.0 in.-k. The five EE can be written in matrix notation as

$$\begin{bmatrix} -1 & 1 & 0 & 0 & 0 & 0 & -1 & 1 \\ 0 & 1 & -1 & 0 & 0 & 0 & 0 & 0 \\ 0 & 0 & 0 & 1 & -1 & 0 & 0 & 0 \\ 0 & 0 & 0 & 0 & 0 & 1 & -1 & 0 \\ 0 & 0 & 1 & -1 & -2 & 2 & 0 & 0 \end{bmatrix} \begin{Bmatrix} M_1 \\ M_2 \\ M_3 \\ M_4 \\ M_5 \\ M_6 \\ M_7 \\ M_8 \end{Bmatrix} = \begin{Bmatrix} 0 \\ 0 \\ 0 \\ 0 \\ -2592 \end{Bmatrix} \tag{9-15}$$

Since five EE are expressed in terms of eight unknown forces, three CC are required for their determination.

Step 2—Derive the Deformation Displacement Relations

The eight DDR for the problem are as follows:

$$\begin{aligned} \beta_1 &= \frac{-X_s}{\ell_1} & \beta_5 &= -\theta_C + \frac{2X_C}{\ell_3} \\ \beta_2 &= \frac{-X_s}{\ell} + \theta_B & \beta_6 &= \theta_D - \frac{2X_C}{\ell_3} \\ \beta_3 &= -\theta_B - \frac{X_C}{\ell_2} & \beta_7 &= \frac{-X_s}{\ell_4} - \theta_D \\ \beta_4 &= \theta_C + \frac{X_C}{\ell_2} & \beta_8 &= \frac{-X_s}{\ell_4} \end{aligned} \tag{9-16}$$

In the DDR, the eight deformations ($\beta_1, \beta_2, \ldots, \beta_8$) correspond to the eight moments ($M_1, M_2, \ldots, M_8$), respectively. The dual displacement variables of the five EE are X_s, θ_2, θ_3, θ_4, and X_C.

Step 3—Generate the Compatibility Conditions

The five displacements are eliminated from the eight DDR to obtain three CC:

$$\begin{bmatrix} 1 & 1 & 1 & 1/3 & 1/3 & 0 & 0 & 0 \\ -1 & 0 & 0 & 2/3 & 2/3 & 1 & 1 & 0 \\ 1 & 0 & 0 & 0 & 0 & 0 & 0 & 1 \end{bmatrix} \begin{bmatrix} \beta_1 \\ \beta_2 \\ \beta_3 \\ \beta_4 \\ \beta_5 \\ \beta_6 \\ \beta_7 \\ \beta_8 \end{bmatrix} = \begin{Bmatrix} 0 \\ 0 \\ 0 \end{Bmatrix} \tag{9-17}$$

The null property ($[B][C]^T = 0$) of the equilibrium and compatibility matrices can be verified as

$$\begin{bmatrix} -1 & 1 & 0 & 0 & 0 & 0 & -1 & 1 \\ 0 & 1 & -1 & 0 & 0 & 0 & 0 & 0 \\ 0 & 0 & 0 & 1 & -1 & 0 & 0 & 0 \\ 0 & 0 & 0 & 0 & 0 & 1 & -1 & 0 \\ 0 & 0 & 1 & -1 & -2 & 2 & 0 & 0 \end{bmatrix} \begin{bmatrix} 1 & -1 & 1 \\ 1 & 0 & 0 \\ 1 & 0 & 0 \\ 1/3 & 2/3 & 0 \\ 1/3 & 2/3 & 0 \\ 0 & 1 & 0 \\ 0 & 1 & 0 \\ 0 & 0 & 1 \end{bmatrix} = \begin{bmatrix} 0 & 0 & 0 \\ 0 & 0 & 0 \\ 0 & 0 & 0 \\ 0 & 0 & 0 \\ 0 & 0 & 0 \end{bmatrix} \tag{9-18}$$

Step 4—Formulate the Force Deformation Relation

The FDR for a uniform beam of span ℓ, subjected to end moments M_i and M_j, and the corresponding deformations β_i and β_j can be written as

$$\begin{Bmatrix} \beta_i \\ \beta_j \end{Bmatrix} = \left(\frac{\ell}{6EI}\right) \begin{bmatrix} 2 & 1 \\ 1 & 2 \end{bmatrix} \begin{Bmatrix} M_i \\ M_j \end{Bmatrix} \tag{9-19a}$$

The FDR can be specialized for the four beam elements of the problem as

$$\begin{aligned} \beta_1 &= \frac{1}{6E}(2.4M_1 + 1.2M_2) & \beta_5 &= \frac{1}{6E}(0.4M_5 + 0.2M_6) \\ \beta_2 &= \frac{1}{6E}(1.2M_1 + 2.4M_2) & \beta_6 &= \frac{1}{6E}(0.2M_5 + 0.4M_6) \\ \beta_3 &= \frac{1}{6E}(0.8M_3 + 0.4M_4) & \beta_7 &= \frac{1}{6E}(1.6M_7 + 0.8M_8) \\ \beta_4 &= \frac{1}{6E}(0.4M_3 + 0.8M_4) & \beta_8 &= \frac{1}{6E}(0.8M_7 + 1.6M_8) \end{aligned} \tag{9-19b}$$

Step 5—Express the Compatibility Conditions in Terms of Forces

The CC can be expressed in moments by eliminating deformations between the CC and the FDR:

$$\left(\frac{1}{6E}\right)\begin{bmatrix} 3.600 & 3.600 & 0.933 & 0.667 & 0.133 & 0.067 & 0.000 & 0.000 \\ -2.400 & -1.200 & 0.267 & 0.533 & 0.467 & 0.533 & 1.600 & 0.800 \\ 2.400 & 1.200 & 0.000 & 0.000 & 0.000 & 0.000 & 0.800 & 1.600 \end{bmatrix}\begin{Bmatrix} M_1 \\ M_2 \\ M_3 \\ M_4 \\ M_5 \\ M_6 \\ M_7 \\ M_8 \end{Bmatrix} = \begin{Bmatrix} 0 \\ 0 \\ 0 \end{Bmatrix} \tag{9-20}$$

Step 6—Couple the Equilibrium Equations and Compatibility Conditions to Obtain the IFM Equations, and Solve for Forces

$$\begin{bmatrix} -1 & 1 & 0 & 0 & 0 & 0 & -1 & 1 \\ 0 & 1 & -1 & 0 & 0 & 0 & 0 & 0 \\ 0 & 0 & 0 & 1 & -1 & 0 & 0 & 0 \\ 0 & 0 & 0 & 0 & 0 & 1 & -1 & 0 \\ 0 & 0 & 1 & -1 & -2 & 2 & 0 & 0 \\ 3.600 & 3.600 & 0.933 & 0.667 & 0.133 & 0.067 & 0.000 & 0.000 \\ -2.400 & -1.200 & 0.267 & 0.533 & 0.467 & 0.533 & 1.600 & 0.800 \\ 2.400 & 1.200 & 0.000 & 0.000 & 0.000 & 0.000 & 0.800 & 1.600 \end{bmatrix}\begin{Bmatrix} M_1 \\ M_2 \\ M_3 \\ M_4 \\ M_5 \\ M_6 \\ M_7 \\ M_8 \end{Bmatrix} = \begin{Bmatrix} 0 \\ 0 \\ 0 \\ 0 \\ -2592 \\ 0 \\ 0 \\ 0 \end{Bmatrix} \tag{9-21a}$$

Solving the IFM equation yields the moments as

$$\begin{Bmatrix} M_1 \\ M_2 \\ M_3 \\ M_4 \\ M_5 \\ M_6 \\ M_7 \\ M_8 \end{Bmatrix} = \begin{Bmatrix} 136.1 \\ -213.3 \\ -213.3 \\ 617.9 \\ 617.9 \\ -262.4 \\ -262.4 \\ 87.0 \end{Bmatrix} \tag{9-21b}$$

Reactions can be back-calculated as follows:

Horizontal reactions (see Fig. 9-4*b*):

At support node 1, the reaction R_{v1} is

$$R_{v1} = -\frac{M_2 - M_1}{\ell_1} = 1.12\,\text{kip} \tag{9-21c}$$

At support node 5, the reaction R_{v5} is

$$R_{v5} = \frac{M_7 - M_8}{\ell_4} = -1.12\,\text{kip} \tag{9-21d}$$

Vertical reactions:
At support node 1, the vertical reaction R_{f1} is

$$R_{f1} = \frac{M_4 - M_3}{\ell_2} = 5.77\,\text{kip} \tag{9-21e}$$

At support node 5, the vertical reaction R_{f5} becomes

$$R_{f5} = \frac{M_5 - M_6}{\ell_3} = 12.23\,\text{kip} \tag{9-21f}$$

At support node 1, the reactive moment is

$$R_{m1} = -M_1 = -136.1\text{in.-k}$$

At support node 5, the reactive moment is

$$R_{m5} = M_8 = 87.0 \text{ in.-k}$$

The reactions satisfy the overall equilibrium equations. The EE along the sway direction is satisfied ($R_{v1} + R_{v5} = 0$). EE along the transverse direction is satisfied ($R_{f1} + R_{f5} = P = 18$). The moment EE (about A) is also satisfied ($-144 \times 18 - 216R_{51} + R_{m1} + R_{m5} = 0$).

Step 7—Back-Calculate the Displacement, if Required, from the Deformation Displacement Relations

The displacement at the load P application point along the y-coordinate direction is

$$X_C = \ell_2(\beta_1 + \beta_2 + \beta_3)$$

or

$$X_c = \frac{144}{6E}(3.6M_1 + 3.6M_2 + 0.8M_3 + 0.4M_4) = -0.161\,\text{in.} \tag{9-21g}$$

The sway displacement is

$$X_s = -\beta_1\ell_1 = -\frac{312}{6E}(2.4M_1 + 1.2M_2) = -0.122\,\text{in.} \tag{9-21h}$$

The response obtained by the design model is quite close to that of the standard. The response fidelity of the design model is sufficient for design calculation.

9.2 Stiffness Method Solution for the Frame

The governing equations of stiffness method is obtained by expressing, the nine EE given by Eqs. (9-3*a*) to (9-3*c*) in terms of the nine nodal displacements (X_1 to X_9). The solution to these nine stiffness equations yields the nine displacements. The member forces and reactions are back-calculated. The *S*-forces in Eq. (9-3) are expressed in terms of the nodal displacement variables using the stiffness equations of a frame member. The stiffness equations are obtained by combining the responses of truss and beam members.

The six displacements of a frame member are marked in Fig. 9-5*a*. At node 1, the three displacements are $u_1 = X_1$, $v_1 = X_2$, and $\theta_1 = X_3$; at node 2, these are $u_2 = X_4$, $v_2 = X_5$, and $\theta_2 = X_6$. At node 1, the forces are S_1, S_2, and S_3; at node 2, these are S_4, S_5, and S_6, as shown in Fig. 9-5*b*. The axial forces are S_1 and S_6, the shear forces are S_2 and S_5, and the moments are S_3 and S_6. The displacements $\{X\}$ and *S*-forces follow the *n*-sign convention. The stiffness equation is the relationship between the *S*-forces and nodal displacements. For a frame member subjected to a distributed load of intensity (p) acting along the y-coordinate axis, temperature variation (ΔT) along the depth and length (ΔT^a), the stiffness equation is obtained by adding the truss and beam responses. For a frame member the stiffness equation follows.

$$\begin{Bmatrix} S_1 \\ S_2 \\ S_3 \\ S_4 \\ S_5 \\ S_6 \end{Bmatrix} = \left(\frac{E}{2a}\right) \begin{bmatrix} A & 0 & 0 & -A & 0 & 0 \\ 0 & \frac{3I}{a^2} & \frac{3I}{a} & 0 & -\frac{3I}{a^2} & \frac{3I}{a} \\ 0 & \frac{3I}{a} & 4I & 0 & -\frac{3I}{a} & 2I \\ -A & 0 & 0 & A & 0 & 0 \\ 0 & -\frac{3I}{a^2} & -\frac{3I}{a} & 0 & \frac{3I}{a^2} & -\frac{3I}{a} \\ 0 & \frac{3I}{a} & 2I & 0 & -\frac{3I}{a} & 4I \end{bmatrix} \begin{Bmatrix} X_1 \\ X_2 \\ X_3 \\ X_4 \\ X_5 \\ X_6 \end{Bmatrix} + E\alpha \begin{Bmatrix} A\Delta T^a \\ 0 \\ \frac{-I\Delta T}{h} \\ -A\Delta T^a \\ 0 \\ \frac{I\Delta T}{h} \end{Bmatrix} + p \begin{Bmatrix} 0 \\ a \\ -\frac{a^2}{3} \\ 0 \\ a \\ \frac{a^3}{3} \end{Bmatrix} \tag{9-22}$$

where

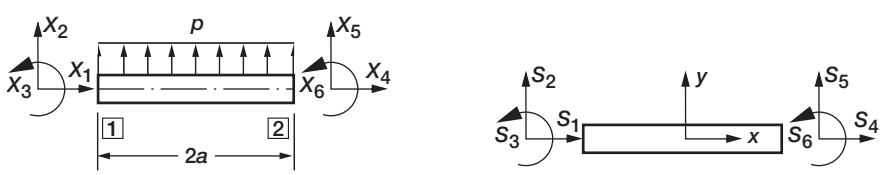

(a) Six displacements (X_1 to X_6). (b) Six forces (S_1 to S_6).

FIGURE 9-5 *Stiffness model for a frame member.*

$2a$ length of frame member

h depth

A area

I moment of inertia

E Young's modulus

α coefficient of thermal expansion

ΔT^a temperature variation along length

ΔT temperature variation along length depth

p distributed load directed along the positive y-coordinate direction.

The stiffness equations are specialized next for each member of the portal frame.

Member 1 (Connecting Nodes 1 and 2)

Member 1 is fully restrained at node 1; at node 2 the displacements are ${X_4}^1 = X_2$, ${X_5}^1 = -X_1$, and ${X_6}^1 = X_3$, as marked in Fig. 9-2a. In advanced analysis methods, the process of linking the displacements of member 1 $({X_4}^1, {X_5}^1, {X_6}^1)$ to those of the frame $(X_1,\ X_2,\ X_3)$ is handled through a coordinate transformation technique. For the portal frame, the linking is achieved by observation. The stiffness equations for member 1 are obtained from Eq. (9-22) for $2a = 312$ in., $A = 21$ in.^{2}, $I = 260$ in.^{4}, $E = 30{,}000$ ksi, $p = 0$, and $\Delta T^a = \Delta T = 0$.

$$\begin{Bmatrix} S_1^1 \\ S_2^1 \\ S_3^1 \\ S_4^1 \\ S_5^1 \\ S_6^1 \end{Bmatrix} = \frac{E}{312} \begin{bmatrix} -21.0 & 0 & 0 \\ 0 & -0.0321 & 5.0 \\ 0 & -5.0 & 520.0 \\ 21.0 & 0 & 0 \\ 0 & 0.0321 & -5.0 \\ 0 & -5.0 & 1040.0 \end{bmatrix} \begin{Bmatrix} X_2 \\ -X_1 \\ X_3 \end{Bmatrix} \tag{9-23a}$$

The stiffness Eq. (9-23a) of member 1 links the six nodal forces to three displacements at node 2.

Member 2 (Connecting Nodes 2 and 3)

At node 2, the displacements are X_1, X_2, and X_3; at node 3, these are X_4, X_5, and X_6. The stiffness equations for member 2 are obtained from Eq. (9-22) for $2a = 144$ in., $A = 29$ in.^{2}, $I = 360$ in.^{4}, $E = 30{,}000$ ksi, $p = 0$ and $\Delta T^a = \Delta T = 0$.

$$\begin{Bmatrix} S_1^2 \\ S_2^2 \\ S_3^2 \\ S_4^2 \\ S_5^2 \\ S_6^2 \end{Bmatrix} = \frac{E}{144} \begin{bmatrix} 29.0 & 0 & 0 & -29.0 & 0 & 0 \\ 0 & 0.208 & 15.0 & 0 & -0.208 & 15.0 \\ 0 & 15.0 & 1440.0 & 0 & -15.0 & 720.0 \\ -29.0 & 0 & 0 & 29.0 & 0 & 0 \\ 0 & -0.208 & -15.0 & 0 & 0.208 & -15.0 \\ 0 & 15.0 & 720.0 & 0 & -15.0 & 1440.0 \end{bmatrix} \begin{Bmatrix} X_1 \\ X_2 \\ X_3 \\ X_4 \\ X_5 \\ X_6 \end{Bmatrix} \tag{9-23b}$$

The stiffness Eq. (9-23*b*) of member 2 links the six nodal forces to six displacements.

Member 3 (Connecting Nodes 3 and 4)

At node 3, the displacements are X_4, X_5, and X_6; at node 4, they are X_7, X_8, and X_9. The stiffness equations for member 3 are obtained from Eq. (9-22) for $2a = 72\,\text{in.}$, $A = 29\,\text{in.}^2$, $I = 360\,\text{in.}^4$, $E = 30{,}000\,\text{ksi}$, $p = 0$, and $\Delta T^a = \Delta T = 0$.

$$\begin{Bmatrix} S_1^3 \\ S_2^3 \\ S_3^3 \\ S_4^3 \\ S_5^3 \\ S_6^3 \end{Bmatrix} = \left(\frac{E}{72}\right) \begin{bmatrix} 29.0 & 0 & 0 & -29.0 & 0 & 0 \\ 0 & 0.833 & 30.0 & 0 & -0.833 & 30.0 \\ 0 & 30.0 & 1440.0 & 0 & -30.0 & 720.0 \\ -29.0 & 0 & 0 & 29.0 & 0 & 0 \\ 0 & -0.833 & -30.0 & 0 & 0.833 & -30.0 \\ 0 & 30.0 & 720.0 & 0 & -30.0 & 1440.0 \end{bmatrix} \begin{Bmatrix} X_4 \\ X_5 \\ X_6 \\ X_7 \\ X_8 \\ X_9 \end{Bmatrix} \tag{9-23c}$$

The stiffness Eq. (9-23*c*) of member 3 links the six nodal forces to six displacements.

Member 4 (Connecting Nodes 4 and 5)

At node 4, the displacements are $X_1^4 = -X_8$, $X_2^4 = X_7$, and $X_3^4 = X_9$, as marked in Fig. 9-2*a* (X_7, X_8, X_9); at node 5, member 4 is fully restrained. Its stiffness equations are obtained from Eq. (9-22) for $2a = 312\,\text{in.}$, $A = 32\,\text{in.}^2$, $I = 390\,\text{in.}^4$, $E = 30{,}000\,\text{ksi}$, $p = 0$, and $\Delta T^a = \Delta T = 0$.

$$\begin{Bmatrix} S_1^4 \\ S_2^4 \\ S_3^4 \\ S_4^4 \\ S_5^4 \\ S_6^4 \end{Bmatrix} = \left(\frac{E}{312}\right) \begin{bmatrix} 32.0 & 0 & 0 \\ 0 & 0.048 & 7.50 \\ 0 & 7.50 & 1560.0 \\ -32.0 & 0 & 0 \\ 0 & -0.048 & -7.50 \\ 0 & 7.50 & 780.0 \end{bmatrix} \begin{Bmatrix} -X_8 \\ X_7 \\ X_9 \end{Bmatrix} \tag{9-23d}$$

The stiffness Eq. (9-23*d*) of member 4 links the six nodal forces to three displacements at node 4.

The nine EE given by Eqs. (9-3*a*) to (9-3*c*) are expressed in terms of the displacements using Eq. (9-23) to obtain nine stiffness equations in nine nodal displacements. Three equations are obtained at each of the three nodes (2, 3, 4). The equations at node 2 are

Stiffness equation 1:

$$S_1{}^2 - S_5{}^1 \text{ (Eq. 9-3}a\text{) becomes}$$

$$\frac{E}{144}(29.0X_1 - 29.0X_4) - \frac{E}{312}(-0.0321X_1 - 5.0X_3) = 0$$

or

$$3 \times 10^3(2014.92X_1 + 160.26X_3 - 2013.89X_4) = 0 \tag{9-24a}$$

Stiffness equation 2:

$$S_2{}^2 + S_4{}^1 \text{ (Eq. 9-3}b\text{) becomes}$$

$$\frac{E}{144}(0.208X_2 + 15.0X_3 - 0.208X_5 + 15.0X_6) + \frac{E}{312}(21.0X_2)$$

or

$$3 \times 10^3(687.55X_2 + 1041.67X_3 - 14.47X_5 + 1041.67X_6) = 0 \tag{9-24b}$$

Stiffness equation 3:

$$S_3{}^2 + S_6{}^1 \text{ (Eq. 9-3}c\text{) becomes}$$

$$\frac{E}{144}(15.0X_2 + 1440.0X_3 - 15.0X_5 + 720.0X_6) + \frac{E}{312}(5.0X_1 + 1040.0X_3) = 0$$

or

$$3 \times 10^3\left(160.26X_1 + 1041.67X_2 + 1.33 \times 10^5X_3 - 1041.67X_5 + 5 \times 10^4X_6\right) = 0 \tag{9-24c}$$

Likewise, six more stiffness equations are obtained at nodes 3 and 4. The nine equations in matrix notation are as follows:

$$3\times10^4 \begin{bmatrix} 201.49 & 0.0 & 16.03 & -201.39 & 0.0 & 0.0 & 0.0 & 0.0 & 0.0 \\ 0.0 & 68.75 & 104.17 & 0.0 & -1.45 & 104.17 & 0.0 & 0.0 & 0.0 \\ 16.03 & 104.17 & 13,333.33 & 0.0 & -104.17 & 5000.0 & 0.0 & 0.0 & 0.0 \\ -201.39 & 0.0 & 0.0 & 604.17 & 0.0 & 0.0 & -402.78 & 0.0 & 0.0 \\ 0.0 & -1.45 & -104.17 & 0.0 & 13.02 & 312.50 & 0.0 & -11.57 & 416.67 \\ 0.0 & 104.17 & 5000.0 & 0.0 & 312.50 & 30,000.00 & 0.0 & -416.67 & 10,000.0 \\ 0.0 & 0.0 & 0.0 & -402.78 & 0.0 & 0.0 & 402.93 & 0.0 & 24.04 \\ 0.0 & 0.0 & 0.0 & 0.0 & -11.57 & -416.67 & 0.0 & 114.14 & 416.67 \\ 0.0 & 0.0 & 0.0 & 0.0 & 416.67 & 10,000.00 & 24.04 & -416.67 & 25,000.00 \end{bmatrix} \begin{Bmatrix} X_1 \\ X_2 \\ X_3 \\ X_4 \\ X_5 \\ X_6 \\ X_7 \\ X_8 \\ X_9 \end{Bmatrix} = \begin{Bmatrix} 0.0 \\ 0.0 \\ 0.0 \\ 0.0 \\ -18.0 \\ 0.0 \\ 0.0 \\ 0.0 \\ 0.0 \end{Bmatrix} \times 10^3 \tag{9-25a}$$

Solution of Eq. (9-25a) yields the displacements:

$$\begin{Bmatrix} X_1 \\ X_2 \\ X_3 \\ X_4 \\ X_5 \\ X_6 \\ X_7 \\ X_8 \\ X_9 \end{Bmatrix} = \begin{Bmatrix} -121.79 \\ -2.86 \\ -1.55 \\ -121.97 \\ -164.63 \\ 1.15 \\ -122.07 \\ -3.97 \\ 2.34 \end{Bmatrix} \times 10^{-3} \tag{9-25b}$$

The member forces are calculated from the nodal displacements by back-substitutions in Eqs. (9-23*a*) to (9-23*d*).

$$\{F\}^1 = \begin{Bmatrix} F \\ V \\ M \end{Bmatrix} = \begin{Bmatrix} S'_4 \\ S'_5 \\ S'_6 \end{Bmatrix} = \left(\frac{E}{312}\right) \begin{Bmatrix} 21.0X_2 \\ -0.0321X_1 - 5.0X_3 \\ 5.0X_1 + 1040.0X_3 \end{Bmatrix} = \begin{Bmatrix} -5.77\,\text{kip} \\ 1.12\,\text{kip} \\ -213.39\,\text{in.-k} \end{Bmatrix} \tag{9-25c}$$

$$\{F\}^2 = \begin{Bmatrix} -1.12\,\text{kip} \\ -5.77\,\text{kip} \\ 618.04\,\text{in.-k} \end{Bmatrix} \tag{9-25d}$$

$$\{F\}^3 = \begin{Bmatrix} -1.12\,\text{kip} \\ 12.23\,\text{kip} \\ -262.25\,\text{in.-k} \end{Bmatrix} \tag{9-25e}$$

$$\{F\}^4 = \begin{Bmatrix} -12.23\,\text{kip} \\ -1.12\,\text{kip} \\ 87.11\,\text{in.-k} \end{Bmatrix} \tag{9-25f}$$

The displacements and internal forces obtained by IFM and the stiffness methods are in agreement.

9.3 Portal Frame—Thermal Load

Analysis for thermal load by IFM and the stiffness method is illustrated by considering the portal frame as an example. A member of a frame can be subjected to two types of temperature variations:

1. A uniform temperature variation (ΔT^a) along its length, which induces the axial thermal load (P^T)
2. A temperature variation (ΔT^a) along its depth (h), which induces the thermal moment (M^T)

The thermal load for the frame is obtained by combining the two component loads: P^T, which was discussed in the truss analysis, and M^T, which was covered in the beam analysis. The thermal deformation in a frame member of length $2a$ shown in Fig. 9-6 is calculated for temperature (T^U and T^ℓ) at upper and lower fibers, respectively. The temperatures are uniform at the top and bottom fibers but vary linearly along the beam depth (h).

The temperature (T^U and T^ℓ) is separated into an axial component (ΔT^a) and a flexural part (ΔT) as

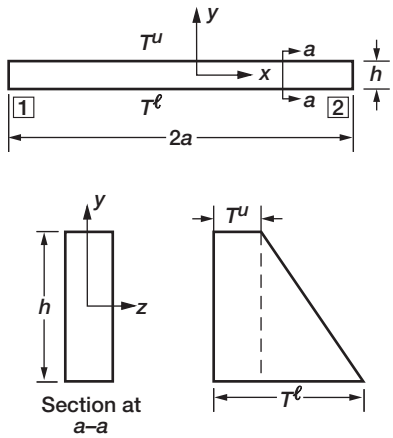

FIGURE 9-6 *Temperature variation in a frame member.*

$$\Delta T^a = \frac{T^u + T^\ell}{2} \tag{9-26a}$$

$$\Delta T = \frac{T^u - T^\ell}{h} \tag{9-26b}$$

The thermal load (P^T) and moment (P^T) are defined as

$$P^T = (EA\alpha)\Delta T^a \tag{9-26c}$$

$$M^T = (EI\alpha)\Delta T \tag{9-26d}$$

The three-component thermal deformation that corresponds to the axial force (F), shear force (V), and bending moment (M), respectively, is

$$\{\beta\}^t = \begin{Bmatrix} (2a\alpha)\Delta T^a \\ -(2a^2\alpha)\Delta T \\ -(2a\alpha)\Delta T \end{Bmatrix} = \frac{1}{E}\begin{Bmatrix} 2a\left(\frac{P^T}{A}\right) \\ -2a^2\left(\frac{M^T}{I}\right) \\ -2a\left(\frac{M^T}{I}\right) \end{Bmatrix} = \begin{Bmatrix} L \\ L \\ - \end{Bmatrix}^{\text{dimension}} \tag{9-26e}$$

The axial component (β_1^t) is the product of axial strain ($\alpha\Delta T^a$) and length ($2a$) and it has a dimension of length L because it corresponds to the differential axial displacement (Δu). The rotational component (β_3^t) is the ratio of thermal expansion to depth ($2a\alpha\Delta T$). Being a differential rotation ($\Delta\theta$), it is dimensionless. The transverse component (β_2^t) also has a length of L because it corresponds to the differential transverse displacement (Δv). The thermal deformations have been derived earlier from an energy consideration. We now continue with the thermal analysis of the frame.

9.4 Thermal Analysis of the Frame by IFM

Member 2 of the frame (connecting nodes 2 and 3) is subjected to a temperature variation through the thickness. At the outer surface the beam is heated to a temperature (T^U) of 100 °F, while its inner surface is cooled ($T^\ell = -100$°F). Determine the response of the frame.

Determination of the internal forces $\{F\}$ due to temperature load requires the calculation of the effective initial deformation vector ($\delta R = -[C]\{\beta^0\}$). The 12-component initial deformation vector $\{\beta^0\}$ is obtained from the element deformations as

$$\{\beta^0\} = \begin{Bmatrix} \{\beta_1^0\} = 0 \\ \{\beta_2^0\} = \\ \{\beta_3^0\} = 0 \\ \{\beta_4^0\} = 0 \end{Bmatrix} = \begin{Bmatrix} 0 \\ \{\beta_2^0\} \\ 0 \\ 0 \end{Bmatrix} \tag{9-27a}$$

In members 1, 3, and 4, there are no initial deformations ($\{\beta_1^0\}=\{\beta_3^0\}=\{\beta_4^0\}= 0$). The deformation in member 2 is obtained for zero axial temperature ($\Delta T^a = T^u + T^\ell = 100 - 100 = 0$) and temperature gradient $\Delta T^a = (T^u - T^\ell)/h = 200/12 = 16.67$ as

$$\{\beta_2^0\} = \begin{Bmatrix} (2a\alpha)\Delta T^a = 0 \\ -(2a^2\alpha)\Delta T = -2 \times 72 \times 72 \times 6.6 \times 10^{-6} \times 16.67 = 1.140 \\ -(2a\alpha)\Delta T = -2 \times 72 \times 6.6 \times 10^{-6} \times 16.67 = 0.0158 \end{Bmatrix} = \begin{Bmatrix} 0 \\ -1.140 \\ -0.0158 \end{Bmatrix} \tag{9-27b}$$

To calculate the three-component vector ($\{\delta R\}= -[C]\{\beta^0\}$), we use the matrix $[C]$ given by Eq. (9-7*d*) and the vector $\{\beta^0\}$ given by Eq. (9-27*a*) to obtain

$$\{\delta R\} = -[C]\{\beta_0\} = \begin{Bmatrix} 10.56 \\ 5.28 \\ 0.00 \end{Bmatrix} \times 10^{-3} \tag{9-27c}$$

The IFM equation given by Eq. (9-10) is solved for a 12-component load vector $\{P^*\}$ whose first nine components are zeros and last three components are $E\{\delta R\}$, where $\{\delta R\}$ is given by Eq. (9-27*c*). The load vector is multiplied by E because the CC was earlier divided by E in Eq. (9-9). The solution of the IFM equation yields the member forces:

$$\begin{Bmatrix} F_1 \\ F_2 \\ F_3 \\ F_4 \\ F_5 \\ F_6 \\ F_7 \\ F_8 \\ F_9 \\ F_{10} \\ F_{11} \\ F_{12} \end{Bmatrix}^{\text{thermal}} = \begin{Bmatrix} 0.50\,\text{kip} \\ -2.10\,\text{kip} \\ 481.03\,\text{in.-k} \\ 2.10\,\text{kip} \\ 0.50\,\text{kip} \\ 409.02\,\text{in.-k} \\ 2.10\,\text{kip} \\ 0.50\,\text{kip} \\ 373.02\,\text{in.-k} \\ -0.5\,\text{kip} \\ 2.10\,\text{kip} \\ -283.64\,\text{in.-k} \end{Bmatrix} \tag{9-27d}$$

The reactions at nodes 1 and 5 are back-calculated from the internal forces as

$$\begin{aligned} R_{v_1} &= -S_2{}^1 = F_2 = -2.10\,\text{kip} \\ R_{f_1} &= S_1^1 = -F_1 = -0.5\,\text{kip} \\ R_{m_1} &= S_3^1 = -(\ell F_2 + F_3) = 175.63\,\text{in.-k} \\ R_{v_5} &= F_{11} = 2.10\,\text{kip} \\ R_{f_5} &= -F_{10} = 0.5\,\text{kip} \\ R_{m_5} &= F_{12} = -283.64\,\text{kip} \end{aligned} \tag{9-27e}$$

The displacements are calculated from the deformation displacement relations using the total deformations. The total deformations for the problem are as follows:

$$\{\beta\}^{\text{total}} = \{\beta\}^{\text{elastic}} + \{\beta\}^{\text{thermal}} = \begin{Bmatrix} 0.00025 + 0.0 \\ 0.26990 + 0.0 \\ 0.00611 + 0.0 \\ 0.00035 + 0.0 \\ 0.43874 - 1.14048 \\ 0.00593 - 0.01584 \\ 0.00017 + 0.0 \\ 0.09528 + 0.0 \\ 0.00261 + 0.0 \\ -0.00016 + 0.0 \\ 0.64119 + 0.0 \\ 0.00119 + 0.0 \end{Bmatrix} = \begin{Bmatrix} 0.00025 \\ 0.26990 \\ 0.00611 \\ 0.00035 \\ -0.70174 \\ -0.00991 \\ 0.00017 \\ 0.09528 \\ 0.00261 \\ -0.00016 \\ 0.64119 \\ 0.00119 \end{Bmatrix} \tag{9-27f}$$

The nodal displacements are as follows:

$$
\begin{aligned}
X_1 &= -\beta_2 = -0.270\,\text{in.}\\
X_2 &= \beta_1 = 0.25 \times 10^{-3}\,\text{in.}\\
X_3 &= \beta_3 = 6.11 \times 10^{-3}\,\text{rad}\\
X_4 &= \beta_4 - \beta_2 = -0.270\,\text{in.}\\
X_5 &= \beta_1 + 144\beta_3 + \beta_5 = 0.178\,\text{in.}\\
X_6 &= \beta_3 + \beta_6 = -3.8 \times 10^{-3}\,\text{rad}\\
X_7 &= \beta_4 + \beta_7 - \beta_2 = -0.270\,\text{in.}\\
X_8 &= \beta_{10} = -0.16 \times 10^{-3}\,\text{in.}\\
X_9 &= -\beta_{12} = -1.19 \times 10^{-3}\,\text{rad}
\end{aligned}
\tag{9-27g}
$$

9.5 Thermal Analysis of a Frame by the Stiffness Method

The stiffness method is extended for thermal analysis through the concept of equivalent load. The equivalent load is calculated using thermal terms in the force displacement relations given by Eq. (9-22) in two steps.

Procedure for Analysis

Step 1—Member Load

The equivalent thermal load terms are retained in Eq. (9-22) when the S-force and displacement relations are written. The six-component thermal load $\{P^T\}$ in a frame member can be written as

$$
\left\{P^T\right\} = E\alpha \begin{Bmatrix} A\Delta T^a \\ 0 \\ \frac{-I\Delta T}{h} \\ -A\Delta T^a \\ 0 \\ \frac{I\Delta T}{h} \end{Bmatrix}
\tag{9-28}
$$

For the portal frame, there is no contribution to the thermal load from members 1, 3, and 4 ($\{P^T\}e^1 = \{P^T\}^3 = \{P^T\}^4 = \{0\}$). Only member 2 contributes to the thermal load $\{P^T\}^2$.

$$
\left\{P^T\right\}^1 = \left\{P^T\right\}^3 = \left\{P^T\right\}^4 = 0
$$

$$\{P^T\}^2 = E\alpha \begin{Bmatrix} 0 \\ 0 \\ -I\Delta T/h \\ 0 \\ 0 \\ I\Delta T/h \end{Bmatrix} = \begin{Bmatrix} 0.0 \\ 0.0 \\ -1188.0\,\text{in.-k} \\ 0.0 \\ 0.0 \\ 1188.0\,\text{in.-k} \end{Bmatrix} \tag{9-29a}$$

Step 2—Frame Load

The EE given by Eqs. (9-3*a*) to (9-3*c*) are rewritten by retaining the thermal contributions. The temperature in member 2 affects two load terms that are associated with S_3^2 and S_6^2 in Eq. (9-29*a*). This, in turn, modifies two EE (the last equations in Eq. 9-3*a* and Eq. 9-3*b*). The two thermal terms become the right side of the stiffness equation Eq. (9-25*a*). The load for the frame is obtained as the negative of the member contribution, but it is placed along the appropriate frame displacement degrees of freedom. Because the coordinate systems are identical for member 2 and the portal frame, the loads occupy locations 3 to 6 in the load vector with a change in the sign.

$$\{P^T\} = \begin{array}{c} 1 \\ 2 \\ 3 \\ 4 \\ 5 \\ 6 \\ 7 \\ 8 \\ 9 \end{array} \begin{Bmatrix} 0.0 \\ 0.0 \\ 1188.0\,\text{in.-k} \\ 0.0 \\ 0.0 \\ -1188.0\,\text{in.-k} \\ 0.0 \\ 0.0 \\ 0.0 \end{Bmatrix} \tag{9-29b}$$

The solution of the stiffness equation (Eq. 9-25*a*) for the load given by Eq. (9-29*b*) yields the displacements as

$$\{X\} = \begin{Bmatrix} -0.270\,\text{in.} \\ 0.25 \times 10^{-3}\,\text{in.} \\ 6.11 \times 10^{-3}\,\text{rad} \\ -0.270\,\text{in.} \\ 0.178\,\text{in.} \\ -3.80 \times 10^{-3}\,\text{rad} \\ -0.270\,\text{in.} \\ -0.16 \times 10^{-3}\,\text{in.} \\ -1.19 \times 10^{-3}\,\text{rad} \end{Bmatrix} \tag{9-29c}$$

The member forces are calculated from the nodal displacements by back-substitutions in Eq. (9-22).

Force in member 1

$$\begin{Bmatrix} F_1 \\ F_2 \\ F_3 \end{Bmatrix} = \begin{Bmatrix} S_4^1 \\ S_5^1 \\ S_6^1 \end{Bmatrix}_{\text{in Eq.(8-22)}} = \begin{Bmatrix} 0.5\,\text{kip} \\ -2.10\,\text{kip} \\ 481.03\,\text{in.-k} \end{Bmatrix}$$

Force in member 2

$$\begin{Bmatrix} F_1 \\ F_2 \\ F_3 \end{Bmatrix} = \begin{Bmatrix} 2.10\,\text{kip} \\ 0.50\,\text{kip} \\ 409.02\,\text{in.-k} \end{Bmatrix}$$

Force in member 3

$$\begin{Bmatrix} F_1 \\ F_2 \\ F_3 \end{Bmatrix} = \begin{Bmatrix} 2.10\,\text{kip} \\ 0.50\,\text{kip} \\ 373.02\,\text{in.-k} \end{Bmatrix}$$

Force in member 4

$$\begin{Bmatrix} F_1 \\ F_2 \\ F_3 \end{Bmatrix} = \begin{Bmatrix} -0.50\,\text{kip} \\ 2.10\,\text{kip} \\ -283.64\,\text{in.-k} \end{Bmatrix} \tag{9-29d}$$

The reaction calculation, which is identical to Eq. (9-27e), is not repeated.

9.6 Support Settling Analysis for Frame

We illustrate the analysis for support settling for IFM and the stiffness method by considering the portal frame as an example. A support node of a frame can settle along three restraint directions. It can displace by u_0 and v_0 amounts along the x- and y-coordinate directions, respectively, and can rotate θ_0 radians in the x–y plane. For the portal frame, consider node 5 to settle by $u_0 = 0.1$ in., $v_0 = -0.15$ in., and $\theta_0 = 0.001$ rad. Determine the response of the frame using IFM and the stiffness method.

Settling of a Portal Frame by IFM

In IFM, support settling is handled by calculating an initial deformation vector $\{\beta^0\}$ and then the deformation vector $\{\delta R\}$. The response of the structure is obtained for the initial deformation by following the procedure that was developed for the thermal load.

The initial deformation vector ($\{\beta^0\} = -[B_R]^T\{X^0\}$) is obtained from the EE matrix $[B_R]$ written for the support nodes that settle by $\{X^0\}$. For the portal frame, the initial displacements are

$$\{X^0\}^5 = \begin{Bmatrix} 0.1 \\ -0.15 \\ 0.001 \end{Bmatrix} \tag{9-30a}$$

The matrix $[B_R]$ is obtained from the EE written at node 5 with reactions $\{R\}$ as the load, $[B_R]\{F\} = \{R\}$, see Eq. (9-12).

$$\begin{bmatrix} 0 & 1 & 0 \\ -1 & 0 & 0 \\ 0 & 0 & 1 \end{bmatrix} \begin{Bmatrix} F_{10} \\ F_{11} \\ F_{12} \end{Bmatrix} = \begin{Bmatrix} R_{x5} \\ R_{y5} \\ R_{m5} \end{Bmatrix} \tag{9-30b}$$

Three forces of member 4 (F_{10}, F_{11}, F_{12}) participate in Eq. (9-30*b*). The corresponding deformations are changed.

$$\{\beta^0\}^4 - [B_R]^T\{X^0\} = -\begin{bmatrix} 0 & -1 & 0 \\ 1 & 0 & 0 \\ 0 & 0 & 1 \end{bmatrix} \begin{Bmatrix} 0.1 \\ -0.15 \\ 0.001 \end{Bmatrix} = \begin{Bmatrix} -0.15 \\ -0.10 \\ -0.001 \end{Bmatrix} \tag{9-30c}$$

The 12-component initial deformation vector $\{\beta^0\}$ is obtained from the component vectors for the four members, ($\{\beta^0\}^1 = \{0\}, \{\beta^0\}^2 = \{0\}, \{\beta^0\}^3 = \{0\}$, and $\{\beta^0\}^4$).

$$\{\beta^0\} = \begin{Bmatrix} 0 \\ 0 \\ 0 \\ 0 \\ 0 \\ 0 \\ 0 \\ 0 \\ 0 \\ -0.15 \\ -0.10 \\ -0.001 \end{Bmatrix} \tag{9-30d}$$

The three-component vector ($\{\delta R\} = -[C]\{\beta^0\}$) is calculated using the matrix $[C]$ given by Eq. (9-7*d*) and the vector $\{\beta^0\}$ given by Eq. (9-30*d*) to obtain

$$\{\delta R\} = -[C]\{\beta^0\} = \begin{Bmatrix} -69.44 \\ 101.5 \\ 67.95 \end{Bmatrix} \times 10^{-5} \tag{9-30e}$$

The IFM equation (Eq. 9-10) is solved for a 12-component load vector $\{P^*\}$ whose first 9 components are zeros and last 3 components are $E\{\delta R\}$, and where $\{\delta R\}$ is given by Eq. (9-30*e*). Young's modulus E multiplies the load vector because the CC was earlier divided by E in Eq. (9-9). The solution of the IFM equation yields the member forces.

$$\begin{Bmatrix} F_1 \\ F_2 \\ F_3 \\ F_4 \\ F_5 \\ F_6 \\ F_7 \\ F_8 \\ F_9 \\ F_{10} \\ F_{11} \\ F_{12} \end{Bmatrix} = \begin{Bmatrix} -0.34\,\text{kip} \\ 0.12\,\text{kip} \\ -33.65\,\text{in.-k} \\ -0.12\,\text{kip} \\ -0.34\,\text{kip} \\ 14.94\,\text{in.-k} \\ -0.12\,\text{kip} \\ -0.34\,\text{kip} \\ 39.23\,\text{in.-k} \\ 0.34\,\text{kip} \\ -0.12\,\text{kip} \\ 76.55\,\text{in.-k} \end{Bmatrix} \tag{9-30f}$$

Reactions at node 1 and 5 are back-calculated from the internal forces as

$$\begin{aligned} R_{x1} &= F_2 = 0.12\,\text{kip} \\ R_{y1} &= -F_1 = 0.34\,\text{kip} \\ R_{m1} &= -(\ell F_2 + F_3) = -3.67\,\text{in.-k} \\ R_{x5} &= F_1 = -0.12\,\text{kip} \\ R_{y5} &= -F_{10} = -0.34\,\text{kip} \\ R_{m5} &= F_{12} = 76.55\,\text{in.-k} \end{aligned} \tag{9-30g}$$

Displacements are calculated from the deformation displacement relations and the total deformations. The total deformations for the problem are as follows:

$$\beta = \left\{ \{\beta\}^e = [G]\{F\} \right\} + \{\beta\}^0 = \begin{Bmatrix} -0.17 \\ -54.73 \\ -0.60 \\ -0.02 \\ -16.75 \\ -0.12 \\ -0.01 \\ 5.53 \\ 0.18 \\ 0.11 \\ 214.96 \\ 1.54 \end{Bmatrix} \times 10^{-3} + \begin{Bmatrix} 0 \\ 0 \\ 0 \\ 0 \\ 0 \\ 0 \\ 0 \\ 0 \\ 0 \\ -150 \\ -100 \\ -1 \end{Bmatrix} \times 10^{-3} = \begin{Bmatrix} -0.17 \\ -54.73 \\ -0.60 \\ -0.02 \\ -16.75 \\ -0.12 \\ -0.01 \\ 5.53 \\ 0.18 \\ -149.89 \\ 114.96 \\ 0.54 \end{Bmatrix} \times 10^{-3} \tag{9-30h}$$

The nodal displacements are as follows:

$$\begin{aligned} \text{Node 2:} \quad X_1 &= -\beta_2 = 54.73 \times 10^{-3}\,\text{in.} \\ X_2 &= \beta_1 = -0.17 \times 10^{-3}\,\text{in.} \\ X_3 &= \beta_3 = -0.60 \times 10^{-3}\,\text{rad} \end{aligned}$$

$$
\begin{aligned}
\text{Node 3:}\quad X_4 &= \beta_4 - \beta_2 = 54.71 \times 10^{-3}\ \text{in.}\\
X_5 &= \beta_1 + 144\beta_3 + \beta_5 = -103.27 \times 10^{-3}\ \text{in.}\\
X_6 &= \beta_3 + \beta_6 = -0.72 \times 10^{-3}\ \text{rad}\\
\text{Node 4:}\quad X_7 &= \beta_4 + \beta_7 - \beta_2 = 54.70 \times 10^{-3}\ \text{in.}\\
X_8 &= \beta_{10} = -149.89 \times 10^{-3}\ \text{in.}\\
X_9 &= -\beta_{12} = -0.54 \times 10^{-3}\text{rad}\\
\text{Node 5:}\quad X_{10} &= 100 \times 10^{-3}\ \text{in.}\\
X_{11} &= -150 \times 10^{-3}\ \text{in.}\\
X_{12} &= 1 \times 10^{-3}\ \text{rad}
\end{aligned}
\tag{9-30i}
$$

Stiffness Method to Analyze Support Settling

The stiffness method is extended for support settling through the concept of equivalent load. The equivalent load is calculated by accounting for the support settling as the initial displacements and writing the force displacement relations given by Eq. (9-22).

The settlement occurs at node 5 for member 4. The stiffness equation for this member, given by Eq. (9-23d), has to be changed. The stiffness equations for members 1 to 3, given by Eqs. (9-23a) to (9-23c), are not changed. The stiffness equation for member 4 that accounts for support settling has the following form:

$$
\{X\}^{\text{member4}} = \begin{Bmatrix} -X_8 \\ X_7 \\ X_9 \\ X_{11} = 150 \times 10^{-3} \\ -X_{10} = 100 \times 10^{-3} \\ X_{12} = 1 \times 10^{-3} \end{Bmatrix}
\tag{9-31a}
$$

$$
\begin{Bmatrix} S_1^4 \\ S_2^4 \\ S_3^4 \\ S_4^4 \\ S_5^4 \\ S_6^4 \end{Bmatrix} = \left(\frac{F}{312}\right) \begin{bmatrix} 32 & 0 & 0 \\ 0 & 0.048 & 7.5 \\ 0 & 7.5 & 1560 \\ -32 & 0 & 0 \\ 0 & -0.048 & -7.5 \\ 0 & 7.5 & 780 \end{bmatrix} \begin{Bmatrix} -X_8 \\ X_7 \\ X_9 \end{Bmatrix} + \left(\frac{E}{312}\right) \begin{bmatrix} -32 & 0 & 0 \\ 0 & -0.048 & 7.5 \\ 0 & -7.5 & 780 \\ 32 & 0 & 0 \\ 0 & 0.048 & 7.5 \\ 0 & 7.5 & 1560 \end{bmatrix} \begin{Bmatrix} 150 \times 10^{-3} \\ 100 \times 10^{-3} \\ 1 \times 10^{-3} \end{Bmatrix}
\tag{9-31b}
$$

The second portion of Eq. (9-31b) containing the initial deformation contributes to the load. The numerical values of the contribution are

$$\begin{Bmatrix} S_1^4 \\ S_2^4 \\ S_3^4 \\ S_4^4 \\ S_5^4 \\ S_6^4 \end{Bmatrix}^{\text{Load Contributions}} = \begin{Bmatrix} -461.50\,\text{kip} \\ 0.26\,\text{kip} \\ 2.88\,\text{in.-k} \\ 461.50\,\text{kip} \\ 1.18\,\text{kip} \\ 222.11\text{in.-k} \end{Bmatrix} \tag{9-31c}$$

The load terms are obtained from Eq. (9-3) for initial deformations in the absence of any other load ($P = 0$). There are no loads ($P_1^{\text{I}} = P_2^{\text{I}} = P_3^{\text{I}} = P_4^{\text{I}} = P_5^{\text{I}} = P_6^{\text{I}} = 0$) along the displacement directions (X_1 to X_6). The load components (P_7^{I}, P_8^{I}, P_9^{I}) along the displacement directions (X_7, X_8, X_8), respectively, are obtained from the three equations given (Eq. 9-3c).

$$P_7^I = -\left(S_4^3 + S_2^4\right)^{\text{Load Contribution}} = -0.26\,\text{kip}$$

$$P_8^I = -\left(-S_1^4 + S_5^3\right)^{\text{Load Contribution}} = -461.5\,\text{kip}$$

$$P_9^I = -\left(-S_6^3 + S_3^4\right)^{\text{Load Contribution}} = -2.88\,\text{in.-k} \tag{9-31d}$$

The solution of the stiffness equation (Eq. 9-25a) for the initial load $\{P^{\text{I}}\}$ (Eq. 9-31a) yields the displacements as

$$\{X\} = \begin{Bmatrix} 54.73\,\text{in.} \\ -0.17\,\text{in.} \\ -0.60\,\text{rad} \\ 54.71\,\text{in.} \\ -103.27\,\text{in.} \\ -0.72\,\text{in.} \\ 54.7\,\text{rad} \\ -149.89\,\text{in.} \\ -0.54\,\text{rad} \\ 100.0\,\text{in.} \\ -150.0\,\text{in.} \\ 1.0\,\text{rad} \end{Bmatrix} \times 10^{-3} \tag{9-31e}$$

Prescribed at node5

The member forces are calculated from the nodal displacements by back-substitutions in Eq. (9-25c).

$$\text{Member 1:}\quad \begin{Bmatrix} F_1 \\ F_2 \\ F_3 \end{Bmatrix} = \begin{Bmatrix} S_4^1 \\ S_5^1 \\ S_6^1 \end{Bmatrix} = \frac{E}{312}\begin{bmatrix} -21.0 & 0 & 0 \\ 0 & -0.321 & 5 \\ 0 & -5 & 520 \\ -21.0 & 0 & 0 \\ 0 & 0.0321 & -5 \\ 0 & -5 & 1.4 \end{bmatrix} \begin{Bmatrix} X_2 = 0.17 \times 10^{-3} \\ -X_1 = -54.73 \times 10^{-3} \\ X_3 = -0.60 \times 10^{-3} \end{Bmatrix} = \begin{Bmatrix} -0.34\,\text{kip} \\ 0.12\,\text{kip} \\ -33.65\,\text{in.-k} \end{Bmatrix}$$

$$\text{Member 2:}\quad \begin{Bmatrix} F_4 \\ F_5 \\ F_6 \end{Bmatrix} = \begin{Bmatrix} -0.12\,\text{kip} \\ -0.34\,\text{kip} \\ 14.94\,\text{in.-k.} \end{Bmatrix}$$

$$\text{Member 3:}\quad \begin{Bmatrix} F_7 \\ F_8 \\ F_9 \end{Bmatrix} = \begin{Bmatrix} -0.12\,\text{kip} \\ -0.34\,\text{kip} \\ 39.234\,\text{in.-k} \end{Bmatrix}$$

$$\text{Member 4:}\quad \begin{Bmatrix} F_{10} \\ F_{11} \\ F_{12} \end{Bmatrix} = \begin{Bmatrix} 0.34\,\text{kip} \\ -0.12\,\text{kip} \\ 76.55\,\text{in.-k} \end{Bmatrix} \tag{9-31f}$$

The reaction calculation, which is identical to Eq. (9-30*g*), is not repeated. Response obtained by the stiffness method is in agreement with the IFM solution.

Problems

Use the properties of material given in Tables A5-1 and A5-2 to solve of the problems.

9-1 Generate models for the four frames shown in Fig. P9-1 for analysis by force and stiffness methods. For each model, specify the internal forces, nodal displacements, member deformations, reactions, as well as the number of equilibrium equations and compatibility conditions, and the degree of internal and external indeterminacy.

1. The L frame in the Fig. P9-1*a* is made of two members with the same material with Young's modulus (E). The area and moment of inertia of the members are (A, I), load and dimensions are marked in the figure.
2. The triangular frame is made of two beam members with the same Young's modulus (E). Area is (A) and moment of inertia is (I). It is hinged at A, B, and C and subjected to load at B.
3. The frame shown in Fig. P9-1*c* is made of a beam and a truss bar with boundary conditions, dimensions, and loads as marked in Fig. 9-1*c*.

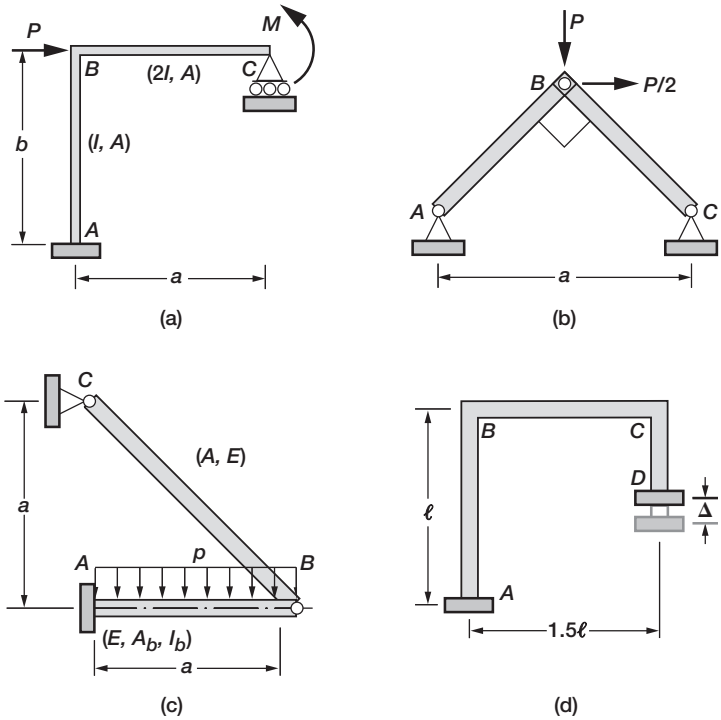

FIGURE P9-1

4. The frame shown in Fig. P9-1*d* has Young's modulus (E), area (A) and moment of inertia (I), and other dimensions as marked. The change in temperature of the member BC is 100°F at the top fiber and it is 50°F at the bottom fiber. The support at D settles by (Δ) in. as marked.

9-2 Analyze by IFM and stiffness method the fixed beam with a midspan column attachment as shown in Fig. P9-2. It is made of steel with area ($A = 19{,}800\,\text{mm}^2$) and

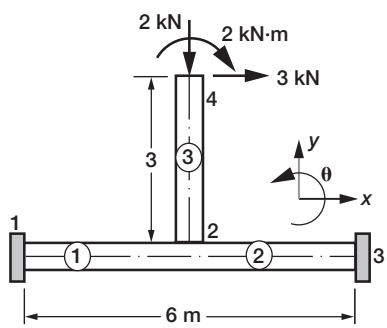

FIGURE P9-2

moment of inertia (of beam $I_b = 1290 \times 10^6\,\text{mm}^4$ and column $I_c = 0.5I_b$). Other dimensions as marked in the figure. It is subjected to four load cases as:

Case 1: Load along the negative y-coordinate axis ($P_y = 2\,\text{kN}$) only
Case 2: Load along the x-coordinate axis ($P_x = 3\,\text{kN}$) only
Case 3: A moment ($M = 2\,\text{kN}$) in the x–y–plane only
Case 4: Load Cases 1 to 3 are applied simultaneously

9-3 Analyze either by IFM or stiffness method the fixed shaft with a midspan column attachment as shown in Fig. P9-3. It is made of steel tubes with outer and inner diameters of 6 and 5 in., respectively. Other dimensions are marked in the figure. It is subjected to a 1 kip load in the negative z-coordinate direction as shown.

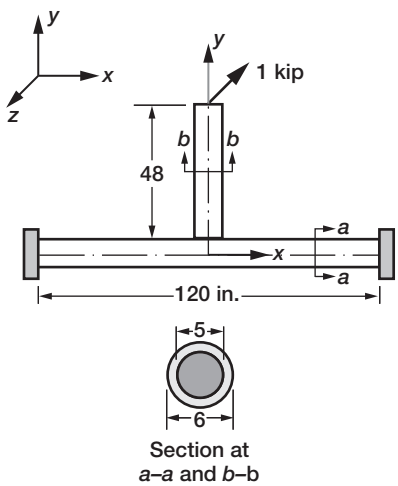

FIGURE P9-3

9-4 The aluminum L-frame ABC with area (A) and inertia (I) is simply supported at A and C, as shown in Fig. P9-4. It is subjected to a load (P) and its dimensions are as marked in the figure. Calculate the slopes and reactions at A and C for the following load cases:

Case 1: For mechanical load ($P = 5\,\text{kN}$)
Case 2: Settling of support at C by ($\Delta = 10\,\text{mm}$) as shown

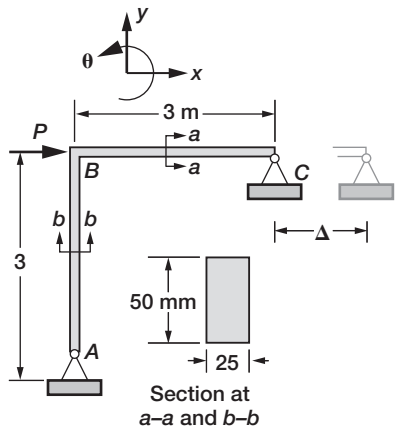

FIGURE P9-4

9-5 A steel beam is attached to an aluminum bar as shown in Fig. P9-5. The bar has one in.^{2} cross-sectional area. The beam has a rectangular cross-section with a depth ($d = 6$ in.) and width ($t = 1$ in.). Calculate the reactions at C and internal force in the bar for the following thermal load cases.

Case 1: The temperature is increased only in the bar by ($\Delta T = 100°$F)
Case 2: Only a change in temperature through the beam depth. The upper and lower fiber temperatures are ($\Delta T^u = 100°$F and $\Delta T^L = -100°$F), respectively

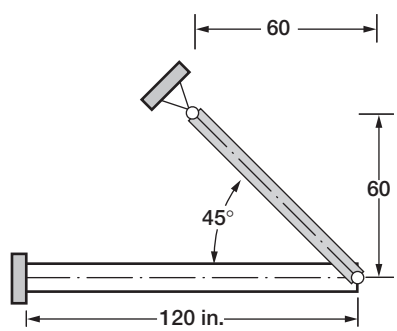

FIGURE P9-5

9-6 A cross frame is made of steel tubes with dimensions as shown in Fig. P9-6. The temperature in the entire structure is uniformly increased by ($\Delta T = 100°$C). Calculate the reactions at the supports.

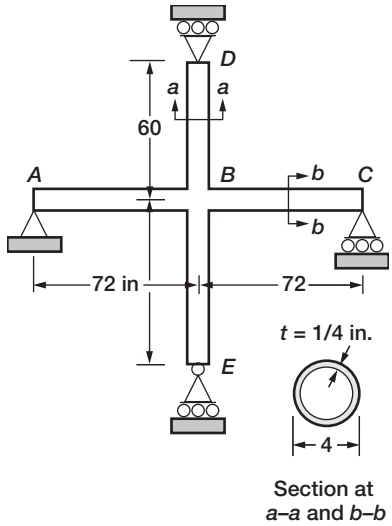

FIGURE P9-6

10 Two-Dimensional Structures

The truss, beam, shaft, and frame structures analyzed thus far are made of slender members with lengths much greater than their depths or thicknesses. Because the mass distribution dominates along the single length dimension, these are also referred to as one-dimensional structures or frameworks. Plates and shells are examples of two-dimensional structures. Two dimensions (or spans) of such structure are comparable and large. The third dimension or the thickness (or depth) is small compared to the other two dimensions. The analysis of a two-dimensional structure is difficult and beyond the scope of this textbook. However, strength of materials addresses two topics of the two-dimensional structures:

1. Analysis of stress state is a two-dimensional structure, or two-dimensional stress state.
2. Analysis of simple shells.

Both topics are introduced in this chapter.

10.1 Stress State in a Plate

A plate is shown in Fig. 10-1. Its dimensions along the x- and y-coordinate directions are $a = 12$ in. and $b = 6.0$ in., respectively. It has a small uniform thickness ($t = 0.25$ in.) as shown in Fig. 10-1b. It is a two-dimensional structure because $a/t = 48 \gg 1$ and $b/t = 24 \gg 1$. The plate is made of steel with a Young's modulus E of 30,000 ksi and a Poisson's ratio ν of 0.30. It is restrained along the boundary nodes (1 and 4). It is subjected to a 1.5-kip load at node 2 along the y-coordinate direction and a 1.0–kip load at node 3 along the x-coordinate direction.

The analysis of the plate requires advanced solid mechanics formulation, and it is not covered in strength of materials. We will assume that it has been analyzed as a membrane

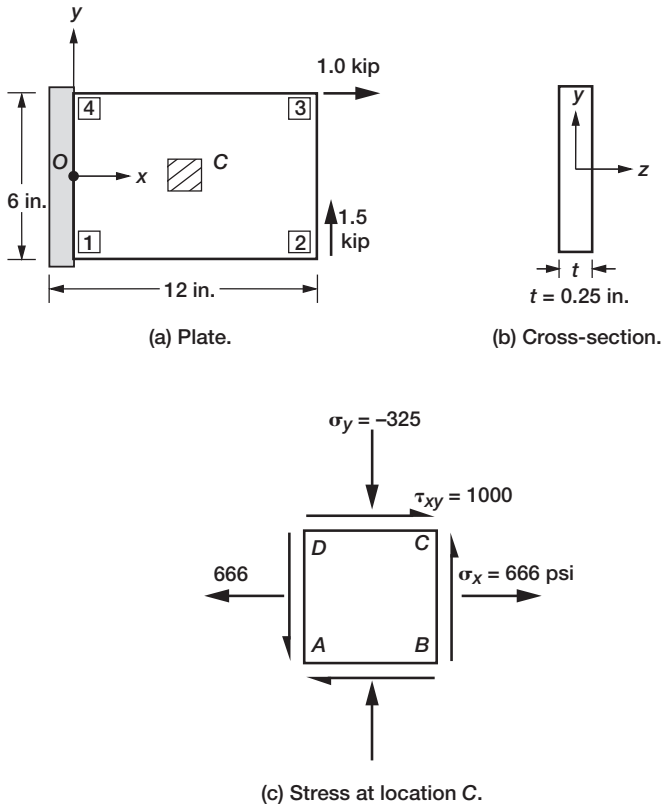

FIGURE 10-1 *Stress in a rectangular plate.*

structure. In such an analysis, the stress state is considered to be uniform across the thickness and only three stress components are induced. These are the two normal stresses (σ_x, σ_y) and a shear stress, which is symmetrical ($\tau_{xy=}\tau_{yx=}\tau$). The membrane stress state (σ_x, σ_y, τ_{xy}) is also referred to as the plane stress, or two-dimensional, stress state. The three stress components at the plate centroid C are marked on an elemental block (A–B–C–D) in Fig. 10-1c. The values of the stresses are approximate because an elementary model was employed for its analysis. The normal tensile stress along the x-direction is $\sigma_x = 666$ psi. The normal compressive stress along the y-direction is $\sigma_y = -325$ psi. The shear stress in the x–y plane is $\tau_{xy} = 1000$ psi.

10.2 Plane Stress State

The three components of the plane stress state can be arranged to obtain a (2×2) stress matrix $[\tau]$ as

$$[\tau] = \begin{bmatrix} \sigma_x & \tau_{xy} \\ \tau_{xy} & \sigma_y \end{bmatrix} = \begin{bmatrix} \tau_{xx} & \tau_{xy} \\ \tau_{yx} & \tau_{yy} \end{bmatrix} = \begin{bmatrix} \sigma_x & \tau \\ \tau & \sigma_y \end{bmatrix} \tag{10-1}$$

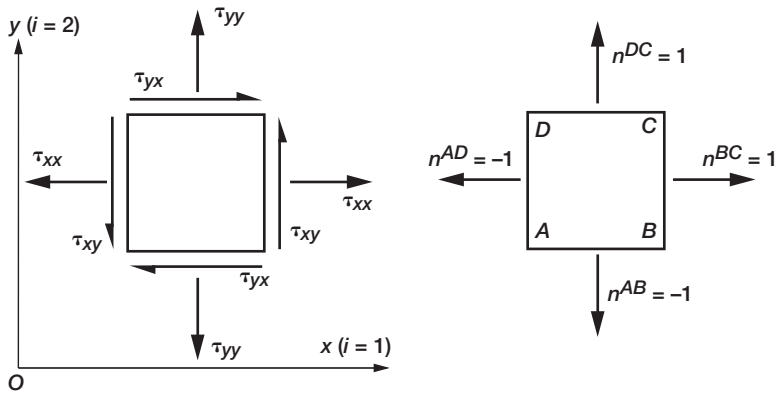

FIGURE 10-2 *Plane stress state.*

The components of the stress tensor [τ] can be written with two subscripts (i, j), such as τ_{ij}, as marked on the elemental block *A–B–C–D* in Fig. 10-2. Elasticity analysis prefers numerical subscripts ($i = 1$ or 2, and $j = 1$ or 2). We will use engineering notation ($i = x$ or y, and $j = x$ or y), with x and y representing the coordinates, respectively. The stress tensor is described with the following convention.

1. In the elemental block (*A–B–C–D*) in Fig. 10-2, the face *BC* is referred to as the positive x-face because the normal (n) to this face ($n^{BC} = 1$) is directed along the x-coordinate axis. The face *AD* is referred to as the negative x-face because its normal ($n^{AD} = -1$) points along the negative x-coordinate axis. Likewise, the face *DC* is the positive y-face ($n^{DC} = 1$). The face *AB* (with $n^{AB} = -1$) is the negative y-face.

2. The sign of stress is determined from the product $(n \times f)$, where f is the direction of the stress, and (n) is normal to this face. Stress on face *DC* (τ_{yx}) is positive because $n^{DC} = 1$ and $f^{DC} = 1$. Stress on face *AB* (τ_{yx}) is also positive because $n^{AB} = -1$, $f^{AB} = -1$, and their product is positive. The normal stress components (τ_{xx} and τ_{yy}) shown in Fig. 10-2 are positive.

3. The first subscript (x) in the stress τ_{xy} refers to the face (x) on which it acts. The stresses τ_{xx} and τ_{xy} act on the x-face, which can be either the positive x-face (*BC*) or the negative x-face (*AD*). Likewise, the stresses τ_{yy} and τ_{yx} act on the y-face, which can be either the positive y-face (*DC*) or the negative y-face (*AB*).

4. The rotational equilibrium consideration makes shear stress symmetrical ($\tau_{xy} = \tau_{yx}$) with respect to the subscripts (x and y). Because there is a single shear stress, it is written without its subscripts ($\tau = \tau_{yx} = \tau_{xy}$). The shear stress acts parallel to the face, and on adjacent faces the arrows must be congruent. Admissible positive and negative shear stress is marked in Figs. 10-3*a* and 10-3*c*, respectively. The shear stress as marked in Fig. 10-3*b* is inadmissible because the arrows are noncongruent at *C* and *D*.

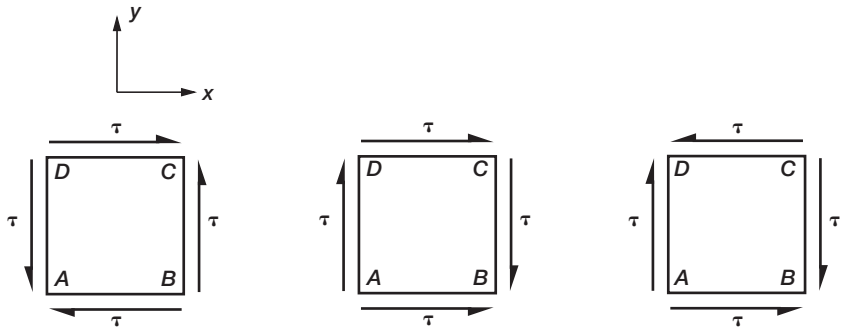

(a) Admissible (positive τ). (b) Inadmissible. (c) Admissible (negative τ).

FIGURE 10-3 *Sheer stress* (τ).

5. The component τ_{xx} or τ_{yy} is called the normal stress because it acts perpendicular to the face. Stress τ_{xx} acts perpendicular to face *BC*, whereas stress τ_{yy} acts normal to face *CD*. In engineering, the repeated subscript is dropped and the Greek letter τ is replaced by σ ($\sigma_x = \tau_{xx}$ and $\sigma_y = \tau_{yy}$). The plane stress state is represented by σ_x, σ_y, and τ. All three representations of stress state in Eq. (10-1) are acceptable.

EXAMPLE 10-1

The following plane stress tensor is determined for a problem.

$$[\tau] = \begin{bmatrix} -1000.0 & 500.0 \\ -600.0 & 2000.0 \end{bmatrix} \text{psi} \tag{10-2a}$$

Mark the stress state in an elemental block.

The normal stress components are: $\sigma_x = -1000\,\text{psi}$ and $\sigma_y = 2000\,\text{psi}$. The two shear stress components ($\tau_{xy} = -500\,\text{psi}$ and $\tau_{yx} = -600\,\text{psi}$) do not match. The unsymmetrical stress state in Eq. (10-2*a*) is not correct. To proceed with the example, we correct the shear stress using an average value of $\tau = (500 - 600)/2 = -50$. The corrected stress tensor may be

$$[\tau] = \begin{bmatrix} -1000.0 & -50 \\ -50 & 2000 \end{bmatrix} \text{psi} \tag{10-2b}$$

The stress state is marked in Fig. 10-4. The negative normal stress ($\sigma_x = -1000\,\text{psi}$) induces compression along the *x*-coordinate direction. The positive normal stress ($\sigma_y = 2000\,\text{psi}$) induces tension along the *y*-coordinate direction. The shear stress $\tau = -50$. Along face *AB*, it is negative because $n^{AB} = -1$ and $f^{AB} = 1$. Likewise, it is negative along the other three faces: $n^{BC} = 1$ and $f^{BC} = -1$, $n^{DC} = 1$ and $f^{DC} = -1$, and $n^{AD} = -1$ and $f^{AD} = 1$.

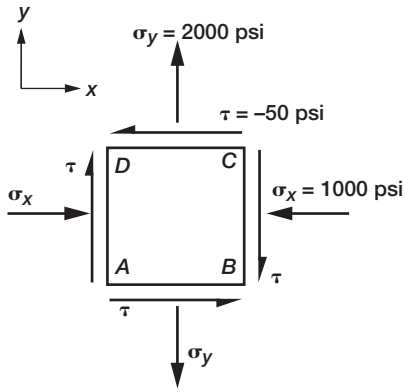

FIGURE 10-4 *Stresses on an elemental block, Example 10-1.*

10.3 Stress Transformation Rule

Stress is a tensor, and its transformation follows a special rule, called the tensor transformation rule. The equilibrium equations are used to derive this rule.

Consider a plane stress state in the two-dimensional x- and y-coordinate system, as marked on the differential block A–B–C–D in Fig. 10-5a. Let us assume it to be a square block with sides a. To account for the variation of stress along x and y, we consider the sides of the block to be small ($a = \Delta$). The block has a thickness t along the z-coordinate direction, which is not shown in the figure. Two stress components (σ_x and τ) act on the face AD. Consider a face DQ with an outward normal n. The normal is inclined at an angle θ with the x-coordinate axis. The two stress components in the DQ face are: normal stress σ'_x

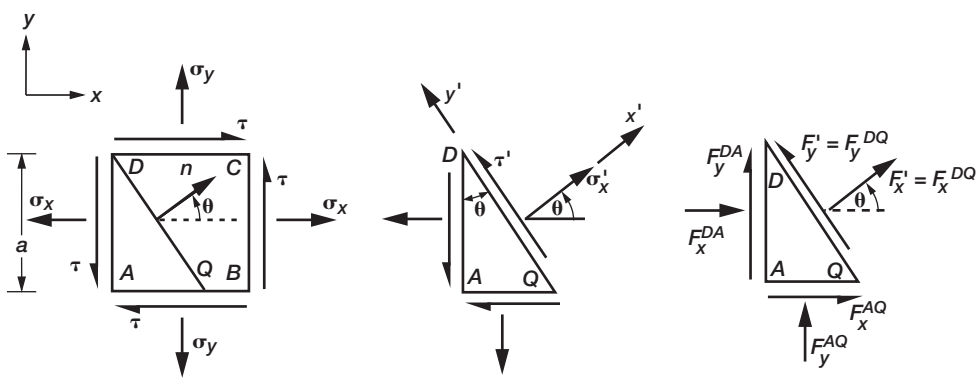

(a) Stress. (b) Axis x' and y'. (c) Forces on faces.

FIGURE 10-5 *Plane stress on a differential block.*

and shear stress τ'. The stress σ'_x is along the normal, whereas the shear stress τ' is tangential to the face as shown in Fig. 10-5*b*.

The problem is to determine the stress (σ'_x and τ') in the face DQ in terms of σ_x, σ_y, and τ; and the angle of inclination θ. A coordinate system can be constructed with the x' coordinate along the normal (n) and the y' coordinate along the tangent, as shown in Fig. 10-5*b*. The x' and y' system is an orthogonal coordinate system. It is obtained by rotating the original x and y system by an angle θ. The relationship of the three stresses (σ_x, σ_y, τ) and (σ'_x, σ'_y, τ') is also referred to as the coordinate transformation rule, because both stress states act at the same point but in different coordinate systems that are rotated with respect to each other. This rule can be developed in the following steps:

Step 1—Calculate the Length of the Sides of the Triangle ADQ

The length of the three sides of the triangle are

$$\begin{aligned} DQ &= b = a\sec\theta \\ DA &= a = b\cos\theta \\ AQ &= b\sin\theta \end{aligned} \tag{10-3a}$$

The area (c) of the rectangle formed by diagonal DQ and its thickness (t) is

$$c = bt \tag{10-3b}$$

The forces acting along on the three sides are marked in Fig. 10-5*c*. The forces are oriented along the positive axes and are positive. The forces are related to the stress as follows:

$$\begin{aligned} F_x^{DA} &= -\sigma_x(c\cos\theta) \\ F_y^{DA} &= -\tau(c\cos\theta) \\ F_x^{AQ} &= -\tau(c\sin\theta) \\ F_y^{AQ} &= -\sigma_y(c\sin\theta) \\ F_x^{DQ} &= \sigma'_x(c) = F'_x \\ F_y^{DQ} &= \tau'(c) = F'_y \end{aligned} \tag{10-3c}$$

Here

F_x^{DA} = force along the x-axis on face DA

F_y^{DA} = force along the y-axis on face DA

F_x^{AQ} = force along the x-axis on face AQ

F_y^{AQ} = force along the y-axis on face AQ

$$F_x^{DQ} = \text{force along the } x\text{-axis on face } DQ$$

$$F_y^{DQ} = \text{force along the } y\text{-axis on face } DQ$$

The equilibrium of forces is considered along the new x'- and y'-coordinate directions in the face DQ in Figs. 10-5*b* and *c*. The forces in the two figures are equivalent.

$$\sum F_{x'} = 0 = c\left(\sigma'_x + F_x^{DA}\cos\theta + F_y^{DA}\sin\theta + F_x^{AQ}\cos\theta + F_y^{AQ}\sin\theta\right) = 0$$

$$\sum F_{y'} = 0 = c\left(\tau' - F_x^{DA}\sin\theta + F_y^{DA}\cos\theta - F_x^{AQ}\sin\theta + F_y^{AQ}\cos\theta\right) = 0 \qquad (10\text{-}3d)$$

Equation (10-3*d*) is simplified to obtain

$$\sigma'_x = \sigma_x\cos^2\theta + 2\tau\sin\theta\cos\theta + \sigma_y\sin^2\theta$$

$$\tau' = -\sigma_x\sin\theta\cos\theta + \tau\cos^2\theta - \tau\sin^2\theta + \sigma_y\sin\theta\cos\theta \qquad (10\text{-}3e)$$

The following trigonometric identities are used to simplify Eq. (10-3*e*).

$$\begin{aligned}
\sin^2\theta + \cos^2\theta &= 1\\
\sin 2\theta &= 2\sin\theta\cos\theta\\
\cos 2\theta &= \cos^2\theta - \sin^2\theta\\
\cos^2\theta &= \frac{1+\cos 2\theta}{2}\\
\sin^2\theta &= \frac{1-\cos 2\theta}{2}\\
\cos[2(\theta+90)] &= -\cos(2\theta)\\
\sin[2(\theta+90)] &= -\sin(2\theta)
\end{aligned} \qquad (10\text{-}3f)$$

Simplification of the EE yields the stress transformation rule.

$$\sigma'_x = \frac{(\sigma_x+\sigma_y)}{2} + \frac{(\sigma_x-\sigma_y)}{2}\cos 2\theta + \tau\sin 2\theta$$

$$\tau' = -\frac{(\sigma_x-\sigma_y)}{2}\sin 2\theta + \tau\cos 2\theta$$

$$\sigma'_y = \frac{(\sigma_x+\sigma_y)}{2} - \frac{(\sigma_x-\sigma_y)}{2}\cos 2\theta - \tau\sin 2\theta \qquad (10\text{-}3g)$$

We can obtain the last equation in Eq. (10-3*g*) by creating a face perpendicular to *DQ* and writing the EE, or simply by replacing θ with $\theta + 90$ and σ'_x with σ'_y. The transformation rule is applicable for the calculate stress at the same point but with an arbitrary orientation (θ).

EXAMPLE 10-2

A plane stress tensor at a point in the x–y coordinate system is $\sigma_x = 1$ ksi, $\sigma_y = 0.5$ ksi, and $\tau = 100$ psi. Calculate the stress tensor in an x'–y' system that is rotated by $\theta = 45°$ to the x–y system.

The two stress states are marked in Fig. 10-6. The stress state (σ'_x, σ'_y, τ') is determined from Eq. (10-3g).

$$\sigma'_x = \frac{(1000 + 500)}{2} + \frac{(1000 - 500)}{2}\cos 90° + 100 \sin 90° = 850 \text{ psi}$$

$$\sigma'_y = \frac{(1000 + 500)}{2} - \frac{(1000 - 500)}{2}\cos 90° - 100 \sin 90° = 650 \text{ psi}$$

$$\tau' = \frac{-(1000 - 500)}{2}\sin 90° + 100 \cos 90° = -250 \text{ psi} \tag{10-4}$$

The normal stress component ($\sigma'_x = 850$ psi) is lower than $\sigma_x = 1000$ psi by 150 psi, and $\sigma'_y = 650$ psi is higher than σ_y by the same amount. In other words, the sum of the normal stresses is not changed ($\sigma'_x + \sigma'_y = \sigma_x + \sigma_y = 1000$ psi). The shear stress ($\tau' = -250$ psi) increases with a change in sign.

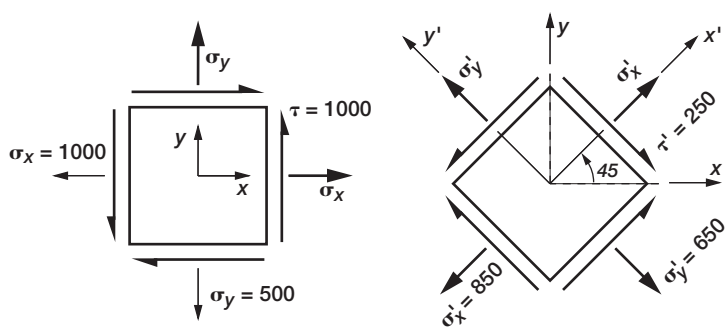

FIGURE 10-6 *Stress transformation, Example 9-2.*

10.4 Principal Stresses

The values of the stress components (σ'_x, σ'_y, τ') change with the angle of orientation (θ). At a certain orientation ($\theta = \theta°$), the shear stress vanishes ($\tau° = 0$). The corresponding normal stresses ($\sigma°_x$ and $\sigma°_y$) are called the principal stresses. The orientation ($\theta°$) is referred to as the principal direction.

The principal stresses and direction are conveniently calculated through the eigenvalue property of a matrix. The eigenvalue problem for a 2×2 matrix can be written as

$$\begin{bmatrix} a & b \\ b & c \end{bmatrix} \begin{Bmatrix} \ell \\ m \end{Bmatrix} = \lambda \begin{Bmatrix} \ell \\ m \end{Bmatrix} \tag{10-5a}$$

The matrix coefficients are related to stress ($a = \sigma_x$, $b = \sigma_y$, and $c = \tau$). The parameter λ is called the eigenvalue, and it becomes the principal stress. The vector $\{\ell, m\}$ is called the eigenvector, and it is related to the principal direction (θ°). Eigen is a German word meaning "proper." In an eigenvalue problem ($[B]\{X\} = \lambda\{X\}$), the two vectors ($\{[B]\{X\}\}$ and $\lambda\{X\}$) can be considered to be collinear. The ratio of ($\{[B]\{X\}\}$ to $\{X\}$) in some arithmetic scale is related to the eigenvalue corresponding to that eigenvector. Equation (10-5*a*) is rewritten to obtain

$$\begin{bmatrix} a-\lambda & b \\ b & c-\lambda \end{bmatrix} \begin{Bmatrix} \ell \\ m \end{Bmatrix} = 0 \tag{10-5b}$$

The homogeneous equation is satisfied for any trivial eigenvector, and this does not interest us. A nontrivial eigenvector exists provided the determinate vanishes.

$$\begin{Vmatrix} a-\lambda & b \\ b & c-\lambda \end{Vmatrix} = 0 \tag{10-5c}$$

$$(a-\lambda)(c-\lambda) - b^2 = 0 \tag{10-5d}$$

The determinate is expanded to obtain a quadratic equation, and the solution yields two eigenvalues (λ_1, λ_2).

$$\lambda^2 - \lambda(a+c) + \left(ac - b^2\right) = 0 \tag{10-5e}$$

$$\lambda_1, \lambda_2 = \frac{(a+c)}{2} \pm \sqrt{\left(\frac{a-c}{2}\right)^2 + b^2} \tag{10-5f}$$

The coefficient ($I_1 = a + c = \sigma_x + \sigma_y$) in Eq. (10-5*e*) is referred to as the first invariant of stress. Likewise, I_2 ($I_2 = ac - b^2 = \sigma_x\sigma_y - \tau^2$) is called the second invariant of stress. The invariants (I_1 and I_2) do not change during the transformation. In other words, I_1 and I_2 are unchanged by any arbitrary rotation ($I_1 = \sigma_x + \sigma_y = \sigma'_x + \sigma'_y$ and $I_2 = \sigma_x\sigma_y - \tau^2 = \sigma'_x\sigma'_y - \tau'^2$). The stress invariance is proved subsequently.

The two eigenvalues are the two principal stresses ($\sigma_1 = \lambda_1$ and $\sigma_2 = \lambda_2$).

$$\sigma_1 = \frac{(\sigma_x + \sigma_y)}{2} + \sqrt{\left(\frac{\sigma_x - \sigma_y}{2}\right)^2 + \tau^2} \tag{10-5g}$$

$$\sigma_2 = \frac{(\sigma_x + \sigma_y)}{2} - \sqrt{\left(\frac{\sigma_x - \sigma_y}{2}\right)^2 + \tau^2} \tag{10-5h}$$

The algebraically larger stress is called the first principal stress, and the smaller stress is called the second principal stress. Solution of Eq. (10-5*b*) yields the eigenvector as

$$\ell = \frac{-bm}{(a - \lambda)}$$

$$\ell = \frac{-(c - \lambda)m}{b} \tag{10-5i}$$

The component ℓ has two values, or it is not uniquely defined. In stress analysis, the eigenvector is normalized ($\ell^2 + m^2 = 1$) to obtain

$$\ell = \frac{-b}{\sqrt{b^2 + (a - \lambda)^2}} = \frac{-\tau}{\sqrt{\tau^2 + (\sigma_x - \lambda)^2}}$$

$$m = \frac{a - \lambda}{\sqrt{b^2 + (a - \lambda)^2}} = \frac{\sigma_x - \lambda}{\sqrt{\tau^2 + (\sigma_x - \lambda)^2}}$$

$$\frac{\ell}{m} = \frac{-\tau}{(\sigma_x - \lambda)} \tag{10-5j}$$

The components ℓ and m are the direction cosines of the principal plane, and in geometry, these are defined as

$$\ell = \cos\theta$$
$$m = \sin\theta \tag{10-5k}$$

The tangent of the principal angle is obtained as the ratio of m to ℓ as

$$\tan\theta = \frac{m}{\ell} = -\frac{a - \lambda}{b} = -\frac{\sigma_x - \lambda}{\tau} \tag{10-5l}$$

Traditionally, the principal angle is expressed in terms of the stresses (σ_x, σ_y, τ) instead of an eigenvalue. Trigonometric manipulation provides the formula for the principal angle.

$$\tan 2\theta = \frac{2\tan\theta}{1-\tan^2\theta} = \frac{2\tau(\sigma_x-\lambda)}{(\sigma_x-\lambda)(\sigma_x-\sigma_y)} = \frac{2\tau}{(\sigma_x-\sigma_y)} \tag{10-5m}$$

Principal stress calculation requires the application of Eqs. (10-5*g*), (10-5*h*), and (10-5*m*).

EXAMPLE 10-3

Calculate the principal stresses for the plane stress state ($\sigma_x = -460$ psi, $\sigma_y = 120$ psi, and $\tau = -190$ psi). Sketch the principal stresses.

The two principal stresses (σ_1 and σ_2) are obtained from Eqs. (10-5*g*) and (10-5*h*).

$$a = \sigma_x = -460$$

$$b = \tau = -190$$

$$c = \sigma_y = 120$$

$$(\lambda_1, \lambda_2) = -170 \pm \sqrt{290^2 + 190^2}$$

$$\sigma_1 = \lambda_1 = 176.7$$

$$\sigma_2 = \lambda_2 = -516.7 \tag{10-6a}$$

For each principal stress, the principal direction, which is an eigenvector, is obtained from Eq. (10-5*i*).

For $\sigma_1 = 176.7$

$$\ell_1 = \frac{190}{\sqrt{190^2 + (-460-176.7)^2}} = 0.286$$

$$m_1 = \frac{-460-176.7}{\sqrt{190^2 + (-460+176.7)}} = -0.958$$

$$\theta_1 = \tan^{-1}\left(-\frac{\sigma_x-\lambda}{\tau} = -3.35\right) = -73.4^\circ \cong -73^\circ$$

For $\lambda_2 = -516.7$

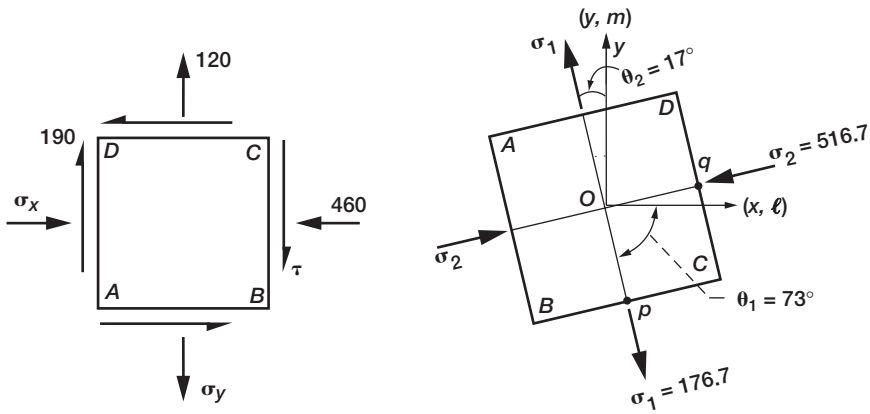

(a) Plane stress state. (b) Principal stress.

FIGURE 10-7 *Principal stress calculation.*

$$\ell_2 = \frac{190}{198.28} = 0.958$$

$$m_2 = \frac{56.7}{198.28} = 0.286$$

$$\theta_2 = \tan^{-1}\left(\frac{m}{\ell}\right) = \tan^{-1}(0.298) = 16.62 \cong 17^\circ \qquad (10\text{-}6b)$$

The principal stresses are orthogonal, as shown in Fig. 10-7*b*. The principal stresses are sketched in the following steps.

Step 1—Scale

Select a convenient scale, and sketch a square elemental block in the *x*–*y* plane, as shown in Fig. 10-7*a*. A block (*A*–*B*–*C*–*D*) with dimensions of about 2.5 cm (or 1 in.) is considered. The *x*–*y* coordinates are along the usual horizontal and vertical directions, but these need not be marked in the figure.

Step 2—Mark the Stresses

The plane stress state is marked in the block. The negative normal stress ($\sigma_x = -460$) is shown as compression, whereas $\sigma_y = 120$ is shown as tension. The negative shear stress ($\tau = -190$) on the face *BC* is shown along the negative *y*-coordinate direction with compatible arrows on other faces.

Step 3—Mark the Principal Axes

Draw the *x*–*y* coordinate system with its origin at *o*. Mark ℓ and *m* along the *x* and *y* axes as shown in Fig. 10-7*b*. For the principal stress (σ_1), locate the point (*p*) with the following *x* and *y* coordinates ($x = \ell_1$ and $y = m_1$) from Eq. (10-6*b*). The line joining

the origin o and point p is the first principal direction. Likewise, for the principal stress (σ_2), locate the point (q) with x and y coordinates ($x = \ell_2$ and $y = m_2$) from Eq. (10-6b). The line joining the origin o and point q is the second principal direction. The principal axes are op and oq. Draw the block A–B–C–D with point p as the midpoint of the face BC and q as the middle of face DC. Line oq should be normal to the face DC, and line op normal to the face BC.

Step 4—Mark the Principal Stresses

The first principal stress ($\sigma_1 = 176.7$) is along the line op, and it is tensile. The second principal stress ($\sigma_2 = -516.7$) is along the line oq, and it is compressive. There is no shear stress along the principal axis.

10.5 Mohr's Circle for Plane Stress

Otto Mohr in 1882 suggested a graphical method to calculate principal stress. This method is based on the first two formulas given in Eq. (10-3g). The two formulas are rearranged to obtain

$$\sigma'_x(\theta) - \frac{\sigma_x + \sigma_y}{2} = \frac{\sigma_x - \sigma_y}{2}\cos 2\theta + \tau \sin 2\theta$$

$$\tau'(\theta) = -\frac{\sigma_x - \sigma_y}{2}\sin 2\theta + \tau \cos 2\theta \tag{10-7a}$$

Square both equations, add, and simplify to obtain

$$\left(\sigma'_x(\theta) - \frac{\sigma_x + \sigma_y}{2}\right)^2 + \tau'(\theta)^2 = \left(\frac{\sigma_x - \sigma_y}{2}\right)^2 + \tau^2 \tag{10-7b}$$

Define an average stress (σ_a) and a radius (R) as

$$\sigma_a = \frac{\sigma_x + \sigma_y}{2}$$

$$R^2 = \left(\frac{\sigma_x - \sigma_y}{2}\right)^2 + \tau^2 \tag{10-7c}$$

Equation (10-7b) is rewritten using the average stress and radius to obtain

$$\left(\sigma'_x - \sigma_a\right)^2 + \tau'^2 = R^2 \tag{10-8}$$

Equation 10-8 represents the equation of a circle in the two dimensions. Here, the x-axis is σ'_x, the y-axis is τ', and R is the radius of the circle. The origin is located along the x-axis at a specified stress average ($x = \sigma_a$, $y = 0$). This Mohr circle provides the information that we

have derived analytically. Mohr's circle for a given stress state (σ_x, σ_y, τ) is constructed in the following steps.

Step 1—Mark the Axes

Consider an arbitrary point (O) as the origin of the coordinate system. The x-coordinate represents the normal stress (σ'_x) as shown in Fig. 10-8. The y-coordinate represents the shear stress (τ') in the same face, but traditionally this coordinate is marked downward. The angle of rotation (2θ) is positive when it is in the counterclockwise direction. The Mohr circle uses twice the rotation (2θ).

Step 2—Mark C as the Origin of the Mohr's Circle

The origin C lies in the x-coordinate axis at a specified distance [$\sigma_a = 0.5(\sigma_x + \sigma_y)$] from the origin O.

Step 3—Draw the Circle

The calculation of the radius R from Eq. (10-7c) is avoided. Instead, a point A is located on the circumference. This point corresponds to the given stress state (σ_x, σ_y, τ), which has zero rotation ($2\theta = 0$). Mark point A (σ_x, τ) with the x-coordinate as ($\sigma_x = OB$) and the y-coordinate as ($\tau = BA$). Draw a circle with an origin at C and a radius R equal to CA. The original x-coordinate axis is the line joining C and A, and the y-axis is perpendicular to it. The angle 2θ is measured from A in the counterclockwise direction. It is zero ($2\theta = 0$) at A.

The Mohr's circle provides the following information.

Radius (R) of the Mohr's circle: The radius is obtained by applying the Pythagorean theorem to the right triangle CBA.

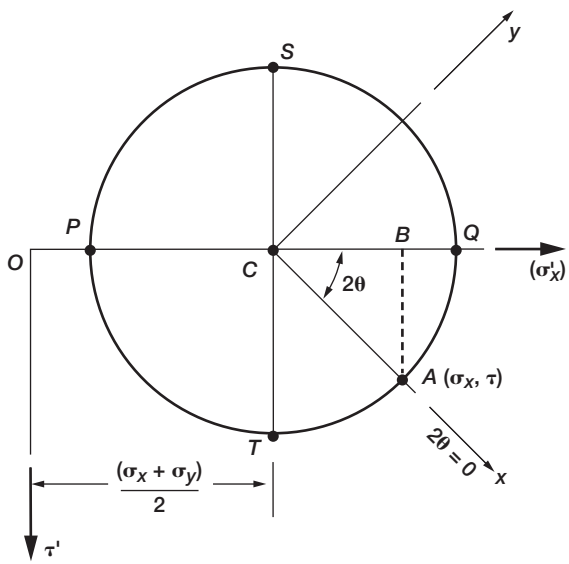

FIGURE 10-8 *Mohr's circle in two dimensions.*

$$CB = OB - OC = \sigma_x - \frac{\sigma_x + \sigma_y}{2} = \frac{\sigma_x - \sigma_y}{2}$$

$$BA = \tau$$

$$R^2 = CA^2 = CB^2 + AB^2 = \left(\frac{\sigma_x - \sigma_y}{2}\right)^2 + \tau^2 \tag{10-9a}$$

The radius is identical to that given in Eq. (10-7*c*).

Stress at location P: The two stress components at this location are

$$\sigma_p = \sigma_1 = \sigma'_x = \frac{\sigma_x + \sigma_y}{2} - \sqrt{\left(\frac{\sigma_x - \sigma_y}{2}\right)^2 + \tau^2}$$

$$\tau_p = 0$$

$$\tan 2\theta_p = \frac{AB}{BC} = \frac{\tau}{(\sigma_x - \sigma_y)/2} = \frac{2\tau}{(\sigma_x - \sigma_y)} \tag{10-9b}$$

Location *P* corresponds to the first principal stress (σ_1) with zero shear stress ($\tau = 0$).

Stress at location Q: The two stress components at this location are

$$\sigma_q = \sigma_2 = \sigma'_y = \frac{\sigma_x + \sigma_y}{2} + \sqrt{\frac{(\sigma_x - \sigma_y)^2}{2} + \tau^2}$$

$$\tau_q = 0$$

$$\tan(2\theta_q = 180^\circ + 2\theta) = \frac{2\tau}{(\sigma_x - \sigma_y)} \tag{10-9c}$$

Location *Q* corresponds to the second principal stress (σ_2) with zero shear stress ($\tau = 0$).

Angles θ_p and θ_q of the principal directions are calculated by using the trigonometric identity ($\tan 2\theta = \tan(180^\circ + 2\theta)$), or the angle ($\theta$) differs by 90°. If the principal stress at *P* is ($\sigma_p = \sigma_1$), with the orientation θ_p, then the second principal stress at *Q* is $\sigma_q = \sigma_2$, with the orientation $\theta_p + 90^\circ$. The principal stresses (σ_1 and σ_2) are oriented along mutually perpendicular directions.

Stress at location S: The location *S* and T in Fig. 10-8 correspond to the maximum shear stress. The magnitude of shear stress is equal to the radius *R*. Normal stress (σ_{ns}) is present, and its value is equal to the average stress [$\sigma_{ns} = \sigma_a = (\sigma_x + \sigma_y)/2$].

At location *S*, the stresses are

$$\tau_s = -\tau_{\max} = -R = -\sqrt{\frac{(\sigma_x - \sigma_y)^2}{2} + \tau^2}$$

$$\sigma_{ns} = \frac{(\sigma_x + \sigma_y)}{2}$$

$$2\theta_s = 2\theta q + 90$$

$$\theta_s = \theta_q + 45^\circ \tag{10-9d}$$

Stresses at location T are

$$\tau_T = \tau_{\max} = \sqrt{\left(\frac{\sigma_x - \sigma_y}{2}\right)^2 + \tau^2}$$

$$\sigma_{nt} = \frac{(\sigma_x + \sigma_y)}{2}$$

$$\theta_t = \theta_p + 45^\circ \tag{10-9e}$$

At location S, the angle θ_S exceeds the principal angle (θ_q) by $45^\circ(\theta_S = \theta_q + 45^\circ)$. Likewise, at location T, the angle θ_t exceeds the principal angle (θ_p) by $45^\circ(\theta_t = \theta_p + 45^\circ)$. The shear plane with maximum shear stress bisects the principal planes.

10.6 Properties of Principal Stress

There are six properties or attributes of the principal stress. These are stated first and then proved.

1. The principal directions are mutually perpendicular.
2. First invariant (I_1): The sum of normal stresses along mutually perpendicular planes is the first invariant.

$$I_1 = \sigma_x + \sigma_y = \sigma_1 + \sigma_2 = \text{constant}$$

3. Second invariant (I_2): The product of the normal stresses less the square of the shear stress is the second invariant.

$$I_2 = \sigma_x\sigma_y - \tau^2 = \sigma_1\sigma_2 = \text{constant}$$

4. The normal stresses attain maximum and minimum values along the principal axes. The first principal stress (σ_1) is the maximum normal stress, whereas the second principal stress (σ_2) is the minimum normal stress.
5. There is no shear stress ($\tau = 0$) in the principal planes.
6. The shear stress (τ) attains its maximum value in the plane that intersects the principal planes.

Property 1—Principal Directions Are Mutually Perpendicular

Let $X^{\sigma 1}$ and $X^{\sigma 2}$ be the two principal directions. The directions are mutually perpendicular provided that their dot product is zero ($\{X^{\sigma 1}\}^T\{X^{\sigma 2}\} = 0$). The property is verified

by direct substitution using the two stress invariants, $(\sigma_x + \sigma_y = \sigma_1 + \sigma_2)$ and $(\sigma_x\sigma_y - \tau^2 = \sigma_1\sigma_2)$, which are proved subsequently. The two directions are obtained using Eq. (10-5*j*).

$$\{X^{\sigma_1}\} = \begin{Bmatrix} \dfrac{-\tau m_1}{(\sigma_x - \sigma_1)} \\ m_1 \end{Bmatrix}$$

$$\{X^{\sigma_2}\} = \begin{Bmatrix} \dfrac{-\tau m_2}{(\sigma_x - \sigma_2)} \\ m_2 \end{Bmatrix}$$

$$\{X^{\sigma_1}\}^T\{X^{\sigma_2}\} = \frac{\tau^2 m_1 m_2}{(\sigma_x - \sigma_1)(\sigma_x - \sigma_2)} + m_1 m_2$$

$$\begin{aligned}(\sigma_x - \sigma_1)(\sigma_x - \sigma_2) &= \sigma_x^2 + \sigma_1\sigma_2 - \sigma_x(\sigma_1 + \sigma_2) \\ &= \sigma_x^2 + \sigma_x\sigma_y - \tau^2 - \sigma_x\left(\sigma_x + \sigma_y\right) \\ &= -\tau^2\end{aligned}$$

$$\{X^{\sigma_1}\}^T\{X^{\sigma_2}\} = -\frac{\tau^2 m_1 m_2}{\tau^2} + m_1 m_2 = 0 \qquad (10\text{-}10a)$$

The principal directions ($X^{\sigma 1}$ and $X^{\sigma 2}$) are orthogonal because their dot product is zero.

Property 2—First Invariant

The invariant $(I_1 = \sigma_x + \sigma_y = \sigma_1 + \sigma_2)$ is proved by direct substitution using Eq. (10-3*g*). Consider the normal stresses ($\sigma'_x(\theta)$ and $\sigma'_y(\theta)$) at an arbitrary orientation with an angle θ. The sum of the normal stress from Eq. (10-3*g*) is

$$\begin{aligned}\sigma'_x(\theta) + \sigma'_y(\theta) &= \left\{\frac{\sigma_x + \sigma_y}{2} + \frac{\sigma_x - \sigma_y}{2}\cos 2\theta + \tau \sin 2\theta\right\} \\ &\quad + \left\{\frac{\sigma_x + \sigma_y}{2} - \frac{\sigma_x - \sigma_y}{2}\cos 2\theta - \tau \sin 2\theta\right\} \\ &= \left(\sigma_x + \sigma_y\right)\end{aligned}$$

$$\sigma'_x(\theta) + \sigma'_y(\theta) = \left(\sigma_x + \sigma_y\right) = (\sigma_1 + \sigma_2) \qquad (10\text{-}10b)$$

Angle θ, being arbitrary, encompasses all angles, including the orientation of the principal axes. Therefore, the sum of the normal stresses along the mutually perpendicular planes is an invariant.

Property 3—Second Invariant

The invariant $(I_2 = \sigma_x\sigma_y - \tau^2 = \sigma_1\sigma_2)$ is also proved by direct substitution using Eq. (10-3*g*). Consider the stresses $\sigma'_x(\theta)$, $\sigma'_y(\theta)$, and $\tau'(\theta)$ at an arbitrary orientation θ. The invariant becomes

$$\sigma'_x\sigma'_y - \tau'^2 = \left(\frac{\sigma_x + \sigma_y}{2} + \frac{\sigma_x - \sigma_y}{2}\cos 2\theta + \tau \sin 2\theta\right)\left(\frac{\sigma_x + \sigma_y}{2} - \frac{\sigma_x - \sigma_y}{2}\cos 2\theta - \tau \sin 2\theta\right)$$

$$- \left(-\frac{\sigma_x - \sigma_y}{2}\sin 2\theta + \tau \cos 2\theta\right)^2$$

$$= \frac{1}{4}\left\{(\sigma_x + \sigma_y)^2 - (\sigma_x - \sigma_y)^2\right\} - \tau^2 = \sigma_x\sigma_y - \tau^2$$

or $$\sigma'_x\sigma'_y - \tau'^2 = \sigma_x\sigma_y - \tau^2 \qquad (10\text{-}10c)$$

Because angle θ is arbitrary, the product of the normal stresses less the square of the shear stress is an invariant. It is also equal to the determinant of the stress matrix $[\tau]$ in Eq. (10-1).

Property 4—The Normal Stresses Attain Maximum and Minimum Values along the Principal Axes

This is evident from an observation of the Mohr's circle in Fig. 10-8. Every point of the circle *PSQT* represents a stress state consisting of a normal stress and a shear stress. The stress has the maximum value at location *Q*, which is the first principal stress (σ_1). The normal stress reaches the minimum value at location *P*, and this corresponds to the second principal stress (σ_2).

Property 5—Shear Stress Is Zero in the Principal Plane

The principal stress occurs at locations *P* and *Q* in the Mohr's circle shown in Fig. 10-8. The *y*-coordinate, which represents the shear stress, is zero ($\tau = 0$) at both locations (*P* and *Q*). In other words, there is no shear stress ($\tau = 0$) in the principal planes.

Property 6—Inclination of Shear Stress Plane

Shear stress peaks at *S* and at *T*. From the Mohr's circle, it is easy to determine the angles for the four locations (*Q*, *P*, *S*, *T*) with respect to the original coordinate system (*x*, *y*).

Q corresponds to an angle 2θ with respect to *x*-axis.
P is at angle $180° + 2\theta$
S is at angle $90° + 2\theta$
T is at angle $270° + 2\theta$

The shear plane at *S* bisects the normal stress planes that correspond to *P* and *Q*, respectively, because *S* is located at a midangular distance from *P* or *Q*. Likewise, *T* is the midpoint between *P* and *Q*.

A right-angled triangle, also called the stress triangle, shown in Fig. 10-9, can be used to calculate the angular orientation of the principal plane. Shear stress (τ) represents the perpendicular or vertical side *AB*. The base *AC* is: $(\sigma_x - \sigma_y)/2$. The diagonal *R* becomes the maximum shear stress. The included angle (2θ) is equal to twice the orientation of the principal plane. The trigonometric ratios can be obtained as:

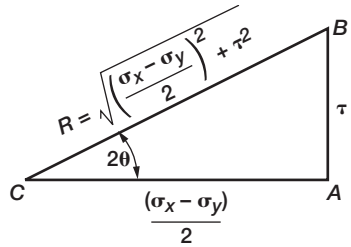

FIGURE 10-9 *Stress triangle.*

$$\sin 2\theta = \frac{\tau}{R}$$

$$\cos 2\theta = \frac{\sigma_x - \sigma_y}{2R}$$

$$R = \sqrt{\left(\frac{\sigma_x - \sigma_y}{2}\right)^2 + \tau^2} \tag{10-10d}$$

Substitution of the trigonometric ratios into Eq. (10-3g) also yields the principal stresses.

EXAMPLE 10-4

Draw Mohr's circle for the following stress tensors marked in Fig. 10-10, and interpret the results.

Case 1: Tension (σ_0, 0, 0), Fig. 10-10a
Case 2: Compression ($-\sigma_0$, 0, 0), Fig. 10-10b
Case 3: Pure shear (0, 0, τ_0), Fig. 10-10c
Case 4: Biaxial tension (σ_{x0}, σ_{y0}, 0), Fig. 10-10d
Case 5: Equal tension (σ_0, σ_0, 0), Fig. 10-10e
Case 6: Equal tension and compression (σ_0, $-\sigma_0$, 0), Fig. 10-10f
Case 7: Equal stress (σ_0, σ_0, σ_0), Fig. 10-10g.

Solution for Case 1—Tension (σ_0, 0, 0)

The average stress $\sigma_a = (\sigma_0 + 0)/2 = \sigma_0/2$. Consider the σ'_x and τ' plane with origin O. Mark the origin of the Mohr's circle C on the σ'_x axis at a distance of $\sigma_0/2$ from O. Mark A with coordinates $\sigma'_x = \sigma_0$ and $\tau' = 0$. Draw a Mohr's circle with center C and radius CA. Mark P, S, and T in the Mohr's circle. Points A and Q coincide, and the first principal stress is $\sigma_1 = \sigma_0$. It has no inclination ($\theta_1 = 0$). Stress σ_x is the principal stress. Points O and P coincide, and the second principal stress is zero ($\sigma_2 = 0$). The maximum shear ($\tau_{\max} = \sigma_0/2$) has a 45° inclination to the x-coordinate axis ($2\theta_s = 90°$).

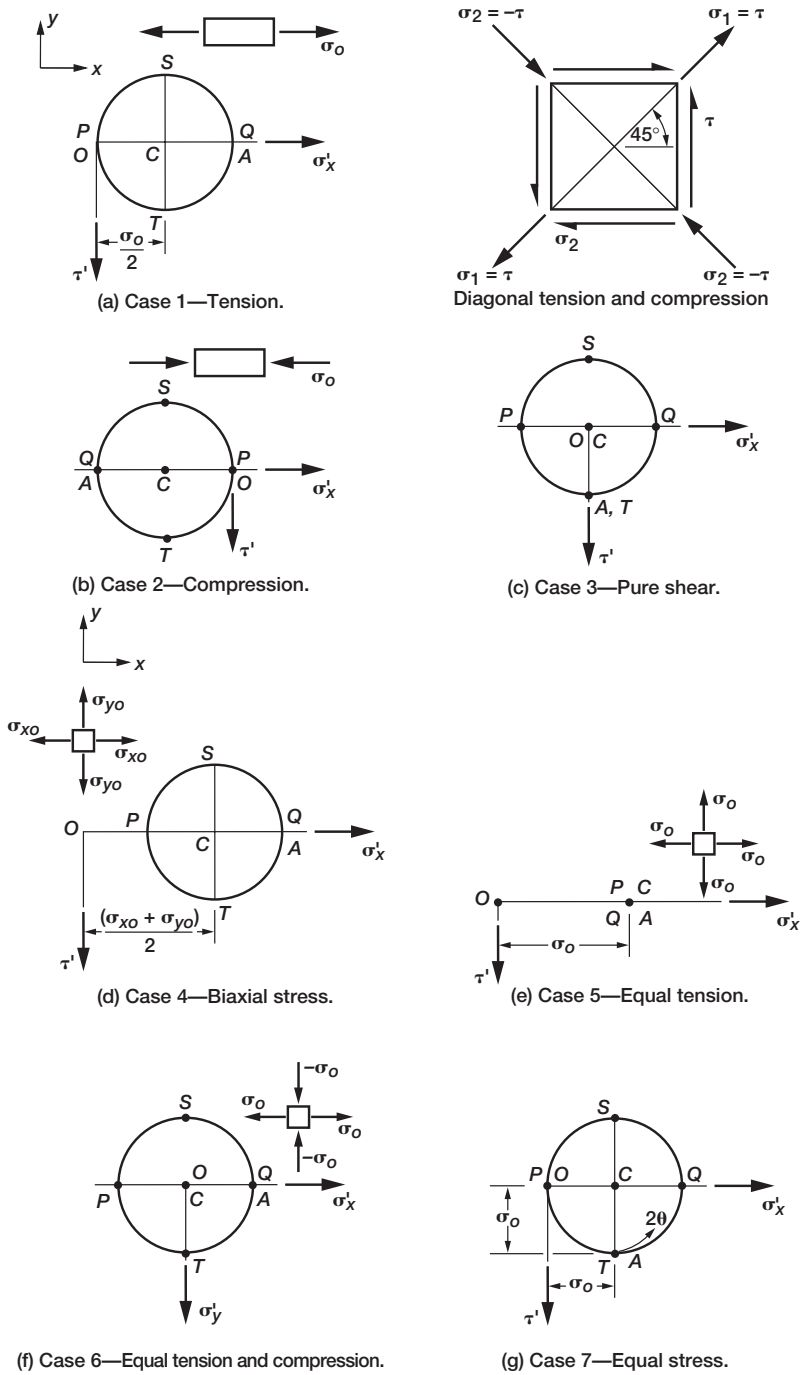

FIGURE 10-10 *Mohr's circle for different stress conditions.*

First principal stress: $\sigma_1 = \sigma_x = \sigma_0$, with zero inclination ($\theta_1 = 0$)
Second principal stress is zero, $\sigma_2 = 0$
Maximum shear stress is half the principal stress ($\tau_{max} = \sigma_0/2$), and it has a 45°inclination to the x-coordinate axis

Solution for Case 2—Compression ($-\sigma_0$, 0, 0)

The average stress $\sigma_a = (-\sigma_0 + 0)/2 = -\sigma_0/2$. Mark the origin of the Mohr's circle C on the negative σ'_x axis at a distance $-\sigma_0/2$ from O. Mark A with coordinates $\sigma'_x = -\sigma_0$ and $\tau' = 0$. Draw a Mohr's circle with center C and radius CA. Mark P, S, and T in the Mohr's circle.

Points A and Q coincide, and the first principal stress is $\sigma_1 = -\sigma_0$. It has no inclination ($\theta_1 = 0$). Stress σ_x is the principal stress. Points O and P coincide, and the second principal stress is zero ($\sigma_2 = 0$). The maximum shear ($\tau_{max} = \sigma_0/2$) has a 45° inclination to the x-coordinate axis ($2\theta_s = 90°$).

First principal stress: $\sigma_1 = \sigma_x = -\sigma_0$, with zero inclination ($\theta_1 = 0$)
Second principal stress is zero, $\sigma_2 = 0$
Maximum shear stress is half the principal stress ($\tau_{max} = \sigma_0/2$), and it has a 45° inclination to the x-coordinate axis

Solution for Case 3—Pure Shear (0, 0, τ_0)

The average stress is zero ($\sigma_a = 0$). The origin of Mohr's circle (C) coincides with the origin (O) of the σ'_x and τ' plane.

Coordinate of point A is (0, τ). Draw the Mohr's circle with origin at C and radius CA. The principal stresses at P and Q are equal in magnitude and opposite in sign ($\sigma_1 = \tau_0$ at Q and $\sigma_2 = -\tau_0$ at P). The maximum shear stress is equal to the given stress ($\tau_{max} = \tau$). This stress state is depicted on a differential block in Fig. 10-10c. The leading diagonal, corresponding to the first principal stress, is stretched because it is tensile. The other diagonal with the second principal stress is compressed because it is compressive. Orientation of the first principal plane is $\theta_1 = 45°$.

First principal stress: $\sigma_1 = \tau_0$, with a 45° inclination ($\theta_1 = 45°$)
Second principal stress: $\sigma_2 = -\tau_0$
Maximum shear stress is equal to the shear stress ($\tau_{max} = \tau_0$)

Solution for Case 4—Biaxial Tension (σ_{x0}, σ_{y0}, 0)

The average stress is $\sigma_a = (\sigma_{x0} + \sigma_{y0})/2$. Mark the origin of the Mohr's circle C on the σ'_x axis at a distance σ_a from O. Mark A with coordinates ($\sigma'_x = \sigma_x$ and $\tau' = 0$) on the σ'_x axis. Draw a Mohr's circle with center C and radius CA. Mark P, Q, S, and T in the Mohr's circle. Points A and Q coincide, and the first principal stress is $\sigma_1 = \sigma_{0x}$. It has no inclination ($\theta_1 = 0$). The second principal stress at P is $\sigma_y = \sigma_{y0}$. The value of the maximum shear stress at S and T is $\tau_{max} = (\sigma_{x0} - \sigma_{y0})/2$ being the radius of Mohr's circle.

First principal stress: $\sigma_1 = \sigma_{x0}$, with a zero inclination ($\theta_1 = 0$)
Second principal stress: $\sigma_2 = \sigma_{y0}$
Maximum shear stress is equal to one half the difference of the two normal stresses ($\tau_{max} = (\sigma_{x0} - \sigma_{y0}/2)$

Solution for Case 5—Equal Tension (σ_0, σ_0, 0)

This case can be obtained from the solution for Case 4 by setting $\sigma_{x0} = \sigma_{y0} = \sigma_0$. The average stress ($\sigma_a = \sigma_0$) is equal to the applied stress. Mark the origin of the Mohr's circle C on the σ'_x axis at a distance σ_0 from O. Point A coincides with C ($\sigma'_x = \sigma_0$ and $\tau' = 0$). This Mohr's circle degenerates to a point with a zero radius. Points P and Q also coincide with C. The shear stress is zero for every orientation. The normal stress is equal to the applied stress ($\sigma_x = \sigma_y = \sigma_0$) at every orientation.

First principal stress: $\sigma_1 = \sigma_0$
Second principal stress: $\sigma_2 = \sigma_0$
There is no shear stress

Solution for Case 6—Equal Tension and Compression (σ_0, $-\sigma_0$, 0)

The average stress is zero ($\sigma_a = \sigma_0 - \sigma_0 = 0$). The origin of the Mohr's circle C coincides with O on the σ'_x axis. Mark A with coordinates σ_0 and $\tau = 0$ on the σ'_x axis. Draw a Mohr's circle with center C and radius CA. Mark P, Q, S, and T in the Mohr's circle. The principal stresses are equal in magnitude but opposite in sign ($\sigma_1 = \sigma_0$ with $\theta_1 = 0°$, and $\sigma_2 = -\sigma_0$ with $\theta_2 = 90°$). In other words, the principal stresses in magnitude are equal to the applied stresses. The maximum shear stress ($\tau_{max} = \sigma_0$) is equal to the principal stress and occurs at a midangular distance from the principal stresses.

First principal stress: $\sigma_1 = \sigma_0$ with a zero inclination ($\theta_1 = 0$)
Second principal stress: $\sigma_2 = -\sigma_0$
The maximum shear stress is ($\tau_{max} = \sigma_0$)

Solution for Case 7—Equal Stress (σ_0, σ_0, σ_0)

The average stress ($\sigma_a = (\sigma_0 + \sigma_0)/2 = \sigma_0$) locates point C. Point A is marked with coordinates $\sigma'_x = \sigma_0$ and $\tau' = \sigma_0$. Draw a Mohr's circle with center C and radius CA. Mark P, Q, S, and T in the Mohr's circle. The principal stress at Q is $\sigma_1 = 2\sigma_0$ with $\theta_1 = 45°$, at P it is $\sigma_2 = 0$ with θ_2. The maximum shear stress is $\tau_{max} = \sigma_0$, and the angle of the shear plane is $\theta_s = 90°$.

First principal stress at Q: $\sigma_1 = 2\sigma_0$ with a zero inclination ($\theta_1 = 45°$)
Second principal stress at P: $\sigma_2 = 0$
The maximum shear stress is ($\tau_{max} = \sigma_0$)

10.7 Stress in Pressure Vessels

Pressure vessels are used to store liquid and gas under pressure. Spherical and cylindrical tanks are examples of pressure vessels that are widely used in industry. The thickness (t) of such vessels is much smaller than their length or diameter, as shown in Fig. 10-11. Adequate formulas for pressure analysis can be derived if we make two simplifying assumptions.

1. The weight of the thin-walled pressure vessel is small compared to the pressure load and it is neglected.
2. The support (boundary) conditions allow free deformations of the pressure vessel. The pressure vessel can undergo unrestricted deformation in a breathing type of mode.

The assumptions do not impose undue restrictions on the formulas. The stress state in the wall of the pressure vessel becomes predominately two-dimensional, or in a membrane stress state. The stress in the pressure vessel is easily determined from equilibrium considerations. Deformation is back-calculated from the stress.

10.8 Stress in a Spherical Pressure Vessel

Consider a thin-walled spherical shell of thickness t and radius R that carries an internal pressure of p_0, as shown in Fig. 10-12a. The pressure vessel is made of an elastic material with Young's modulus E and Poisson's ratio ν. The wall of the vessel resists the pressure by developing a membrane stress state. The stress state simplifies to an equal biaxial stress state because of spherical symmetry. The shear stress is zero, and the normal stresses are equal ($\sigma_x = \sigma_y = \sigma$ and $\tau_{xy} = 0$). The single stress (σ) is calculated from the equilibrium equation written for the hemisphere shown in Fig. 10-12a. A spherical coordinate system is the preferred choice in its analysis. Here, however, a rectangular coordinate (x and y) system

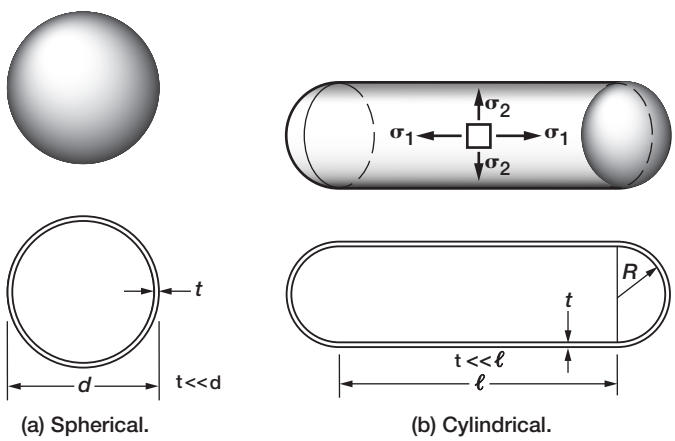

FIGURE 10-11 *Thin-walled pressure vessels.*

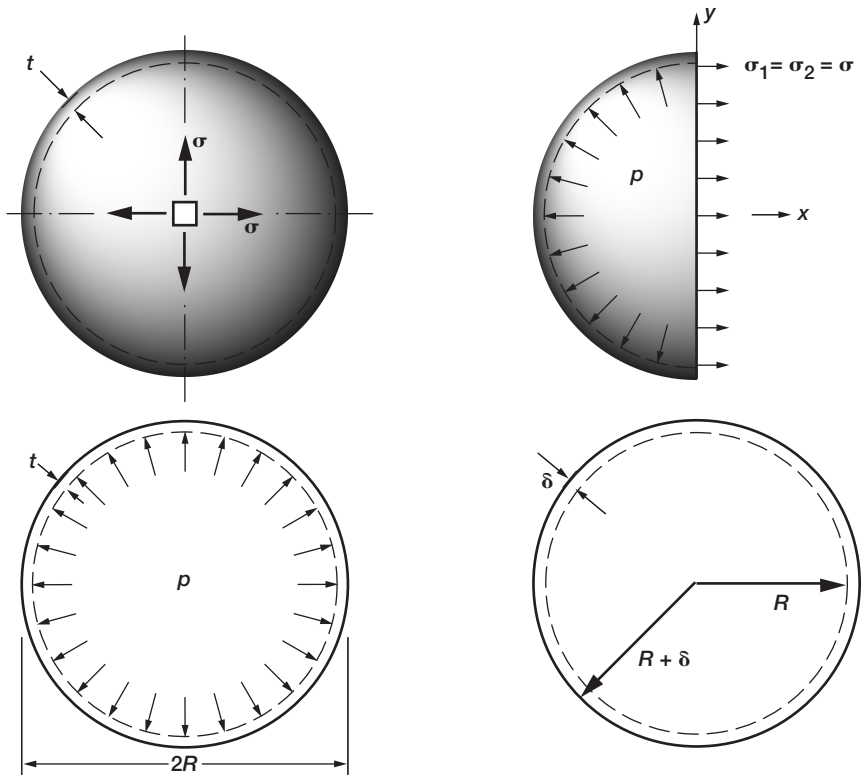

(a) Sphere under internal pressure.

(b) Equilibrium of hemisphere.

FIGURE 10-12 *Stress in a spherical pressure vessel.*

is sufficient for the analysis. The coordinates are considered along the perpendicular great diameters as shown in Fig. 10-12*b*.

Along the x-coordinate direction in Fig. 10-12*b*, the force due to the pressure load (F^p) is in equilibrium with the internal force (F^σ) due to the membrane stress, as ($F^p + F^\sigma = 0$). The pressure load (F^p) is equal to the product of the area of the disk (πR^2) and $-p$ because the pressure is in the negative x-direction.

$$F^p = -\pi R^2 p \tag{10-11a}$$

The induced force (F^σ) is equal to the product of the area of the circumferential strip ($2\pi Rt$) and the stress (σ). The EE yield

$$F^\sigma = 2\pi Rt\sigma$$
$$F^p + F^\sigma = -\pi R^2 p + 2\pi Rt\sigma = 0$$

$$\sigma = \frac{pR}{2t}$$

$$\sigma_x = \sigma_1 = \sigma_y = \sigma_2 = \sigma = \frac{pR}{2t} \tag{10-11b}$$

The induced stress (σ) is the same in any direction, and there is no shear stress, as shown in Example 10-4, Case 5–Equal Tension.

The sphere expands under pressure from the original radius R to a slightly increased radius ($R + \delta$). Consider a strip with a width of unity along a great circle. Its deformation (δ_c) is calculated as the difference between its deformed and undeformed lengths.

$$\delta_c = 2\pi(R + \delta) - 2\pi R = 2\pi\delta \tag{10-12a}$$

Strain is obtained as the ratio of the deformation to the initial length.

$$\varepsilon_1 = \frac{\delta_c}{2\pi R} = \frac{2\pi\delta}{2\pi R} = \frac{\delta}{R} \tag{10-12b}$$

Hooke's law relates stress and strain through the modulus (E) and the Poisson's ratio (v) as

$$\varepsilon_1 = \frac{1}{E}(\sigma_1 - v\sigma_2) = \frac{1 - v}{E}\sigma \tag{10-12c}$$

Algebraic manipulation yields the displacement in terms of the pressure load.

$$\varepsilon_1 = \frac{\delta}{R} = \frac{1 - v}{E}\sigma$$

$$\delta = \frac{(1 - v)}{E}\sigma R$$

$$\delta = \left(\frac{1 - v}{E}\right)\frac{pR}{2t}R$$

$$\delta = \frac{1 - v}{2Et}pR^2$$

$$\varepsilon = \varepsilon_1 = \frac{1 - v}{2Et}pR \tag{10-12d}$$

Stress in the spherical pressure vessel can be calculated from Eq. (10-11a), and displacement can be calculated from Eq. (10-12d).

10.9 Stress in a Cylindrical Pressure Vessel

Consider a thin cylindrical vessel of thickness t and radius R that carries an internal pressure of p, as shown in Fig. 10-13a. The structure is made with end caps, which can be hemispherical, trapezoidal, or a combination of these. The elementary analysis ignores the cap shape, and the stress is obtained in the cylindrical wall. The vessel is made of an isotropic material with modulus E and Poisson's ratio ν. The wall of the vessel resists the pressure by developing a membrane stress state. The stress along the circumferential or hoop direction is $\sigma_\theta = \sigma_1$. Along the longitudinal direction, it is $\sigma_x = \sigma_2$, and there is no shear stress ($\tau_{xy} = 0$) because of symmetry.

The stress components (σ_1 and σ_2) are marked on an elemental strip along a great circle in Fig. 10-13b. The stresses (σ_1 and σ_2) are calculated from the EE for the free bodies shown in Figs. 10-13c and 10-13d.

Along the transverse, or θ-coordinate, direction, as shown in Fig. 10-13c, the force due to the pressure load (F^{p_θ}) is in equilibrium with the internal force (F^{σ_1}) because of the membrane stress, as: ($F^{p_\theta} + 2F^{\sigma_1} = 0$). The coefficient 2 accounts for force (F^{σ_1}) acting on two longitudinal surfaces.

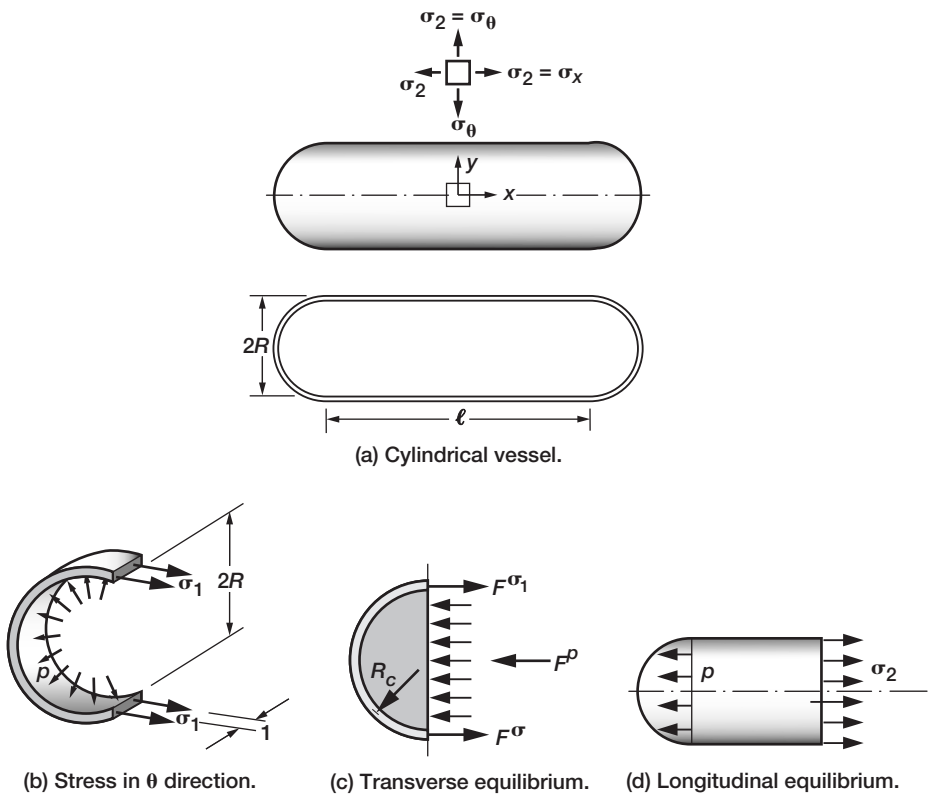

FIGURE 10-13 *Stress in a cylindrical pressure vessel.*

The internal force (F^{σ_1}) is

$$F^{\sigma_1} = \sigma_1 t \tag{10-13a}$$

The pressure load (F^{p_θ}) is

$$F^{p_\theta} = -2Rp \tag{10-13b}$$

The transverse EE yield

$$2F^{\sigma_1} + F^{p_\theta} = 0 \tag{10-13c}$$

$$2\sigma_1 t - 2Rp = 0$$

$$\sigma_1 = \frac{Rp}{t} \tag{10-13d}$$

The circumferential stress, also referred to as the hoop stress (σ_1), is the product of the radius and the pressure divided by the thickness.

Along the longitudinal, or x-coordinate, direction shown in Fig. 10-13d, the force because of the pressure load (F^{p_x}) is in equilibrium with the internal force (F^{σ_2}) due to the membrane stress, as ($F^{p_x} + F^{\sigma_2} = 0$).

The internal force (F^{σ_2}) is

$$F^{\sigma_2} = 2\pi R\sigma_2 t \tag{10-14a}$$

The pressure load (F^{p_x}) is

$$F^{p_x} = -\pi R^2 p \tag{10-14b}$$

The longitudinal EE yield

$$F^{\sigma_2} + F^{p_x} = 0 \tag{10-14c}$$

$$2\pi R\sigma_2 t - \pi R^2 p = 0$$

$$\sigma_2 = \frac{Rp}{2t} \tag{10-14d}$$

The hoop stress (σ_1) is equal to half the product of the radius and the pressure divided by the thickness.

The cylinder expands under pressure from the original radius (R) to a slightly increased radius ($R + \delta$). Consider a strip of width unity along a great circle. The hoop strain ($\varepsilon_1 = \delta/R$) is identical to that given in Eq. (10-12b). Stress and strain related through Hooke's law can be written as

$$\varepsilon_1 = \frac{(\sigma_1 - \nu\sigma_2)}{E} = \frac{Rp}{2Et}(2-\nu) = \frac{\delta}{R} \tag{10-15a}$$

$$\delta = \frac{R^2 p}{2Et}(2-\nu) \tag{10-15b}$$

Stress in a cylindrical pressure vessel can be calculated from Eqs. (10-13*d*) and (10-14*d*). The radial displacement is obtained from Eq. (10-15*b*).

The biaxial stress state ($\sigma_1 = pR/t$ and $\sigma_2 = pR/2t$) induces a maximum shear stress, ($\tau_{max} = (\sigma_1 - \sigma_2)/2$, at a 45° inclination:

$$\tau_{max} = \frac{\sigma_1 - \sigma_2}{2} = \frac{pR}{4t} \tag{10-16}$$

Both the cylindrical and the spherical vessels are in biaxial stress states. In the spherical vessel, the stress components are equal ($\sigma_1 = \sigma_2 = pR/2t$) and there is no in-plane shear stress. (However, a three-dimensional analysis would predict the maximum shear stress as $\tau_{max} = \sigma_1/2 = \sigma_2/2 = pR/4t$.) In a cylindrical vessel, hoop stress is twice the longitudinal stress ($\sigma_1 = pR/t$ and $\sigma_2 = pR/2t$), and the maximum shear stress is $\tau_{max} = pR/4t$. The formulas for radial displacement for spherical and the cylindrical shells are similar except for the coefficient: ($\delta = C(R^2p/2Et)$. The coefficient for sphere is: $C^{spherical} = 1 - \nu$. For the cylinder it is: $C^{cylindrical} = 2 - \nu$. The coefficient accommodates the difference in the stress state of the pressure vessels. The pressure vessel formulas are summarized in Table 10-1.

TABLE 10-1 Pressure Vessel Formulas

Response	*Spherical Vessel*	*Cylindrical Vessel*	*Parameters*
σ_x	$\frac{pR}{2t}$	$\frac{pR}{2t}$	p = pressure
σ_y	$\frac{pR}{2t}$	$\frac{pR}{t}$	R = radius
τ_{xy}	0	–	t = thickness
σ_1	$\frac{pR}{2t}$	$\frac{pR}{t}$	E = Young's modulus
σ_2	$\frac{pR}{2t}$	$\frac{pR}{2t}$	ν = Poisson's ratio
τ_{max}	0 – (in-plane) 3-D analysis: $pR/4t$	$\frac{pR}{4t}$	
δ	$\frac{(1-\nu)}{2Et}pR^2$	$\frac{(2-\nu)}{2Et}pR^2$	

EXAMPLE 10-5

A spherical pressure vessel made of steel has a radius of 100 in. and a wall thickness of 0.25 in. It has an internal pressure of 100 psi. Calculate its stress state and the change in its diameter.

A cylindrical pressure vessel made of steel has a radius of 100 in. and a wall thickness of 0.25 in. It has an internal pressure of 100 psi. Calculate its stress state and the change in its diameter.

Compare the solution for the two vessels.

Solution for the Spherical Vessel

The stress in the vessel is calculated from Eq. (10-11*b*).

$$R = 100\,\text{in.}$$

$$t = 0.25\,\text{in.}$$

$$p = 100\,\text{psi}$$

$$\sigma_x = \sigma_y = \sigma_1 = \sigma_2 = \frac{pR}{2t} = 20\,\text{ksi} \tag{10-17a}$$

The radial expansion is calculated from Eq. (10-12*d*).

$$E = 30 \times 10^6\,\text{psi (steel)}$$

$$v = 0.3$$

$$\delta = \frac{1 - v}{2Et} pR^2 = 0.046\,\text{in.} \tag{10-17b}$$

Solution for the Cylindrical Tank

The stress in the vessel is calculated from Eqs. (10-13*d*), (10-14*d*), and (10-16).

$$\sigma_x = \sigma_1 = \frac{Rp}{t} = 40\,\text{ksi}$$

$$\sigma_y = \sigma_2 = \frac{Rp}{2t} = 20\,\text{ksi}$$

$$\tau_{\max} = \frac{Rp}{4t} = 10\,\text{ksi} \tag{10-17c}$$

The radial expansion is calculated from Eq. (10-15*b*).

$$\delta = \frac{R^2 p}{2Et}(2 - v) = 0.113\,\text{in.} \tag{10-17d}$$

Material, radius, thickness, and pressure load are identical for the two tank types. The spherical tank induces equal biaxial tension of 20 ksi, and the tank walls are free from in-plane shear stress. Three-dimensional analysis would predict a shear stress of 10 ksi. Its radius expands by 0.046 in. The cylindrical tank induces a 40-ksi hoop-stress and a 20-ksi longitudinal stress. It also induces a shear stress of 10 ksi. The radial displacement of the cylindrical tank at 0.113 in. is 2.46 times (0.113 to 0.046) that of the spherical tank. The cylindrical tank is more severely stressed than the spherical tank. The shape of the spherical tank is more efficient than that of the cylindrical tank because of lower induced stress and displacement. The use of the cylindrical tank in industry is more prevalent because of functional and construction requirements; also, stress is not dependent on its length dimension.

Problems

Use the properties of material given in Tables A5-1 and A5-2 to solve the problems.

10-1 Label with signs the four stress states shown in Fig. P10-1*a–d*. Indicate inconsistencies, if any.

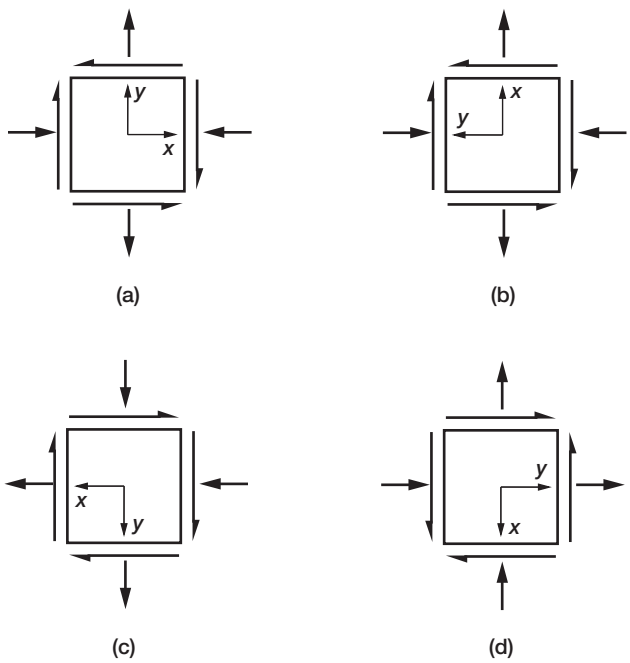

FIGURE P10-1

10-2 For the plane stress states shown in Fig. P10-2 and Table P10-2 determine:

The principal stresses and directions. Depict solution on an element.
The maximum and minimum shear stresses as well as associated normal stresses and mark on an element.

For Examples (1, 3, 5, 7, 9) follow the eigenvalue approach.
For Examples (2, 4, 6, 8, 10) use Mohr's graphical method.
Verify solutions for Examples (1, 4, 7, 10) by back-substituting into the formulas.

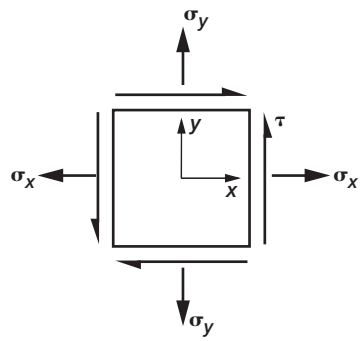

FIGURE P10-2

TABLE P10-2 Plane Stress State

Problem Number	σ_x	σ_y	τ
10–2–1	5000 psi	0.0	3000 psi
10–2–2	0.0	5000 psi	3000 psi
10–2–3	0.0	0.0	−2000 psi
10–2–4	−5000 psi	5000 psi	5000 psi
10–2–5	5000 psi	4000 psi	−2000 psi
10–2–6	20 MPa	−30 MPa	15 MPa
10–2–7	−20 MPa	30 MPa	−15 MPa
10–2–8	5 MPa	7 MPa	4 MPa
10–2–9	0	6 MPa	2 MPa
10–2–10	2 MPa	6 MPa	15 MPa

10-3 For the plane stress states shown in Fig. P10-3 and Table P10-3 determine the stresses acting on an element oriented at an angle (θ). Verify analytical solution by constructing a Mohr's circle. Consider three orientations ($\theta = \pi/4$, $\theta = \pi/3$, $\theta = \pi/2$) and the four stress states given in the table.

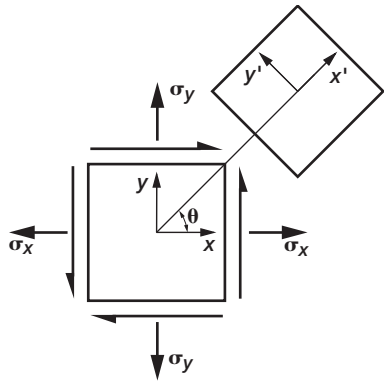

FIGURE P10-3

TABLE P10-3 Stresses in Two Dimensions

Problem Number	σ_x	σ_y	τ
10–3–1	4000 psi	0.0	5000 psi
10–3–2	−8000 psi	−5000 psi	4000 psi
10–3–3	25 MPa	20 MPa	−15 MPa
10–3–4	8 MPa	11 MPa	6 MPa

10-4 For the stress states in Problem 10-3 with orientation ($\theta = 0$ and $\theta = \pi/4$) calculate the values for the stress invariants and show that they do not change with respect to a change in orientation by an angle θ.

10-5 The stress (σ_x and τ) in the midspan of the cantilever shown in Fig. P10-5 can be calculated from the beam formulas.

$$\sigma = \sigma_x = \mathrm{My/I}$$
$$\tau = \tau_{xy} = \mathrm{VQ/It}$$

Use the following numerical values for the parameters.

Length ($\ell = 72$ in.), depth ($h = 12$ in.), thickness ($t = 0.5$ in.)
Moment of inertia ($I = td^3/12$), moment of area at a distance y from the neutral axis [$Q = t(h^2/8 - y^2/2)$]
Load ($P = 1$ kip), moment ($M = P\ell/2$), shear force ($V = -P$)

Calculate the normal stress and the shear stress at the following four locations along the beam depth.

At neutral axis ($y = 0$) in the midspan location ($x = \ell/2$)
At a depth ($y = h/6$) in the midspan location ($x = \ell/2$)
At a depth ($y = h/3$) in the midspan location ($x = \ell/2$)
At top fiber ($y = h/2$) in the midspan location ($x = \ell/2$)

Calculate the principal stresses and orientation at each of the four depth locations.

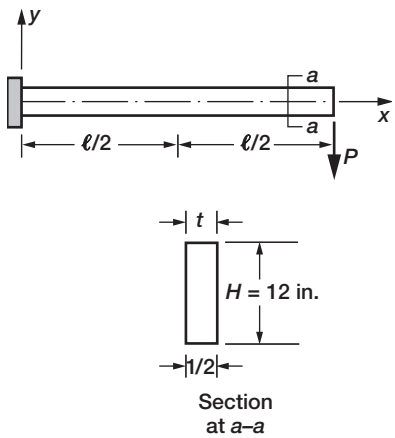

FIGURE P10-5

10-6 Calculate the stress and strain states as well as the displacement in the following pressure vessels.

A spherical steel tank with a 12 in. inside diameter and 0.1 in. wall thickness and an internal pressure of 3000 psi.

A spherical aluminum pressure vessel with a 200 mm inside diameter and 5 mm wall thickness and an internal pressure of 3 MPa.

The vertical steel cylinder shown in Fig. P10-6*a* is 40 ft high with an inside diameter of 5 ft and a wall thickness of 1 in. It can be used to store either water with a specific weight of 62.4 lbf/ft^3, or ethyl alcohol with a specific weight of 49 lbf/ft^3. Complete your calculations for the base location A and at midheight location B as marked in the figure.

The vertical aluminum cylinder shown in Fig. P10-6*b* is 10 m high with an inside diameter of 1.5 m and a wall thickness of 25 mm. It can be used to store either ice water with a specific weight of 897 kgf/m^3, or liquid ether with a specific weight of 738 kgf/m^3. Complete your calculations for the base location A and at midheight location B as marked in the figure.

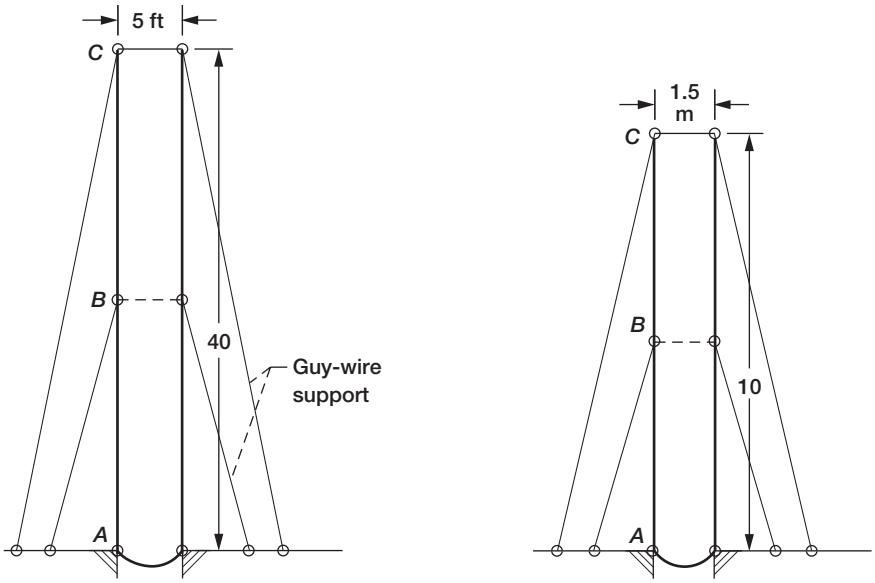

(a) Steel tank.

(b) Aluminum tank.

FIGURE P10-6

11 Column Buckling

Consider a solid circular aluminum bar member with one square inch cross-sectional area and a length of ($L = 10$ ft), as shown in Fig. 11-1*a*. The member can be used as a tensile strut or as a column, as shown in Figs. 11-1*b* and 11-1*c*, respectively. As a strut, it is suspended at support *A* and subjected to a tensile load *P*. The member is in tension and it can carry a load of about 60 kip for aluminum yield strength of ($\sigma_0 = 60$ ksi). As a column, the same member is subjected to a compressive load *P*. Its load-carrying capacity in compression can be reduced to about half a kip. The member load capacity depended on the failure type, which for our discussion can be either yielding or buckling. As a strut, it would fail in yielding with a capacity of 60 kip. As a column, it is susceptible to fail in buckling at about 0.5 kip load. A study of buckling is important because this failure type reduces the load-carrying capacity of a member in compression.

11.1 The Buckling Concept

A strut subjected to a tensile load (P) induces an elongation or axial displacement (u_s), as shown in Fig. 11-1*b*. The same member subjected to compression (P), as a column, can induce axial contraction (u_c) and an additional out-of-line (or plane) displacement (w), as shown in Fig. 11-1*c*. Buckling occurs when the straight column develops the out-of-line displacement, or the buckled form. The distinguishing features of buckling are

1. **Compression**. Buckling can occur when the induced stress is compressive, such as in a column. Tensile stress cannot buckle a strut.
2. **Stress Strain Relation**. The compressive stress in a buckled column is within the elastic limit. The stress-strain relation is linear. There can be exceptions to this rule.

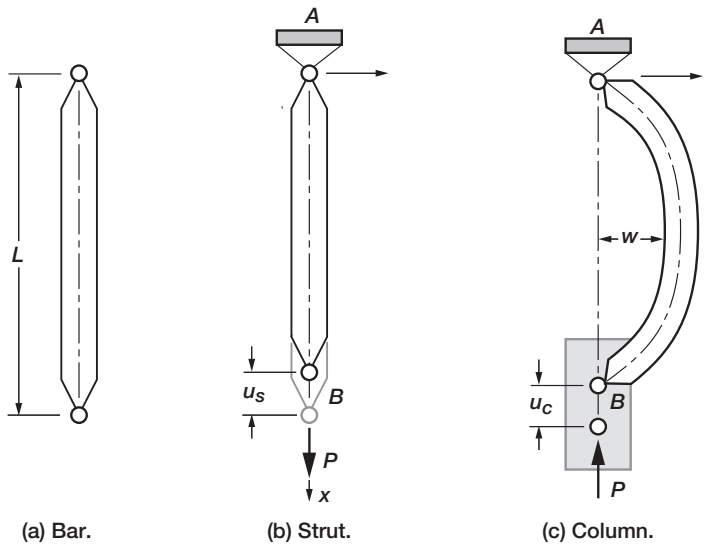

FIGURE 11-1 *Failure of a bar member.*

3. **Strain Displacement Relation**. The strain (ε_s) displacement (u) relation becomes nonlinear. This linear relation for the strut is ($\varepsilon_s = \frac{du}{dx}$). For a column, the out-of-plane displacement (w) has to be accounted in the strain displacement relation $\left\{\varepsilon_s = \frac{du}{dx} + (\frac{dw}{dx})^2\right\}$ that included the square of rotation. A buckling solution can be considered as a special case of nonlinear analysis.
4. **Buckling Analysis**. Column, plate, and shell structures are prone to buckling. Buckling analysis uses the Young's modulus of the material and the moment of inertia of the column cross-section, as well as its length. The load-carrying capacities of a column, a plate, and a cylinder are graphed in Fig. 11-2. The x-coordinate represent strain (or displacement), and it can exceed the yield strain. Our discussion is focused inside the elastic limit. The y-axis is the stress (load) axis. It is normalized for each member; load $P_b = 1$ indicates the initiation of buckling of a column, a plate, or a beam. Load in excess of buckling load ($P_{pb} > P_b$) is referred to as the postbuckling load.

The load-carrying capacity of a column is not increased significantly beyond buckling. The load that buckles the column is also called the critical load. The buckling strength is maintained as a plateau marked by a horizontal line (B–C_{column}) in Fig. 11-2. The column has no significant postbuckling strength. A plate exhibits some postbuckling strength, indicated by a linear line segment (B–C_{plate}) with a positive slope. This may be attributed to an induced stabilizing lateral tension in the postbuckled domain. A cylinder has a lower postbuckling strength with a nonlinear behavior marked as (B–C_{cylinder}). In a test setup, a cylinder is likely to fail at a smaller value of the load than the predicted critical load. We will only discuss the buckling of simple columns. Point B in Fig. 11-2 is referred to by three different names.

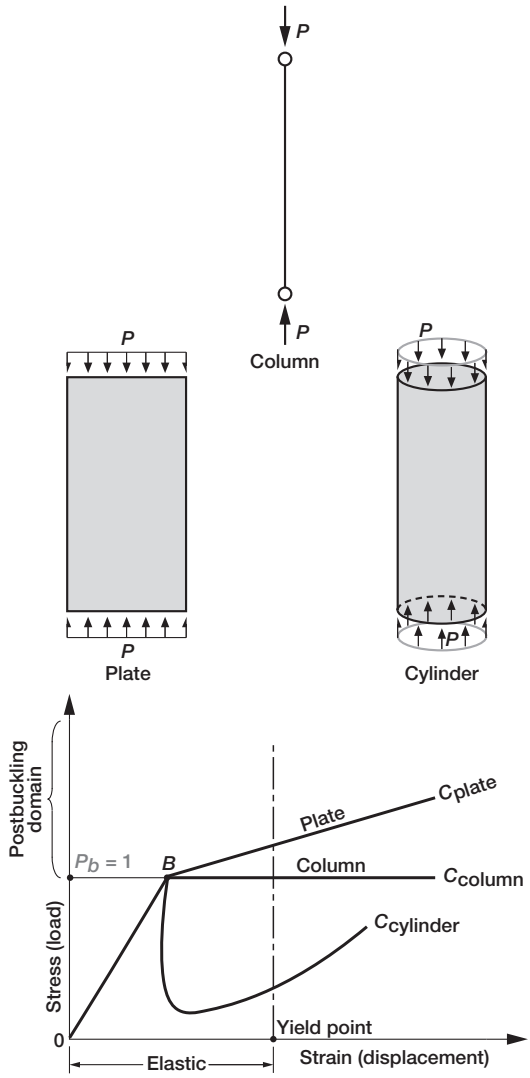

FIGURE 11-2 *Buckling behavior of structures.*

Buckling Point

This name is used because with load below the buckling load the column is straight, or unbuckled. At and beyond this load, a buckled form is observed. The buckling point separates unbuckled and buckled domains.

Bifurcation Point

The behavior of a structure significantly changes at location *B*, hence the name "bifurcation." Behavior of the segment *OB* is different from the segment *BC*, (*C* being C_{column} for a

column, C_{plate} for plate, or C_{cylinder} for cylinder). In segment OB the induced displacement is small per unit load increment. It has high strength and stiffness (or load/displacement). For the plate example, the slope changes abruptly at B, between prebuckled segments OB and postbuckled segment BC_{plate}. The slope is a measure of the load capacity in some scale. A column cannot increase its strength beyond point B because it has zero stiffness in segment BC_{column}. A plate can carry some extra load in the postbuckled domain because of positive slope in segment BC_{plate}. The load-carrying capacity of the cylinder is reduced in the neighboring segment because of negative slope.

Critical Point

For load below the critical point, a linear analysis is quite adequate. Beyond this point, nonlinearity may have to be accounted for. Point B is critical because it defines the linear and nonlinear domains. The nonlinear analysis can be linearized to derive the buckling load. The buckling load is also referred to as critical load or bifurcation load.

11.2 State of Equilibrium

The equilibrium equation was formulated earlier as a balance between the internal force and external load. The same state of equilibrium can be obtained from an energy functional (π_p) expressed as the difference of the strain energy (U) and potential of work (W) as ($\pi_p = U - W$). A functional of the type can be qualitatively graphed with respect to a typical displacement (Δ) in Fig. 11-3. On the basis of the second variation of the functional $\delta^2\pi$, buckling, which is also referred to as a stability problem, can be classified to three categories.

Stable Equilibrium

A plate problem is an example of stable equilibrium. For such a problem, $\delta^2\pi > 0$ is positive in the postbuckled domain. Consider the same Fig. 11-3 in a different context. Let it

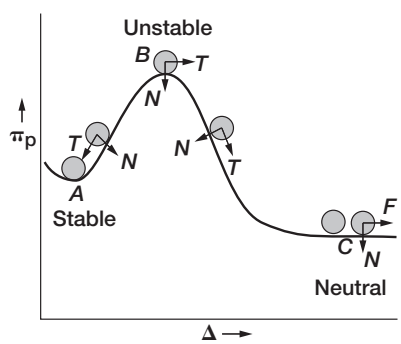

FIGURE 11-3 *State of stability.*

represent a ground contour—a valley at A, a hill at B, and a flat area at C. A ball rolled with a small perturbation at A will return back to its original position A after a few oscillations. The weight of the ball can be resolved into a tangential component (T) and a normal component N. The tangential force (T) caused the oscillation. This motion will die out with time. Point A is called a stable point because no instability is anticipated. A plate-buckling belongs to this category.

Unstable Equilibrium

A cylinder problem is an example of unstable equilibrium. For such a problem, $\delta^2\pi < 0$ is negative. Consider the hilltop location B. A ball will roll away with even a small perturbation at B. A small tangential force (T) will set the ball in motion. Cylinder belongs to this class.

Neutral Equilibrium

A column-buckling problem is an example of neutral equilibrium. For such a problem, $\delta^2\pi = 0$ is zero. Consider the flat ground at C. A ball will gently roll and stop when slightly perturbed. Because it stays at the perturbed location, it is said to be in a state of neutral equilibrium.

The buckling equations can be developed from a consideration of the energy functional or from a perturbation theory. We will adopt the perturbation theory to derive the equation and then solve the resulting equations to calculate the buckling load for different types of columns.

11.3 Perturbation Equation for Column Buckling

Consider a perfectly straight column under a specified compressive load P, shown in Fig. 11-4a. Consider the origin of the coordinate system at B and the x- and y-axes as marked. The column is pinned at A and B. However, the support at B is allowed to move or slide along the x axis. A perturbed configuration of the centerline is shown in Fig. 11-4b. It has two displacement components: an axial displacement $u(x)$ and a transverse displacement $v(x)$. Both displacement components are small. The forces acting along the column centerline consist of an axial force F and a bending moment M. The two equilibrium equations are as follows:

Axial equilibrium: $F - P = 0$

Rotational EE about B: $M + vF = 0$

Both EE are combined to obtain

$$M + Pv = 0 \tag{11-1}$$

Equation (11-1) contains both a force variable (M) and a displacement variable (v). The moment curvature relationship is used to express the equation in either moments or displacements. In this relation the sign associated with the curvature ($M = \pm EI\frac{d^2v}{dx^2}$) is ignored because the buckled form with equal probability can develop along the positive or negative y (or v) coordinate direction.

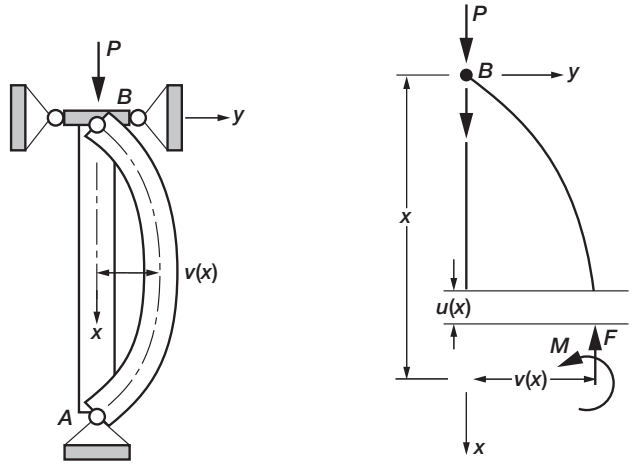

(a) Buckled column. (b) Equilibrium at x.

FIGURE 11-4 *Forces in a simply supported column.*

$$M = EI\frac{d^2v}{dx^2} \tag{11-2}$$

where E is the Young's modulus and I is the moment of inertia of the column section. Equation (11-1) can be expressed in either moment or in displacement. Buckling analysis uses the Young's modulus of the material and the moment of inertia of the column cross-section as well as the length of the column

Equilibrium Equation Expressed in Moment

This is obtained by differentiating Eq. (11-1) twice with respect to the x-coordinate and then eliminating displacement in favor of moment.

$$\frac{d^2M}{dx^2} + \frac{P}{EI}M = 0 \tag{11-3a}$$

Equilibrium Equation Expressed in Displacement

This is obtained by eliminating moment in favor of displacement.

$$\frac{d^2v}{dx^2} + \frac{P}{EI}v = 0 \tag{11-3b}$$

Equations (11-3a) and (11-3b) are homogeneous equations. Equation (11-3a), which is expressed in moments, forms the basis of the force method for the buckling analysis of column. Equation (11-3b), which is expressed in displacements, forms the basis of the

traditional displacement, or stiffness, method. We will develop the buckling analysis of columns through the stiffness method because this formulation is adequate for the purpose.

11.4 Solution of the Buckling Equation

The buckling equation is normalized using a parameter λ, called the buckling parameter, to obtain a standard second-order linear differential equation with constant coefficients.

$$\frac{d^2v}{dx^2} + \lambda^2 v = 0$$

$$\lambda^2 = \frac{P}{EI} \tag{11-4}$$

The equation is solved in closed form to obtain a general solution in terms of two constants (c_1 and c_2) as

$$v(x) = c_1 \sin \lambda x + c_2 \cos \lambda x \tag{11-5}$$

The constants are adjusted for the boundary conditions of the problem to obtain the buckling solution. The buckled form is either a sine function, or a cosine function, or combination of both trigonometric functions. The solution is discussed for different boundary conditions.

Case 1—Simply Supported Column

A simply supported column of length L, moment of inertia I, and Young's modulus E is shown in Fig. 11-5a. It is subjected to a load P at node B. This node is allowed to displace along the column in the x-coordinate direction. The boundary conditions of the column are

$$\begin{aligned} &(1)\ \text{At} \quad B \quad x = 0 \quad \text{and} \quad v(x) = 0 \\ &(2)\ \text{At} \quad A \quad x = \mathrm{L} \quad \text{and} \quad v(x) = 0 \end{aligned} \tag{11-6a}$$

Substitution of the boundary conditions into the displacement function given by Eq. (11-5) yields

$$v(0) = c_2 = 0$$

$$v(L) = c_1 \sin \lambda L = 0$$

$$\lambda_n = \frac{n\pi}{L} \tag{11-6b}$$

The buckling parameter (λ_n) is the eigenvalue, and the subscript (n) is the mode number. Buckling load is calculated for a specified value of mode number n, as follows.

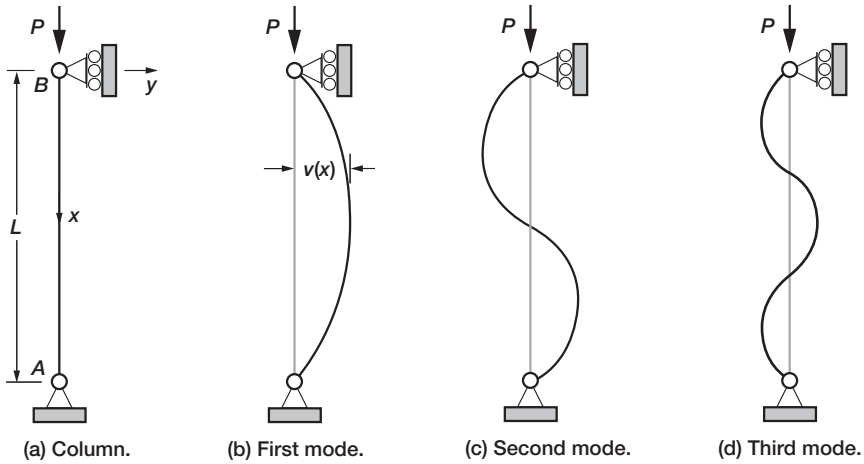

(a) Column. (b) First mode. (c) Second mode. (d) Third mode.

FIGURE 11-5 *Buckling of a simply supported column.*

For $n = 1$

$$\lambda_1 = \frac{\pi}{L} = \sqrt{\frac{P_1 L}{EI}}$$

$$P_1 = \frac{\pi^2 EI}{L^2} \tag{11-7a}$$

For $n = 2$

$$\lambda_2 = \frac{2\pi}{L}$$

$$P_2 = \frac{4\pi^2 EI}{L^2} = 4P_1 \tag{11-7b}$$

For $n = 3$

$$P_3 = \frac{9\pi^2 EI}{L^2} = 9P_1 \tag{11-7c}$$

The mode ($n = 1$) is referred to as the first, or fundamental, buckling mode. This mode shape is half a sine wave as shown in Fig. 11-5*b*. The load corresponding to this mode is the buckling load (P_1). This is the least amount of load required to buckle the column, and this is also referred to as the critical load ($P_{crt} = P_1$). The column does not buckle for a load that is less than the critical load. The mode $n = 2$ is the second mode, $n = 3$ is the third mode, and so on, as depicted in Fig. 11-5. The buckling load is greater for higher modes as the square of (n^2). For example, the buckling load for the second mode is 4 times that for the first mode ($P_2 = 4P_1$). For the third mode, the load increases 9 times ($P_2 = 9P_1$). The mode shape or the buckled pattern is

$$v_n(x) = c_1 \sin \lambda_n x = \sin \lambda_n x \tag{11-8}$$

The buckled pattern is a sine function, as given by Eq. (11-8). It is defined in terms of a multiplicative constant c_1. The buckling analysis falls into the eigenvalue class of problems, for which the mode shape cannot be defined uniquely. For our purpose, we can set the constant to unity ($c_1 = 1$) without any adverse consequences. The fundamental mode shape ($n = 1$) is single sine half-wave with a span of L. The second mode has two sine half-waves; the third has three, and so forth.

The second mode requires considerably more load ($P_2 = 4P_1$) to deform the column to a pattern with two sine half-waves than is necessary for the first mode. To deform the column to the third mode, a still larger load is required ($P_3 = 9P_1$). In practice, the first mode decides the strength of the column in buckling.

Case 2—Clamped Column

A clamped column of length L, moment of inertia I, and Young's modulus E is shown in Fig. 11-6a. It is subjected to a load P at node B. This node is allowed to displace ($u(x)$) along the column in the x-coordinate axis. For a clamped boundary the displacement and the slope are zero at nodes A and B. This column has four boundary conditions.

$$\begin{aligned} v(x = 0) &= 0 \\ v(x = L) &= 0 \\ \frac{dv}{dx}(x = 0) &= 0 \\ \frac{dv}{dx}(x = L) &= 0 \end{aligned} \tag{11-9a}$$

The clamped boundary condition induces a moment (M_0) at the boundary location ($x = 0$) and this must be accounted for in the EE given by Eq. (11-1). Both the axial force (P) and the

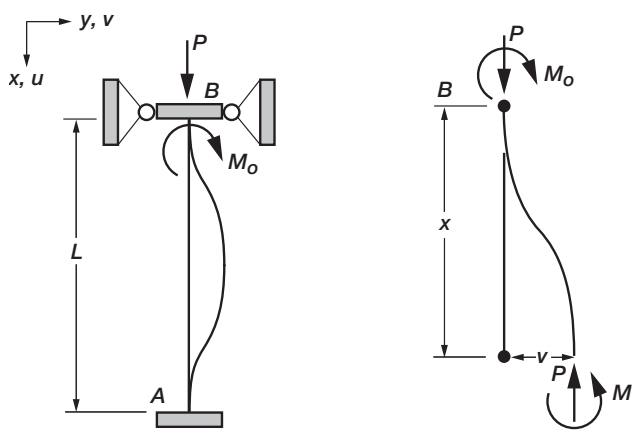

(a) Clamped column. (b) Equilibrium at x.

FIGURE 11-6 *Buckling of a clamped column.*

moment (M_0) are marked on a column segment in Fig. 11-6*b*. The rotational equilibrium yields a homogeneous equation

$$M - M_0 + Pv = 0$$

Moment (M) is expressed in displacement v

$$EI\frac{d^2v}{dx^2} + Pv = M_0$$

The equation is normalized with the buckling parameter (λ).

$$\frac{d^2v}{dx^2} + \lambda^2 v = \lambda^2\frac{M_0}{P} \tag{11-9b}$$

The solution to the second-order differential equation has the following form:

$$v(x) = A\sin\lambda x + B\cos\lambda x + \frac{M_0}{P} \tag{11-10}$$

The solution is defined in terms of three constants—A, B, and the fixed-end moment M_0, which is also an unknown. There are four boundary conditions, consisting of the displacement and slope to be zero at boundary location A and B. Only three of the four conditions should be used because the condition of symmetry ($M_B = M_0$ and $M_A = M_0$) has already been used to eliminate the shear force. The first three boundary conditions yield

$$\begin{aligned} v(x=0) = 0&: \quad B + \frac{M_0}{P} = 0 \\ v(x=L) = 0&: \quad A\sin\lambda L + B\cos\lambda L + \frac{M_0}{P} = 0 \\ \frac{dv}{dx}(x=0) = 0&: \quad A\lambda = 0 \end{aligned} \tag{11-11}$$

Because (λ) is not zero, its coefficient has to be zero, ($A = 0$). Also ($B = -M_0/P$). The homogeneous equation yields the buckling load of a clamped column as

$$\begin{aligned} B(\cos\lambda L - 1) &= 0 \\ \cos\lambda L &= 1 \\ \lambda L &= 2n\pi \qquad (n = 1, 2, 3, \ldots, n) \\ P_n &= \frac{4n^2\pi^2 EI}{L^2} \end{aligned} \tag{11-12a}$$

The buckling load for the first mode (P_1) and second mode (P_2) are

$$P_1 = \frac{4\pi^2 EI}{L^2} \tag{11-12b}$$

$$P_2 = \frac{16\pi^2 EI}{L^2} \tag{11-12c}$$

The fundamental buckling load of a clamped column is equal to four times than that of a simply supported column. In buckling, a clamped column is much stronger than a simply supported column. The buckling load of a clamped column in the second mode is four times bigger than its fundamental load.

Case 3—Clamped-Pinned Column

A clamped-pinned column of length L, moment of inertia I, and Young's modulus E is shown in Fig. 11-7a. It is clamped at B and simply supported at A. It is subjected to a load P at node B, which is clamped but can move along the x axis. There are four boundary conditions. The boundary conditions at the fixed boundary are: zero displacement ($v = 0$) and zero slope ($\frac{dv}{dx} = 0$) at B; zero displacement ($v = 0$) and zero moment ($M = 0$) at the simply supported boundary A. The zero moment at the simply supported node A is used to back-calculate the shear force ($V = M_0/L$) at the supports. This boundary condition cannot be used again. The remaining three conditions are

$$v(x = 0) = 0$$

$$v(x = L) = 0$$

$$\frac{dv}{dx}(x = 0) = 0 \tag{11-13a}$$

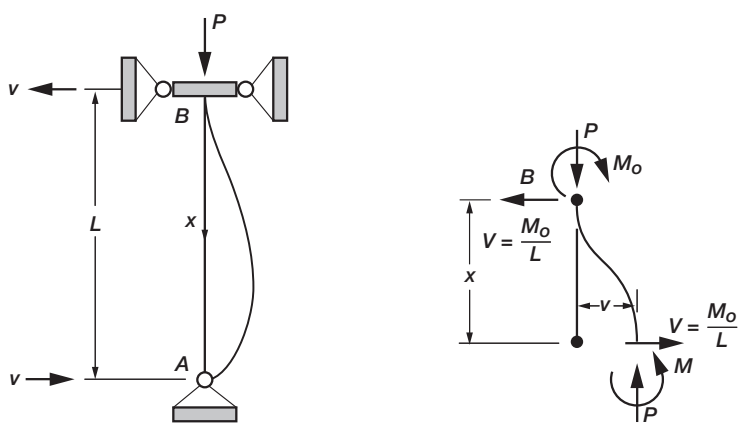

(a) Clamped-pinned column. (b) Equilibrium at x.

FIGURE 11-7 *Buckling of a clamped-pinned column.*

The forces are marked on a column segment in Fig. 11-7*b*. The clamped condition induces a moment (M_0) and a shear force ($V = M_0/L$) as marked. Rotational EE is written at x, and then it is expressed as a homogeneous equation.

$$M + \frac{M_0}{L}x + Pv - M_0 = 0$$

$$EI\frac{d^2v}{dx^2} + Pv - M_0\left(1 - \frac{x}{L}\right) = 0$$

$$\frac{d^2v}{dx^2} + \lambda^2 v = \frac{\lambda^2 M_0}{P}\left(1 - \frac{x}{L}\right) \tag{11-3b}$$

The solution of the second-order differential equation has the following form:

$$v(x) = A\sin\lambda x + B\cos\lambda x + \frac{M_0}{P}\left(1 - \frac{x}{L}\right) \tag{11-14}$$

The solution ($v(x)$) can be verified by back-substituting in Eq. (11-13*b*). It is defined in terms of three constants—A, B, and the fixed-end moment M_0, which is also an unknown. The three boundary conditions yield the following equations.

$$v(x = 0) = 0: \quad B + M_0/P = 0$$

$$v(x = L) = 0: \quad A\sin\lambda L + B\cos\lambda L = 0$$

$$\frac{dv}{dx}(x = 0) = 0: \quad A\lambda - M_0/(PL) = 0$$

The equations reduce to

$$\tan\lambda L = \lambda L \tag{11-15}$$

The constant B can be replaced as ($B = -M_0/P$). Likewise, A is obtained as ($A = M_0/\lambda PL$). Substitution in the remaining equation yields ($\tan\lambda L = \lambda L$), as given by Eq. (11-15). This equation has no closed-form solution. Furthermore, a tangent function ($\tan(s)$) changes rapidly at a certain value (for example, in the vicinity of $s = \phi/2$). The first three approximate solutions are

$$(\lambda L)_{1,2,3} = (1 \cdot 43\pi, 2 \cdot 46\pi, 4 \cdot 48\pi) \tag{11-16}$$

The buckling loads for the first three modes are

$$P_1 = 2.05\frac{\pi^2 EI}{L^2}$$

$$P_2 = 6.05\frac{\pi^2 EI}{L^2}$$

$$P_3 = 20.1\frac{\pi^2 EI}{L^2} \tag{11-17}$$

The buckling load of the column in the higher mode is more than the fundamental buckling load. The fundamental buckling load of a clamped-pinned column lies between a simply supported column and a fixed column. It is about twice that of a simply supported column and about half that of a fixed column.

11.5 Effective Length of a Column

The fundamental buckling loads of columns with four different boundary restraints are listed in the first row of Table 11-1. The mode shapes for the four columns are depicted in Fig. 11-8. All four columns are identically equal except for the boundary restraints. The solution given for a clamped-free column can be verified. The simply supported column buckles into a half sine wave. The clamped-free column shown in Fig. 11-8*d* has a quarter sine wave buckled form. Engineers have combined the formulas given in the first row of Table 11-1 into a single formula as

$$P = \frac{\pi^2 EI}{(L_e)^2} = \frac{\pi^2 EI}{(KL)^2} \tag{11-18}$$

The formula contains parameters K, and $L_e = KL$. The parameter L_e is referred to as the effective length. The formula given by Eq. 11-18 can be used if the effective length is adjusted according to the boundary conditions.

TABLE 11-1 Effective Length of Columns

Simply Supported	*Clamped*	*Clamped-Pinned*	*Clamped-Free*
$P_{crt} = \frac{\pi^2 \mathrm{EI}}{L^2}$	$\frac{\pi^2 \mathrm{EI}}{(0.5L)^2}$	$\frac{\pi^2 \mathrm{EI}}{(0.7L)^2}$	$\frac{\pi^2 \mathrm{EI}}{(2L)^2}$
$P_{crt} = \frac{\pi^2 \mathrm{EI}}{(KL)^2}$, $K = 1$	$\frac{\pi^2 \mathrm{EI}}{(KL)^2}$, $K = 0.5$	$\frac{\pi^2 \mathrm{EI}}{(KL)^2}$, $K = 0.7$	$\frac{\pi^2 \mathrm{EI}}{(KL)^2}$, $K = 2$
Effective length $L_e = L$	$L_e = 0.5L$	$L_e = 0.7L$	$L_e = 2L$

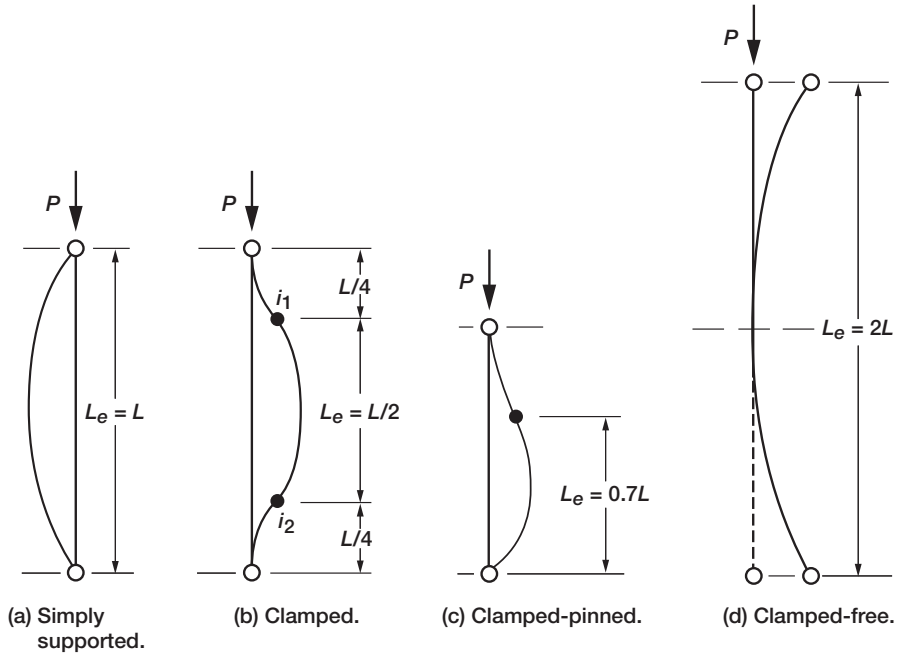

FIGURE 11-8 *Buckling of columns with different boundary conditions.*

For the simply supported column, the effective length is equal to the actual column length ($K = 1$ and $L_e = L$), and Eq. (11-18) yields the correct solution. For the clamped-free column, the effective length is twice the actual column length ($K = 2$, $L_e = 2L$), and Eq. (11-18) again yields the solution. For the clamped column, the effective length is equal to half the column length ($K = 0.5, L_e = 0.5L$). The effective length of a clamped-pinned column is 70 percent of its actual length ($K = 0.7, L_e = 0.7L$).

The effective length is the distance between the points of inflection in the deformed shape of the column, which is referred to as the elastic curve. At the inflection point, the moment changes sign and the member is not expected to resist any moment. At this transition point the curvature changes, and it is also called the contraflexure point.

11.6 Secant Formula

A manufactured column may not be perfectly straight, and the line of action of the applied load need not coincide with the column centerline. The effect of such situations can be estimated by incorporating a load eccentricity factor in the buckling equation. This analysis is called the secant formula because the maximum displacement of such a column contains the trigonometric secant function.

Consider a column of length L, moment of inertia I, and Young's modulus E, with simply supported boundaries at A and B, as shown in Fig. 11-9a. It is subjected to a load P. The load

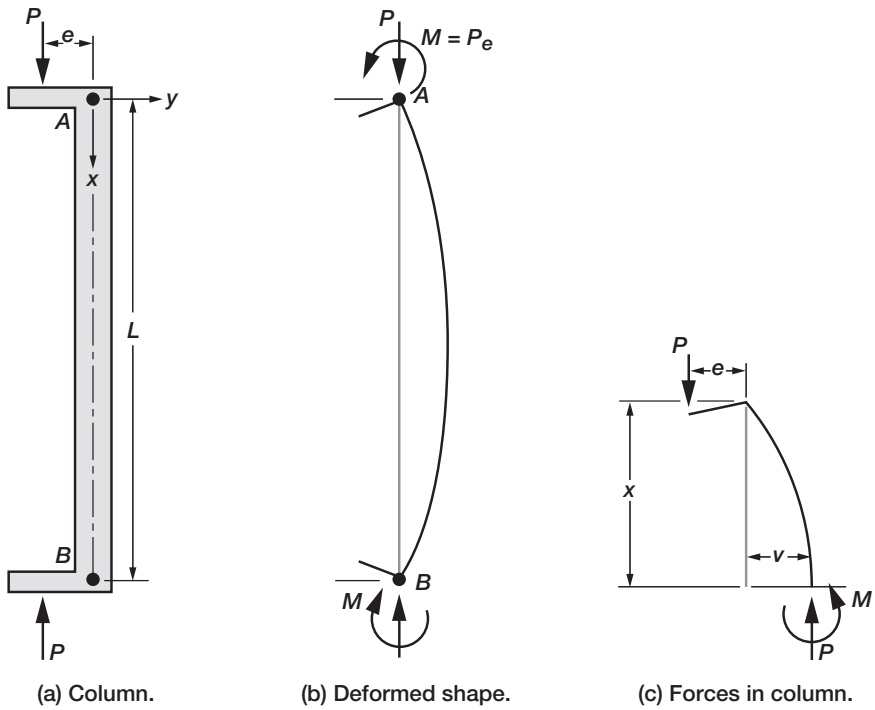

FIGURE 11-9 *Buckling of an eccentrically loaded column.*

is applied with a small eccentricity e with respect to the column axis, which also is the x-coordinate. The boundary conditions at A and B are assumed to be simple supports that restrain transverse displacement (v) but allow rotation. The deformed shape of the column centerline is shown in Fig. 11-9b. The column bends or buckles with AB as the centerline. The applied load can be replaced by an equivalent axial load (P) and a moment ($M = Pe$), with reference to the centerline, as marked in Fig. 11-9b. The buckling equation is obtained from the rotational equilibrium of the forces marked in Fig. 11-9c.

$$M + P(v + e) = 0$$

$$EI\frac{d^2v}{dx^2} + P(v + e) = 0$$

$$\frac{d^2v}{dx^2} + \lambda^2(v) + \lambda^2 e = 0 \tag{11-19}$$

The solution of the buckling equation yields

$$v(x) = c_1 \sin \lambda x + c_2 \cos \lambda x - e \tag{11-20}$$

The solution can be verified by substitution in Eq. (11-19). The boundary conditions ($v(x = 0) = v(x = L) = 0$) yield the two constants (c_1 and c_2).

$$v(x = 0) = 0: \quad c_2 = e$$

$$v(x = L) = 0 \quad \text{yield } c_1 \sin \lambda L + e \cos \lambda L - e = 0$$

$$\text{or} \quad c_1 = \frac{e(1 - \cos \lambda L)}{\sin \lambda L} = e \tan \frac{\lambda L}{2} \tag{11-21}$$

The displacement function is obtained by substituting the constants into Eq. (11-20).

$$v(x) = e\left(\tan \frac{\lambda L}{2} \sin \lambda x + \cos \lambda x - 1\right) \tag{11-22}$$

The displacement (v(x)) is a symmetrical function with peak at the midspan of the column. The moment also attains its maximum value at the midspan.

$$v_{\max} = v(x = L/2) = e\left(\sec \frac{\lambda L}{2} - 1\right) \tag{11-23}$$

The analysis is called the secant formula because Eq. (11-23) contains a secant function.

Consider a column subjected to an axial load (P) and a bending moment (M). The stress in the column can be obtained from the following formula:

$$\sigma = \frac{P}{A} + \frac{My}{I} \tag{11-24}$$

Here, A is the cross-sectional area of the column; y is the distance of a fiber from the neutral axis of the cross-section. Stress is maximum at the outer fiber, so we let $y = c$ at that location. The moment of inertia (I) can be expressed in terms of the area and the radius of gyration (r) as

$$I = Ar^2 \tag{11-25}$$

Load (P) produces a compressive axial stress (P/A). The bending stress because of moment ($M = Pe$) can be either tensile or compressive as shown in Fig. 11-10. The maximum stress ($\sigma_{\max}$) is obtained by adding the compressive components as

$$\sigma_{\max} = \frac{P}{A} + \frac{Mc}{Ar^2}$$

$$M \text{ peaks at midspan}\left(x = \frac{L}{2}\right) \text{ as}$$

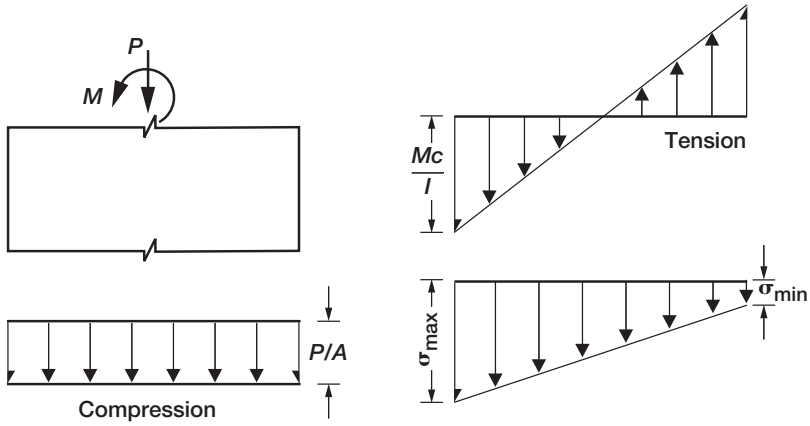

FIGURE 11-10 *Stress in column cross-section.*

$$M = P(e + v_{max})$$

$$= Pe\left(1 + \sec\frac{\lambda L}{2} - 1\right) = Pe\sec\frac{\lambda L}{2}$$

$$M = Pe\sec\left(\frac{L}{2}\sqrt{\frac{P}{EI}}\right)$$

The maximum stress becomes

$$\sigma_{\max} = \frac{P}{A}\left[1 + \frac{ec}{r^2}\sec\left(\frac{L}{2\gamma}\sqrt{\frac{P}{AE}}\right)\right] \tag{11-26}$$

The stress is a nonlinear function of the load (P), and it also contains the secant function in load. It is nonlinear because the moment ($M = Pe$) is a function of the load (P). The superposition rule is not valid. The moment and the load cannot be applied separately to obtain the displacement function in Eq. (11-22).

Interpretation of the Secant Formulas

The displacement formula given by Eq. (11-23) can be graphed with midspan displacement (v) along the x-axis for a load value (P) applied with a specified eccentricity (e) along the y-axis, as shown in Fig. 11-11. This graph yields an ideal column in the limiting case. Note that the displacement formula has two factors: e and sec ($\lambda L/2 - 1$). The maximum displacement ($v_{\max}$) can be finite when the first factor approaches zero ($e \Rightarrow 0$) and the second factor approaches infinity ($\sec(\lambda L/2 - 1) \Rightarrow \propto$). This situation provides the buckling load of

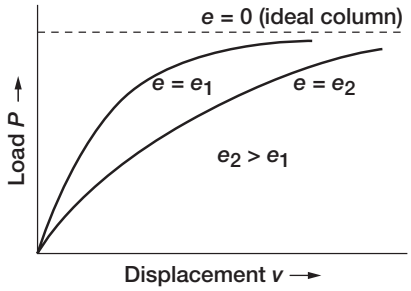

FIGURE 11-11 *Load displacement diagram for an eccentrically loaded column.*

a simply supported column with zero load eccentricity, which is referred to as an ideal column. In the load-displacement graph in Fig. 11-11, the asymptote is labeled the "ideal column."

One can generate graphs from Eq. (11-22) for a specified value of eccentricity (e_s) by calculating displacements for different load increments. Two load-displacement graphs for eccentricity (e_1 and e_2) are marked in Fig. 11-11. The graphs are similar except for the multiplicative eccentricity factor (e). Both graphs approach the ideal-column buckling load as the displacement grows. The buckling load can be obtained for a large value of displacement that corresponds to a small value of stiffness ($k = P/v$). Mathematically, buckling can be defined as the location in the load-displacement diagram that corresponds to zero stiffness or infinite displacement.

Problems

Use the properties of material given in Tables A5-1 and A5-2 to solve the problems.

11-1 Calculate the buckling load of a 5-m-long steel column with a 1000 cm^2 sectional area and the following support condition and section properties.

(a) Circular cross-section with simply supported boundary at A and B as shown in Fig. P11-1a.
(b) Circular cross-section with fixed condition at A and simply supported boundary at B.
(c) An annular circular cross-section with an 8 mm wall thickness and fixed boundary conditions at A and B, as shown in Fig. P11-1b.
(d) An annular circular cross-section with an 8 mm wall thickness with fixed condition at A and hinged condition at B, as shown in Fig. P11-1b.
(e) An elliptical cross-section with the major axis oriented along the y-coordinate direction with an (a/b) ratio of 1.5 as shown in Fig. P11-1c. It is simply supported at A while fixed at B.
(f) Column of case (e) but with fixed boundaries at A and B.
(g) A rectangular cross-section with an (a/b) ratio of 1.5 as shown in Fig. P11-1d. The column is fixed at A and it is free at B.
(h) A square column with fixed boundaries at A and B, as shown in Fig. P11-1e.

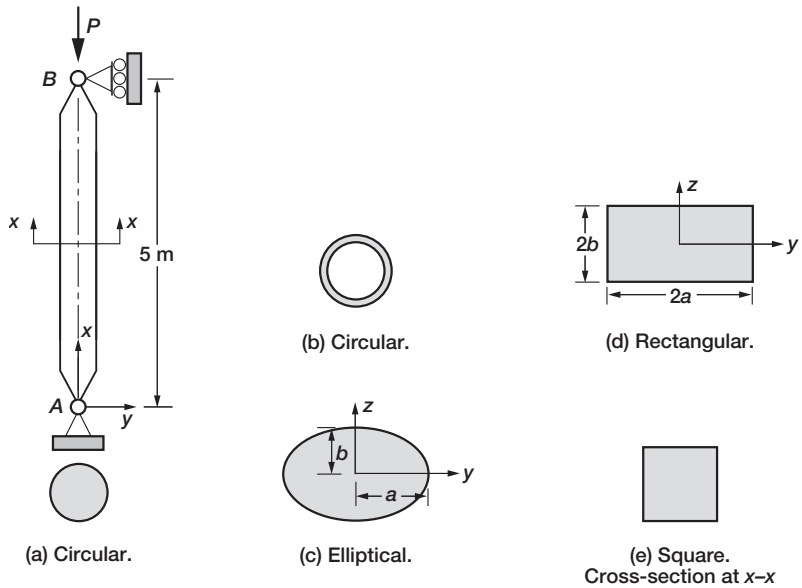

FIGURE P11-1

11-2 The aluminum column shown in Fig. P11-2 is fixed at A and hinged at B. It is made of an I-section with dimensions as marked. Calculate:

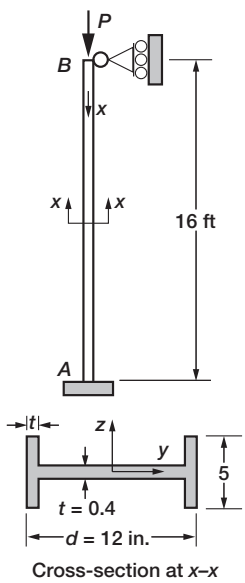

FIGURE P11-2

(a) The minimum-buckling load as well as the load to buckle the column in the $x-y$ plane and the $x-z$ plane.
(b) The critical load for the column to buckle in the second mode.
(c) The effective lengths for the first and second buckled modes.
(d) Consider the same column but made of steel. Calculate the depth (d) marked in the figure, which would equal the critical load of the steel and aluminum columns.

11-3 Calculate the critical load in the members AB, BC, and CD in the three structures shown in Fig. P11-3.

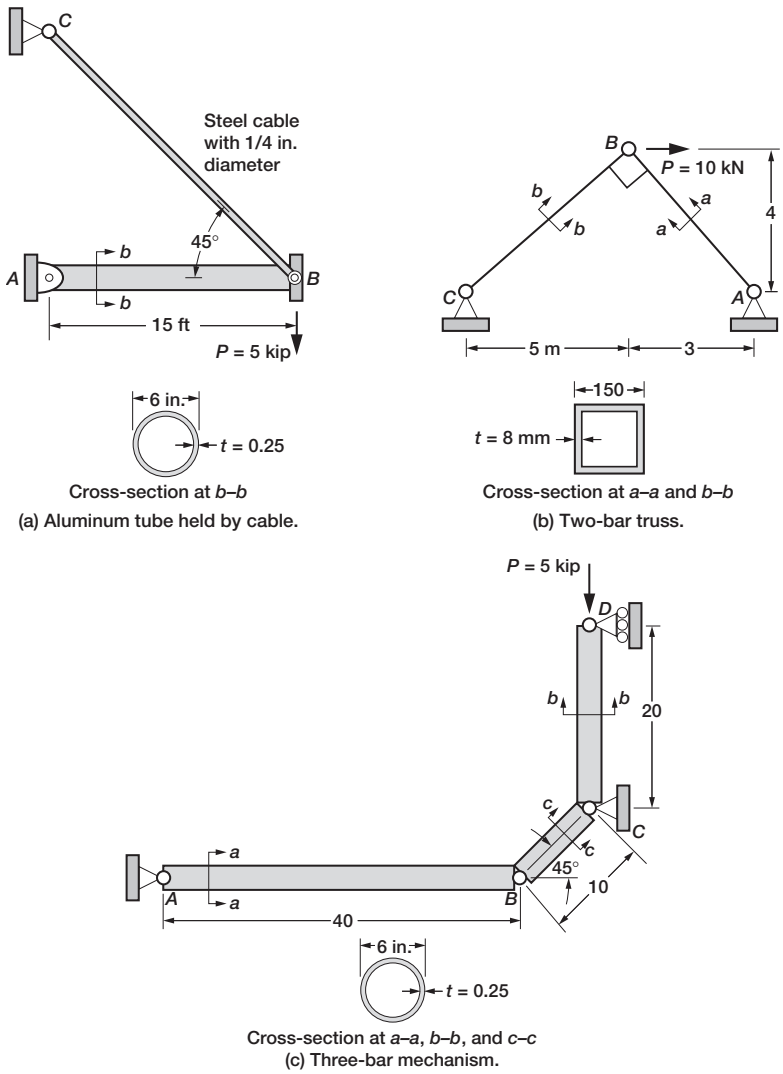

FIGURE P11-3

(a) The first structure is an aluminum tube held in place by a steel cable as shown in Fig. P11-3*a*.
(b) The two-bar truss is made of a steel bar AB and an aluminum bar BC with dimensions as marked in Fig. P11-3*b*.
(c) The three-bar mechanism is made of a steel link AB and two aluminum links as shown in Fig. P11-3*c*.

11-4 Use the secant formula to calculate the maximum stress and displacement for a 15 ft long eccentrically loaded (P = 10 kip) steel column with simply supported boundary conditions and section properties as marked in Fig. P11-4.
(a) Circular cross section with load eccentricity ($e = r/2 = 3$ in.) as shown in Fig. P11-4*a*.
(b) An annular cross section with a 0.25 in. wall thickness with a load e centricity equal to twice the wall thickness.
(c) An elliptical cross section with the major axis oriented along the y-coordinate direction with an (a/b) ratio of 1.5 and ($a = 6$ in.) as shown in the figure. The load eccentricity is equal to half of the minor axis (0.5 b) along the z-coordinate direction.
(d) A rectangular cross section with an (a/b) ratio of 1.5, and ($a = 6$ in.) as marked in the figure. The load eccentricity is ($e = 0.5\ a$) along the z-coordinate axis.

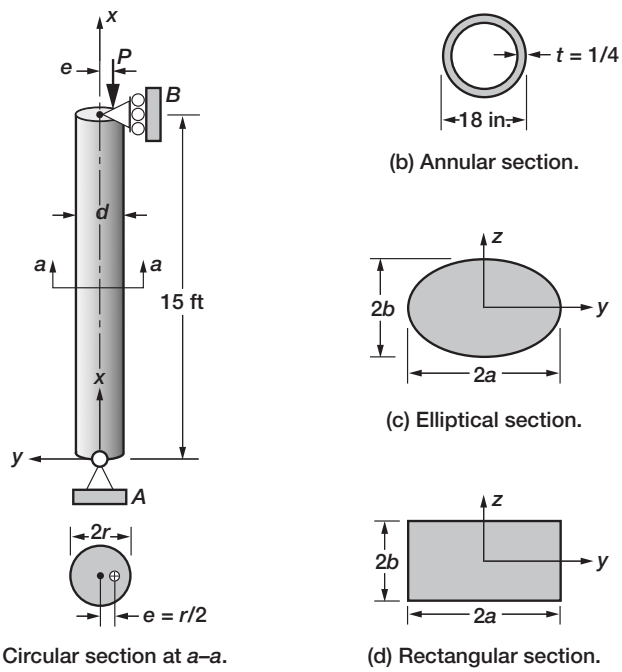

FIGURE P11-4

11-5 The aluminum column shown in Fig. P11-5 is fixed at A and hinged at B. Use the concept of effective length to replace the fixed condition by a simple support. It is

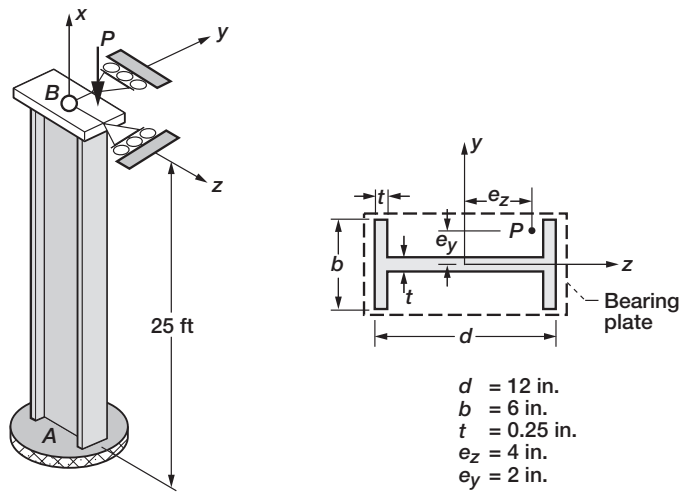

FIGURE P11-5

made of an *I*-section with dimensions as marked. Calculate maximum stress and displacement for load eccentricities marked in the figure.

11-6 Calculate the maximum compressive stress and displacement in member *AB* in the structures shown in Fig. P11-6.

(a) The first structure is an aluminum tube held in place by a steel cable with an eccentric guide as shown in Fig. P11-6*a*.

(b) The two bar truss is made of a steel and an aluminum bar with dimensions and load eccentricity as marked in Fig. P11-6*b*.

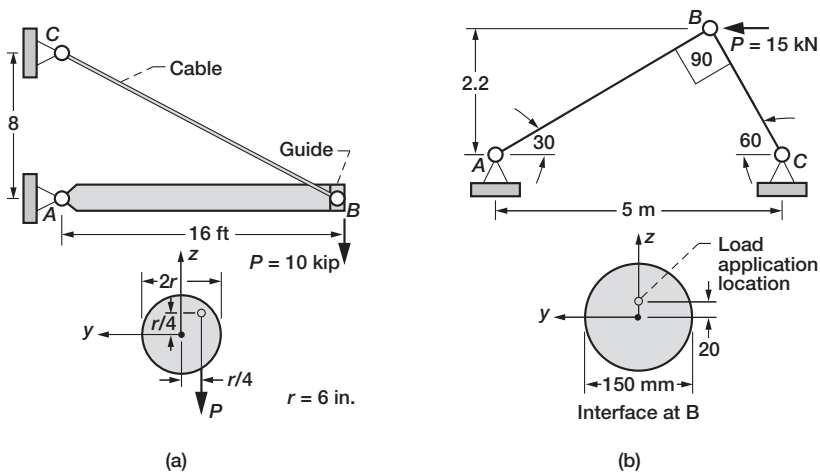

FIGURE P11-6

12 Energy Theorems

Strain energy is a key concept in the discipline of structural mechanics. It also plays a central role in failure theories and fracture mechanics. Equations of structural mechanics have been derived from a use of energy principles. The concept has been used to generate approximate solutions to difficult problems. Several analytical propositions referred to as "energy theorems" have been established utilizing strain energy and related concepts. In this chapter the concepts and theorems are defined and illustrated for strength of materials problems. It is assumed that stress is linearly related to strain through the Young's modulus, which is a constant. Likewise, the load displacement relationship is linear.

The energy theorems are based on strain energy, work done, and related concepts. The 10 basic concepts are defined first. The energy theorems are formulated next. The basic concepts are:

1. Strain energy
2. Complementary strain energy
3. Strain energy of total deformation
4. Complementary strain energy of total deformation
5. Work
6. Complementary work
7. Virtual displacement
8. Virtual force
9. Virtual work
10. Complementary virtual work

The energy theorems are titled as follows:

1. Principle of virtual work
2. Principle of minimum potential energy

3. Castigliano's first theorem
4. Unit displacement theorem
5. Principle of complementary virtual work
6. Principle of complementary energy
7. Castigliano's second theorem
8. Unit load theorem
9. Betti's theorem
10. Maxwell's reciprocal theorem
11. Principle of superposition

12.1 Basic Energy Concepts

Concept 1—Strain Energy

Stress and strain are induced in a loaded structure. The product of stress and strain represents the strain energy density (U_d). The total amount of strain energy (U) stored in the structure is obtained by integrating the density function over the volume as

$$U = \int_V U_d \, dv \tag{12-1}$$

where U is the total amount of strain energy stored in the volume V of the structure. The strain energy density U_d, or strain energy per unit volume, is defined as

$$U_d = \int_\varepsilon \sigma \, d\varepsilon \tag{12-2}$$

Here σ and ε are the uniaxial stress and strain, respectively. The reader must remember that in the definition of strain energy density the increment is taken over the strain, with strain increment $d\varepsilon$. Stress is maintained at (σ) level while the strain is incremented (or changed).

A stress-strain diagram for a linear material is depicted in Fig. 12-1. In this figure, an incremental strain energy density ΔU_d is represented by the vertically shaded area as

$$\Delta U_d = \sigma \, \Delta\varepsilon \tag{12-3}$$

Summation over the entire strain range, from zero strain at A to full strain at C, yields the energy U_d as

$$U_d = \sum \Delta U_d = \int_0^\varepsilon \sigma \, d\varepsilon \tag{12-4}$$

Stress σ and strain ε are related through Hooke's law. The relationship, for a linear material, is defined as

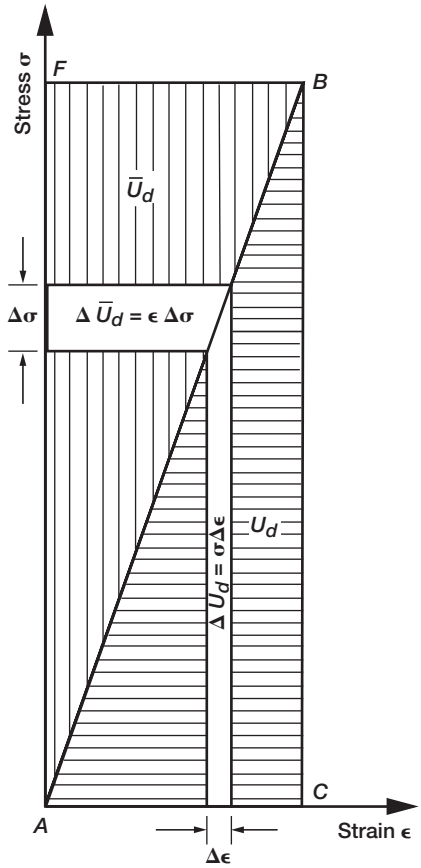

FIGURE 12-1 *Strain energy densities.*

$$\sigma = E\varepsilon \tag{12-5}$$

where E is the Young's modulus.

Elimination of stress between Eqs. (12-4) and (12-5) yields the density function in terms of strain as

$$U_d = \int_0^{\varepsilon} E\varepsilon \, d\varepsilon = \frac{1}{2} E\varepsilon^2 \tag{12-6}$$

In Fig. 12-1, the energy density U_d is represented by the area of the triangle ABC.

Concept 2—Complementary Strain Energy

The triangular area ABF in Fig. 12-1, when added (or complemented) to the strain energy density represented by the area of the triangle ACB, completes the rectangle $ACBF$. The

completing area ABF is defined as the complementary strain energy density function and it is expressed as

$$\overline{U}_d = \int_{\sigma} \varepsilon \, d\sigma \tag{12-7}$$

In the definition of complementary energy density, the increment is taken over stress, or $d\sigma$. Strain is maintained at (ε) level while the stress is incremented (or changed). In Fig. 12-1, the complementary function is defined by the horizontally shaded area $\Delta\overline{U}_d$ and defined as

$$\Delta\overline{U}_d = \varepsilon \, \Delta\sigma \tag{12-8}$$

Summation over the entire stress range, from zero stress at A to full stress at F, yields the density function as

$$\overline{U}_d = \sum \Delta\overline{U}_d = \int_0^{\sigma} \varepsilon \, d\sigma \tag{12-9}$$

For a linear material, the complementary density can be defined as

$$\overline{U}_d = \int_0^{\sigma} \frac{\sigma}{E} d\sigma = \frac{1}{2}\frac{\sigma^2}{E} \tag{12-10}$$

The complementary density is represented by the triangular area AFB. The magnitudes of the density functions U_d and $\overline{U}_d$ are equal for a material with a linear stress-strain relationship, (see Fig. 12-1)

$$U_d = \overline{U}_d = \frac{1}{2}E\varepsilon^2 = \frac{1}{2}\frac{\sigma^2}{E} = \frac{1}{2}\sigma\varepsilon \tag{12-11}$$

Strain energy and complementary strain energy are distinctly separate concepts with different applications even though their numerical magnitudes are equal for materials obeying the linear Hooke's law.

The strain energy density has the unit of stress time strain. Because strain is a dimensionless quantity, U_d has the unit of stress. The strain energy U has the unit of stress time volume or force time displacement because force has the unit of stress time area. It can be measured in foot-pound force when units of force and displacement are considered in units of pound-force and foot, respectively. Its SI unit is measured in units of joule, which is equal to newton meter ($J = \text{N}\cdot\text{m}$); here force and displacement are measured in newton and meter, respectively. The definition given by Eq. (12-7) is valid for pure elastic deformation because initial and thermal strains are excluded in their derivation.

Concept 3—Strain Energy of Total Deformations

Strength of materials problems in addition to mechanical load also deal with initial deformation that may be due to the change of temperature and the settling of supports. The strain energy density functions have to be modified to handle initial deformation. Equations (12-2) and (12-7) are changed, in the following steps, to define the energy densities for total deformation.

Step 1—Strain Due to Total Deformation

The strain due to total deformation, referred to as total strain, is the sum of the elastic strain and initial strain.

$$\varepsilon^t = \varepsilon^e + \varepsilon^i \tag{12-12}$$

where ε^t, ε^e, and ε^i represent the total strain, elastic strain, and initial strain, respectively.

Stress is induced only because of elastic strain, but total strain produces the displacement.

$$\sigma = E\varepsilon^e = E\left(\varepsilon^t - \varepsilon^i\right) \tag{12-13a}$$

$$\varepsilon^t = \frac{du}{dx} \tag{12-13b}$$

where u is the displacement along the x-axis.

Step 2—Range of Integration

In the definition of strain energy due to total deformation, the range of integration is taken from the existing initial strain (ε^i) to the total strain (ε^t).

$$U_d^t = \int_{\varepsilon^i}^{\varepsilon^t} \sigma \, d\varepsilon^t \tag{12-14}$$

By eliminating the stress between Eqs. (12-13a) and (12-14), we obtain

$$U_d^t = \int_{\varepsilon^i}^{\varepsilon^t} E\left(\varepsilon^t - \varepsilon^i\right) d\varepsilon^t = E\left(\frac{1}{2}\left(\varepsilon^t\right)^2 - \varepsilon^i\varepsilon^t\right)\Bigg|_{\varepsilon^i}^{\varepsilon^t} \tag{12-15a}$$

or

$$U_d^t = E\left\{\left(\frac{1}{2}\left(\varepsilon^t\right)^2 - \varepsilon^i\varepsilon^t\right) - \left(\frac{1}{2}\left(\varepsilon^i\right)^2 - \left(\varepsilon^i\right)^2\right)\right\} = E\left(\frac{1}{2}\left(\varepsilon^t\right)^2 - \varepsilon^i\varepsilon^t + \frac{1}{2}\left(\varepsilon^i\right)^2\right) \tag{12-15b}$$

The strain energy density U_d^t of total deformation is graphically depicted in Fig. 12-2.

In Fig. 12-2, the abscissa represents total strain ε^t, and the ordinate depicts stress σ. Strain is a small quantity but stress can be large. The components of Fig. 12-2 are as follows:

$$PA = \varepsilon^i = \text{initial strain}$$
$$PC = OD = \varepsilon^t = \text{total strain}$$
$$AC = PC - PA = \varepsilon^e = \varepsilon^t - \varepsilon^i = \text{elastic strain}$$
$$FP = \sigma = \text{stress}$$
$$E = \frac{\text{Stress}}{\text{Elastic strain}} = \frac{\sigma}{\varepsilon^e} = \frac{PF}{AC} = \frac{BC}{AC} = \frac{BD}{OD} = \frac{PO}{PA}$$

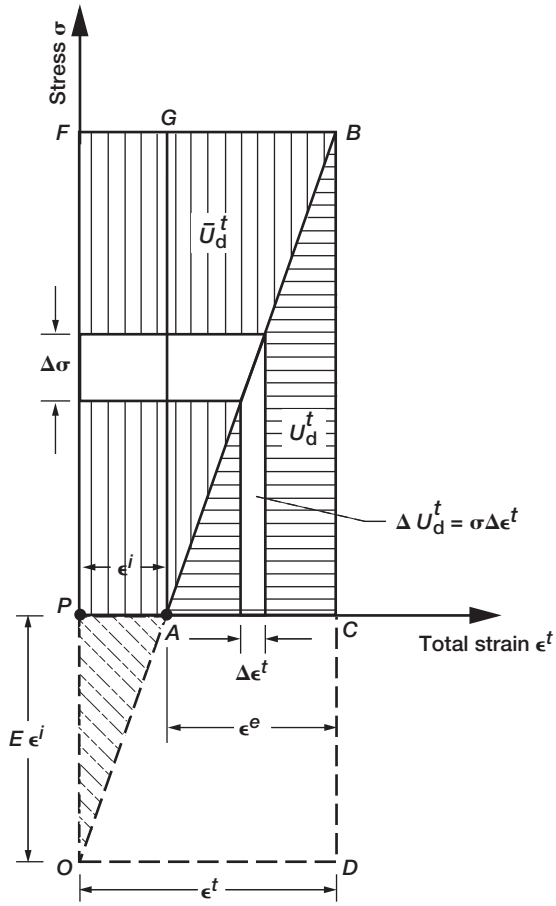

FIGURE 12-2 *Strain energy densities for total deformation.*

$$PO = EPA = E\varepsilon^i$$

The area of the triangle *ODB* in Fig. 12-2 represents the first term $(1/2\ E(\varepsilon^t)^2)$ in Eq. (12-15*b*). The area of triangle $ODB = 1/2\ (OD)\ (BD) = 1/2\ PC(E)\ PC = 1/2\ E\varepsilon^{t2}$. The second term $(E\varepsilon^i\varepsilon^t)$ is presented by the rectangular area *ODCP*. It has a negative sign because it is below the abscissa *PC* in Fig. 12-2.

$$\text{Area of } ODCP = -OD(OP) = -E\varepsilon^i\varepsilon^t$$

The third term $(1/2\ E(\varepsilon^i)^2)$ in Eq. (12-15*b*) is represented by the area of the triangle *PAO*. The strain energy density of total deformation U_d^t is represented by the area of the triangle *ABC*.

$$\text{Area of triangle } ABC = U_d^t = \text{Area under } (OBD - OACD)$$
$$= \text{Area under } (OBD - (OACD + OPA) + OPA)$$
$$= \text{Area under } (OBD - ODCP + OPA)$$
$$U_d^t = \frac{1}{2}E(\varepsilon^t)^2 - E\varepsilon^i\varepsilon^t + \frac{1}{2}E(\varepsilon^i)^2 = E\left((\varepsilon^t)^2 - \varepsilon^i\varepsilon^t + \frac{1}{2}(\varepsilon^i)^2\right) \tag{12-15c}$$

The energy expressions in Eq. (12-15*b*) and Eq. (12-15*c*) are identical. The energy theorem utilizes the variation of the energy density function U_d^t. The variation process reduces the term 1/2 $E(\varepsilon^i)^2$ to zero because the given initial strain is constant and, therefore, does not change. For all practical purposes, this term (1/2 $E(\varepsilon^i)^2$) can be dropped without any consequence. The strain energy of the total deformation can be simplified to

$$U_d^t = \frac{1}{2}E(\varepsilon^t)^2 - E\varepsilon^i\varepsilon^t \tag{12-16a}$$

The strain energy of the total deformation can be expressed in terms of displacement by eliminating ε^t between Eqs. (12-13*b*) and (12-15*b*) to obtain

$$U_d^t = \frac{1}{2}E\left\{\left(\frac{du}{dx}\right)^2 - \frac{du}{dx}\varepsilon^i\right\} \tag{12-16b}$$

Concept 4—Complementary Strain Energy of Total Deformation

The complementary energy density of total deformation is defined as the product of the total strain ε^t multiplied by the incremental stress $d\sigma$ as

$$\overline{U}_d^t = \int_\sigma \varepsilon^t d\sigma \tag{12-17}$$

Total strain can be expressed in terms of stress as

$$\varepsilon^t = \varepsilon^e + \varepsilon^i = \frac{\sigma}{E} + \varepsilon^i \tag{12-18}$$

By eliminating elastic strain between Eqs. (12-17) and (12-18) and integrating over stress, we obtain

$$\overline{U}_d^t = \int_0^\sigma \left(\frac{\sigma}{E} + \varepsilon^i\right) d\sigma \tag{12-19}$$

or

$$\overline{U}_d^t = \frac{\sigma^2}{2E} + \varepsilon^i \sigma \tag{12-20}$$

In Fig. 12-2, the shaded area *PABF* represents the complementary strain energy density of total deformation. It is composed of two areas:

$$PABF = PAGF + ABG \tag{12-21a}$$

The rectangular area *PAGF* represents $\varepsilon^i \sigma$, or

$$PAGF = \varepsilon^i \sigma \tag{12-21b}$$

The term $\left(\frac{\sigma^2}{2E}\right)$ in Eq. (12-20) is represented by the area *ABG* as follows:

$$\text{Area of } ABG = \frac{1}{2} GB(GA) = \frac{1}{2} \varepsilon^e \sigma = \frac{1}{2} \frac{\sigma^2}{E} \tag{12-21c}$$

The complementary strain energy density of total deformation U_d^t represented by the area *PABF*, along with the strain energy density of total deformation $\overline{U}_d^t$ depicted by the area *ABC* complete the rectangle *PCBF*.

$$U_d^t + \overline{U}_d^t = \text{Area of} PCBF = \varepsilon^t \sigma \tag{12-22}$$

Concept 5—Work

Work W done by a force P moving through an incremental displacement du (along the force) is defined by the following integral

$$W = \int_u P \, du \tag{12-23a}$$

For a linear force displacement relationship as shown in Fig. 12-3, the work ($\Delta W = P \, \Delta u$) is obtained by integrating over the displacement as

$$W = \int_0^u P \, du = \frac{1}{2} Pu \tag{12-23b}$$

In Fig. 12-3, work W is represented by the area of the triangle *ABC*.

Concept 6—Complementary Work

The concept of complementary work $\overline{W}$ is defined as the product of displacement u and the increment in load P (or $\Delta \overline{W} = u \, \Delta P$) as shown in Fig. 12-3. The complementary work in integral form is defined as

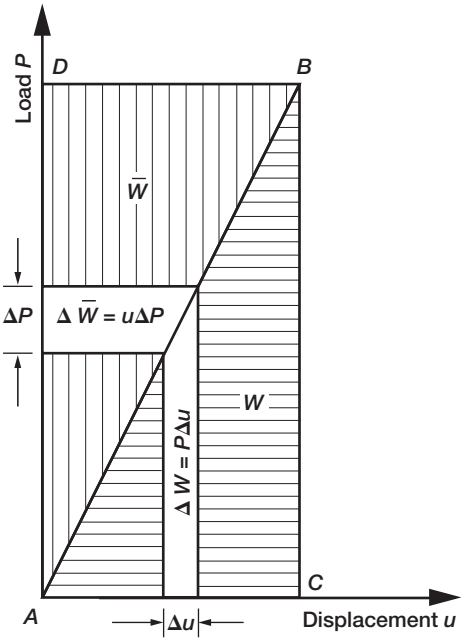

FIGURE 12-3 *Work and complementary work.*

$$\overline{W} = \int_P u \, dP \tag{12-24a}$$

For a linear load displacement relationship, the complementary work is obtained by integrating over the load. It is equal to the area of the triangle *ABD* in Fig. 12-3 as

$$\overline{W} = \int_0^P u \, dP = \frac{1}{2} uP \tag{12-24b}$$

For a linear relationship between load and displacement, the work is equal to the complementary work.

$$W = \overline{W} \tag{12-25}$$

The work given by area ABC and complementary area represented by area ABD complete the rectangle ACBD.

Concept 7—Virtual Displacement

The virtual displacement, like the real displacement, is a continuous function that satisfies the prescribed geometrical or displacement boundary conditions. Virtual displacement is applied to a structure that is already in equilibrium under load. The virtual displacement can

be considered as a small perturbation to a structure that is in equilibrium. The virtual displacement need not have any relationship to the actual displacement of the structure. The displacement is called a virtual displacement because it is hypothetical and not real. Consider a three-bar truss under load P, as shown in Fig. 12-4*a*. Because of load P, node D moves to D', producing the real displacements u and v along the coordinates x and y, respectively. The deformed structure $AD'C$ is in equilibrium, as shown in Fig. 12-4*b*. The concept of virtual displacement is illustrated by considering the three-bar truss in equilibrium as shown in Fig. 12-4*b*. This deformed structure is given a virtual displacement δu at D' along the negative x-coordinate direction. The virtual deformed configuration is shown in Fig. 12-4*c*. In strength of materials studies, displacements u and v are considered to be small in comparison to the dimension of the structure. Because of this assumption, the virtual displacement is applied to the real node D instead of its deformed position at D', as shown in Fig. 12-4*d*. This typical small displacement application introduces a very small inconsequential error in the response analysis of linear structures.

In comparing the actual and virtual displacements shown in Fig. 12-4*b* and *d*, we observe the following:

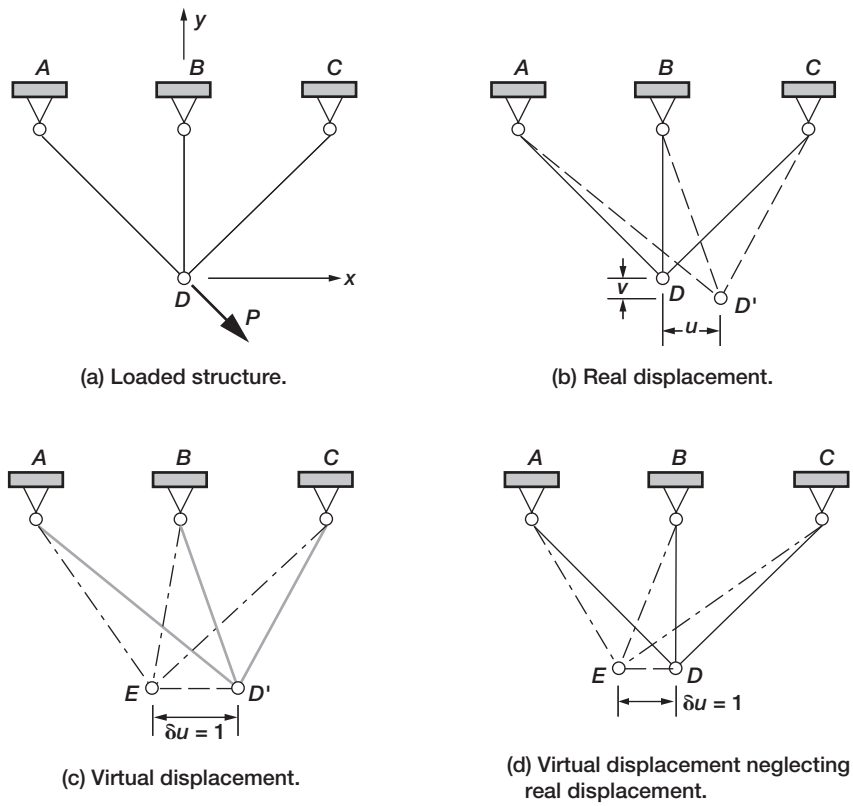

FIGURE 12-4 *Real and virtual displacement for a three-bar truss.*

1. Both the real and virtual displacements are continuous functions and satisfy all the specified geometrical boundary conditions at nodes A, B, and C in Fig. 12-4a.
2. The actual displacement (u, v) is in the same general direction as the load P, and the position D is displaced to the neighboring location D'.
3. The virtual displacement δu need not follow the general load direction. It can be arbitrary; here it is applied along the negative x-coordinate direction. It is traditional to consider a value of unity for the virtual displacement ($\delta u = 1$) at the application point or at D in Fig. 12-4d.

Concept 8—Virtual Force

Virtual force, the counterpart of virtual displacement, is a set of self-equilibrating forces that does not induce an external load in the structure. In the three-bar structure in Fig. 12-5a, the set of forces (F_1, F_2, and $F_3 = 1$) in the bars (DA, DB, DC), respectively, can represent virtual forces provided they induce no external load, or $P_x = P_y = 0$. It is customary to set one of the virtual force components to unity, or $F_3 = 1$. The remaining set of virtual forces (F_1 and F_2) can be determined either from the two equilibrium equations written at node D, or by using an auxiliary determination structure shown in Fig. 12-5b.

Virtual force from equilibrium equations: For the three-bar truss, consider F_1, F_2, and F_3 as the real bar forces and P_x and P_y as the loads. The equilibrium equations are obtained as the vectorial sum of the forces and loads at node D as

$$-\frac{F_1}{\sqrt{2}} + \frac{F_3}{\sqrt{2}} + P_x = 0 \tag{12-26a}$$

$$\frac{F_1}{\sqrt{2}} + F_2 + \frac{F_3}{\sqrt{2}} + P_y = 0 \tag{12-26b}$$

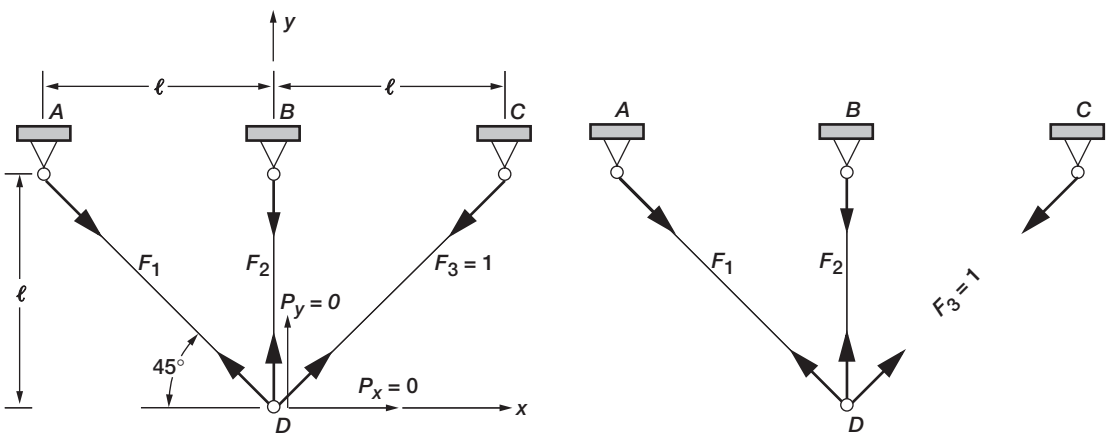

(a) Virtual force system. (b) Auxiliary structure.

FIGURE 12-5 *Virtual force for a three-bar truss.*

The forces (F_1, F_2, F_3) will represent a virtual system provided $P_x = 0$, $P_y = 0$, and $F_3 = 1$. The other two forces (F_1, F_2) are obtained by solving the two equilibrium Eqs. (12-26) as

$$F_1 = F_3 = 1$$

$$F_2 = -\frac{1}{\sqrt{2}}(F_1 + F_3) = -\sqrt{2}$$

$$\text{virtual force system } \{f\} = \begin{Bmatrix} 1 \\ -\sqrt{2} \\ 1 \end{Bmatrix} \tag{12-27}$$

The virtual force $\{f\}$ is self-equilibrating because it satisfies the equilibrium Eq. (12-26) and it does not induce an external load (or $P_x = P_y = 0$).

Virtual force from auxiliary structure: A two-bar auxiliary structure is obtained by removing the third bar DC as shown in Fig. 12-5*b*. The auxiliary structure must be determinate and stable. A unit force ($F_3 = 1$) is imposed in place of the third bar. Solution of the equilibrium equations of the auxiliary determinate structure yields the virtual forces $\{f\}$.

Equilibrium along the x-direction can be written as

$$-F_1 + F_3 = 0 \quad \text{or} \quad F_1 = F_3 = 1$$

Equilibrium along the y-direction yields

$$\frac{F_1}{\sqrt{2}} + F_2 + \frac{F_3}{\sqrt{2}} = 0 \quad \text{or} \quad F_2 = -\frac{1}{\sqrt{2}}(F_1 + F_3) = -\sqrt{2}$$

The virtual force $\{f\}$ becomes

$$\{f\} = \begin{Bmatrix} 1 \\ -\sqrt{2} \\ 1 \end{Bmatrix} \tag{12-28}$$

The virtual force obtained by the two methods given by Eqs. (12-27) and (12-28) agreed for the simple three-bar truss. In general, for a complex structure the virtual force $\{f\}$ may not be definable uniquely.

Concept 9—Virtual Work

The work done by a real force P moving through a virtual displacement δu is called the virtual work δW. It is defined as

$$\delta W = P\ \delta u \tag{12-29}$$

The coefficient in the definition of real work expression (in Eq. 12-23*b*) is half (1/2). This is because force induces displacement, or force and displacement are dependent on each other. In the definition of virtual work, given by Eq. (12-29) the coefficient is unity. This is because the real force P and virtual displacement δu are independent of each other. The virtual displacement is applied to the structure that is in equilibrium under load P.

Concept 10—Complementary Virtual Work

The complementary virtual work is another careful concept. It is defined as the work done by the virtual force δP moving through an actual real displacement u. It is defined as

$$\delta\overline{W} = (\delta P)u \tag{12-30}$$

The complementary virtual work expression also has a unity coefficient because the virtual force δP and displacement are independent of each other.

The energy concepts for strength of materials applications are summarized in Table 12-1.

The reader should remember the following attributes of the energy concepts.

1. Strain energy is a product of stress and strain.
2. Work is a product of force and displacement.
3. Virtual work is a product of the actual force and virtual displacement.
4. The title "complementary" is applied when a variation is in reference to force parameters (force or stress).
5. The variation in reference to displacement parameters (displacement and strain) has no title.
6. The traditional coefficient (1/2) is applied when force and displacement are linearly proportional.
7. The coefficient (1/2) is not applied when either force or displacement is a virtual parameter.
8. Energy is a quadratic expression when it is expressed in terms of strain or stress.

Energy Theorems

Ten energy theorems have been formulated utilizing the 10 energy concepts. The energy theorems provide an alternate procedure to derive the equations of strength of materials. These theorems can also be applied to generate solutions to problems. The theorems are stated first and then illustrated through a three-bar truss problem, earlier solved in Chapter 6 as an illustrative in Example 6-2.

Theorem 1—Principle of Virtual Work

The principle of virtual work is applicable to elastic structures of strength of materials that are made of deformable material. It is also applicable to rigid structures that cannot deform. The principle, for the sake of completeness, is developed for both rigid and elastic structures.

TABLE 12-1 Energy Concepts

	Concept	*Definition*	*Remark*
(1)	Strain energy density	$Ud = \frac{1}{2}E\varepsilon^2$	This is a quadratic in strain (ε).
(2)	Complementary strain energy density	$\overline{U}d = \frac{1}{2}\frac{\sigma^2}{E}$	This is a quadratic in stress (σ).
(3)	Strain energy density of total deformations	$U_d^t = \frac{1}{2}E(\varepsilon^t)^2 - E\varepsilon^i\varepsilon^t$	It has two terms. The first term is the usual quadratic in total strain (ε^t) with a coefficient of 1/2; the second term, with the negative sign, is a product of the initial strain (ε^i) and the total strain (ε^t) without the coefficient (1/2).
(4)	Complementary strain energy of deformation	$\overline{U}_d^t = \frac{\sigma^2}{2E} + \varepsilon^i\sigma$	It has two terms. The first term is a quadratic in stress. The second term is a product of the stress σ and the initial deformation ε^i without the coefficient (1/2) and without Young's modulus (E).
(5)	Work	$W = \frac{1}{2}Pu$	This is the product of force P and displacement u. The linear proportionality relation between the independent load and induced displacement is accounted for through the coefficient (1/2).
(6)	Complementary work	$\overline{W} = \frac{1}{2}uP$	It has the same algebraic form as work.
(7)	Virtual displacement	δu	Displacement is virtual. Traditionally unity is considered as the maximum component for virtual displacement.
(8)	Virtual force	δP	The force is virtual and its maximum component is unity.
(9)	Virtual work	$\delta W = P\delta u$	This is the product of the real force and the virtual displacement.
(10)	Complementary virtual work	$\delta\overline{W} = \delta Pu$	This is the product of the virtual force and the real displacement.

Part A—Principle of virtual work for a rigid body: ***The total virtual work done by all forces acting on a rigid body in static equilibrium is zero for small and admissible virtual displacements from the equilibrium state.*** In equation form it is written as

$$\delta W = 0 \tag{12-31a}$$

$$\delta W = \sum_{i=1}^{m} \Delta W_i = \sum_{i=1}^{m} P_i \Delta u_i = 0 \tag{12-31b}$$

where

δW total virtual work
P_i ith component of the applied real force
Δu_i ith component of the virtual displacement along P_i
m total number of force components

Consider the rigid body shown in Fig. 12-6 with prescribed boundary conditions at A, B, and C subjected to two loads (P_e, P_f) at E and F, respectively. The support at A is fixed, whereas supports at B and C can move along the x- and y-coordinate directions, respectively. The load P_e at E is along the x-direction, whereas the load P_f is along the y-direction.

Loads P_e and P_f are in equilibrium with the reactions. The reactions induced at support points A, B, and C counterbalance (or equilibrate) the applied loads. An admissible virtual displacement is shown by the dotted line in Fig. 12-6. The virtual displacement is arbitrary but admissible and it cannot deform the rigid body. An admissible displacement must satisfy two conditions. First it must satisfy the prescribed boundary conditions. The virtual displacement shown in Fig. 12-6 satisfies the imposed conditions.

1. Point A has no movement.
2. Point B with the roller support moves to B', which is admissible because the roller support allows displacement along the x-direction.
3. Point C moves to C' along the y-direction, which is also admissible.

Secondly, the virtual displacement must be much smaller in comparison to the dimensions of the rigid body. This condition is easily met when the maximum value of the virtual displacement is set to unity at any location in the rigid body. For clarity the displaced configuration marked by a dotted line is shown in an exaggerated scale.

The rigid body is subjected to two forces P_e and P_f. Let the virtual displacements along P_e and P_f be Δe and Δf, as shown in Fig. 12-6. The virtual work (ΔW) done by the two forces can be written as

$$\Delta W = P_e(-\Delta e) + P_f(-\Delta f) = 0 \tag{12-32a}$$

The negative sign in the virtual displacement term suggests movement opposite to that of the forces, as shown in Fig. 12-6.

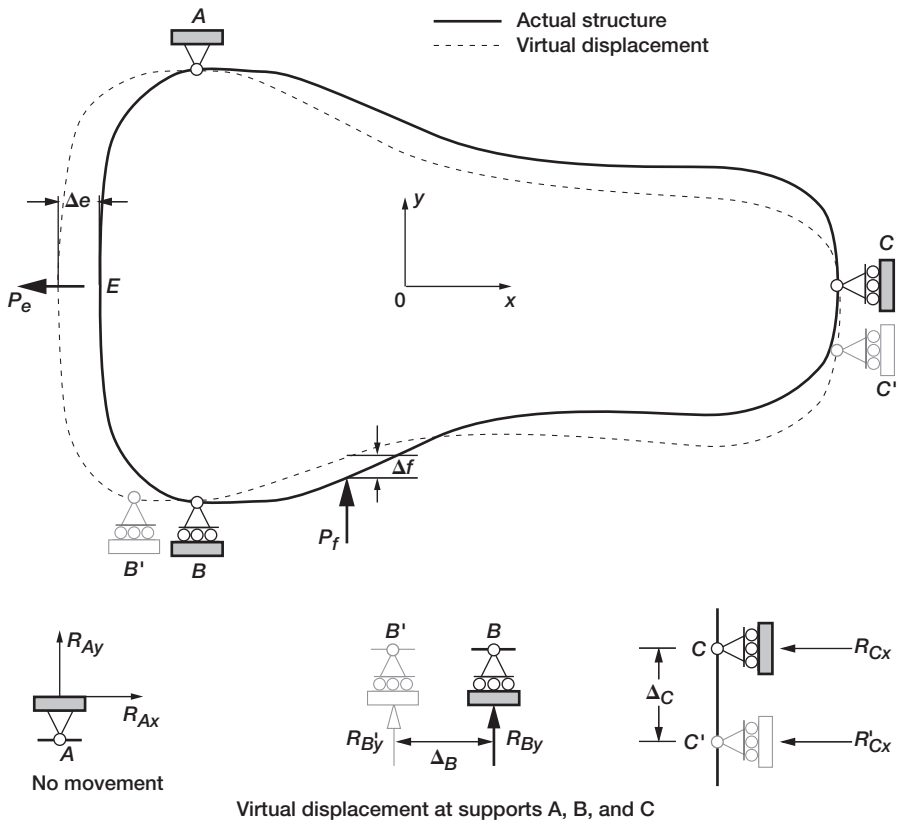

FIGURE 12-6 *Virtual force for a rigid body.*

The supports induce reactions and displace virtually, but no virtual work is done because virtual displacements are zero along the direction of the reactions.

Support A: Reactions are R_{Ax} and R_{Ay} along the x- and y-directions as shown in Fig. 12-6. Virtual displacements are zero along the R_{Ax} and R_{Ay} reaction directions. Reaction R_{By} at support B is along the y-direction, but there is no accompanying virtual displacement along that direction. Likewise, at support C, the reaction R_{Cx} and virtual displacement ΔC are along different directions. By definition, a rigid body cannot deform, or no work is done internal to the rigid body. The only virtual work is done by the forces P_e and P_f given by Eq. (12-32a). The virtual work principle for the rigid structure can be written as

$$\Delta W = -\left(P_e \Delta e + P_f \Delta f\right) = 0 \qquad (12\text{-}32b)$$

Part B—Virtual work principle for deformable bodies: Internal virtual work is done in the interior of a deformable body. This work has to be accounted for in the virtual work principle for deformable bodies. This theorem, which is applicable to strength of materials problems, is stated as follows:

For the deformable body in equilibrium, the sum of the virtual work done by the internal and external forces in admissible virtual displacement is zero.

$$\delta W = \Delta W_I - \Delta W_E = 0 \tag{12-33a}$$

or

$$\Delta W_I = \Delta W_E \tag{12-33b}$$

Internal virtual work ΔW_I is equal to external virtual work ΔW_E.

$$\Delta W_I = \sum_{i=1}^{n} F_i \ \Delta\beta_i = \Delta U \tag{12-34a}$$

$$\Delta W_E = \sum_{i=1}^{m} P_i \ \Delta x_i = \Delta W \tag{12-34b}$$

Internal virtual work ΔW_I is also symbolized as ΔU. It is the product of real internal forces F_i induced in a structure because of external forces that are also referred to as loads P_i. Consider the three-bar truss shown in Fig. 12-7. It is fully restrained at nodes 2, 3, and 4. Node 1 is free to displace along the x- and y-directions. The real external loads (P_x, P_y) induce real internal forces (F_1, F_2, F_3) in the three bars. The internal forces (F_1, F_2, F_3) are in equilibrium with the loads (P_x, P_y).

From the equilibrium position, node 1 is virtually displaced by Δu and Δv along the x- and y-directions, respectively. This displacement is permissible because supports 2, 3, and 4 do not move and Δu and Δv are much smaller than the dimension ℓ of the truss. The virtual displacements (Δu, Δv) induce virtual deformations ($\Delta\beta_1$, $\Delta\beta_2$, $\Delta\beta_3$) in the three bars. These deformations can be related to displacement using the geometrical parameters of the three-bar truss. Deformation $\Delta\beta_1$ is obtained by projecting the virtual displacements (Δu and Δv) along bar 1. The contribution to $\Delta\beta_1$ from Δu is ($\Delta u/\sqrt{2}$) because $\theta = 45°$ (see Fig. 12-7c). Likewise, the contribution from Δv is ($-\Delta v/\sqrt{2}$). The negative sign indicates compression. Total virtual deformation $\Delta\beta_1$ is obtained as the sum of the two contributions.

$$\Delta\beta_1 = \frac{\Delta u - \Delta v}{\sqrt{2}} \tag{12-35a}$$

Likewise, $\Delta\beta_2$ and $\Delta\beta_3$ are obtained as

$$\Delta\beta_2 = -\Delta v \tag{12-35b}$$

$$\Delta\beta_3 = -\frac{\Delta u + \Delta v}{\sqrt{2}} \tag{12-35c}$$

The external virtual work ΔW is obtained as the product of the real loads (P_x, P_y) undergoing virtual displacement (Δu, Δv) as

$$\Delta W = P_x \ \Delta u + P_y \ \Delta v \tag{12-36a}$$

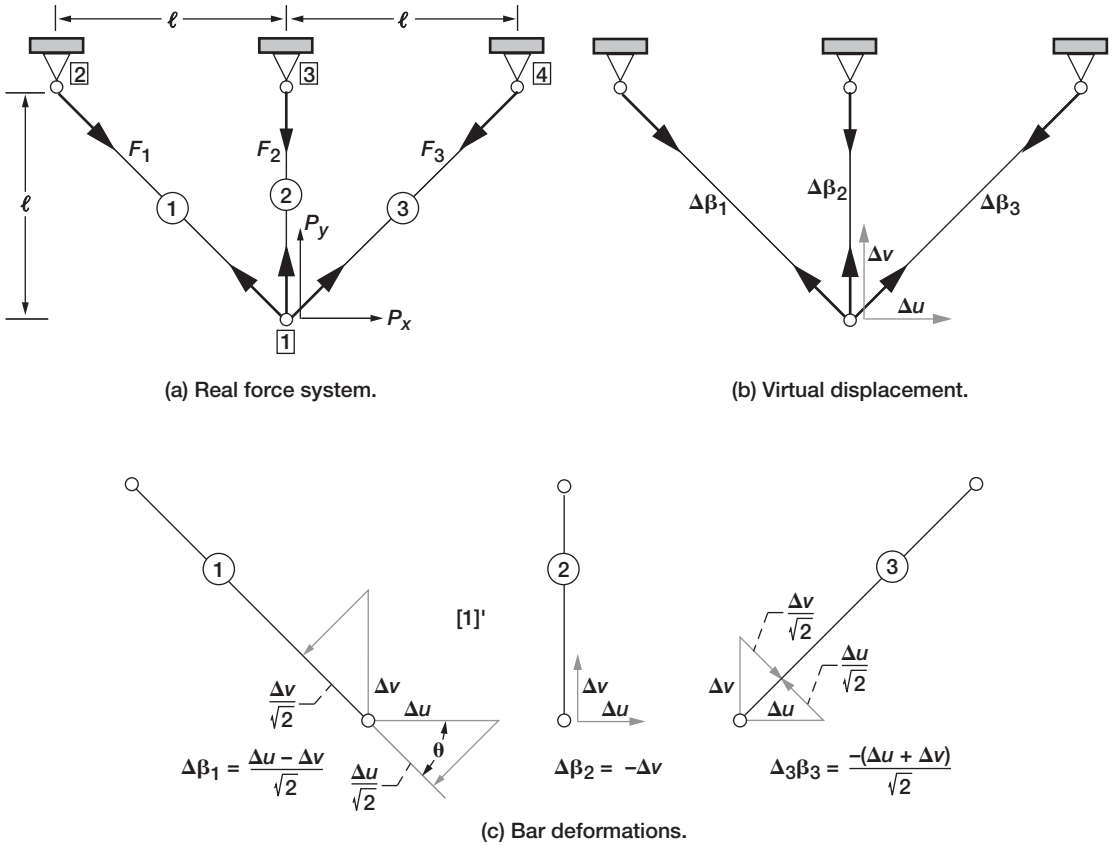

FIGURE 12-7 *Virtual work principle for a three-bar truss.*

The internal virtual work ΔU is calculated as the product of the real internal forces (F_1, F_2, F_3) and virtual deformation ($\Delta\beta_1$, $\Delta\beta_2$, $\Delta\beta_3$) as

$$\begin{aligned}\Delta U &= F_1\ \Delta\beta_1 + F_2\ \Delta\beta_2 + F_3\ \Delta\beta_3 \\ &= F_1\left(\frac{\Delta u - \Delta v}{\sqrt{2}}\right) - F_2 \quad \Delta v - F_3\left(\frac{\Delta u - \Delta v}{\sqrt{2}}\right)\end{aligned} \tag{12-36b}$$

The principle of virtual work ($\Delta U - \Delta W = 0$) for the three-bar truss yields

$$\Delta U - \Delta W = \left(\frac{F_1}{\sqrt{2}} - \frac{F_3}{\sqrt{2}} - P_x\right)\Delta u + \left(-\frac{F_1}{\sqrt{2}} - F_2 - \frac{F_3}{\sqrt{2}} - P_y\right)\Delta v = 0 \tag{12-37}$$

The virtual displacements (Δu, Δv) are arbitrary but nontrivial ($\Delta u \neq 0$, $\Delta v \neq 0$). Therefore, the coefficient of Δu and Δv must be set to zero to satisfy Eq. (12-37).

$$\frac{F_1}{\sqrt{2}} - \frac{F_3}{\sqrt{2}} = P_x \tag{12-38a}$$

$$-\frac{F_1}{\sqrt{2}} - F_2 - \frac{F_3}{\sqrt{2}} = P_y \tag{12-38b}$$

or in matrix notation,

$$\begin{bmatrix} \frac{1}{\sqrt{2}} & 0 & -\frac{1}{\sqrt{2}} \\ -\frac{1}{\sqrt{2}} & -1 & -\frac{1}{\sqrt{2}} \end{bmatrix} \begin{Bmatrix} F_1 \\ F_2 \\ F_3 \end{Bmatrix} = \begin{Bmatrix} P_x \\ P_y \end{Bmatrix} \tag{12-38c}$$

Equation (12-38) represents the equilibrium equation of the three-bar truss. The same equation was obtained earlier from the nodal equilibrium equations. The reader must remember that the principle of virtual work yields the equilibrium equation.

Theorem 2—Principle of Minimum Potential Energy

The principle of minimum potential energy is an important variational theorem of solid mechanics. The theorem in analytical form is defined as

$$\delta_x[\pi_p] = 0 \tag{12-40a}$$

where $\pi_p = U - W_p$ is called the potential energy functional, U is the strain energy, W_p is the potential of the external load, and δ_x is the variational symbol and represents variation with respect to the displacement x.

The variation is performed with respect to admissible displacement. The minimum principle is stated as follows:

Among all the admissible displacement states, the actual displacements make the total potential energy functional π_p stationary

$$\delta_x[\pi_p] = \delta_x(U - W_p) = 0 \tag{12-40b}$$

The theorem yields the equations of the stiffness method as well as the equilibrium equations. Both cases are illustrated considering the three-bar truss as an example.

Stiffness method for the three-bar truss: The potential functional π_p for the three-bar truss shown in Fig. 12-7*a* can be written as

$$\pi = U - W_p \tag{12-41}$$

where U is the total strain energy stored in the three-bar truss (see Fig. 12-7*a*), W_p is the potential of loads P_x and P_y. The energy U is obtained by adding the internal energies in the

three individual bars. The energy is expressed in terms of the three strains (ε_1, ε_2, ε_3) in the three bars as

$$U = \frac{1}{2}E\left\{\int_{\text{Bar1}} \varepsilon_1^2\, dv_1 + \int_{\text{Bar2}} \varepsilon_2^2\, dv_2 + \int_{\text{Bar3}} \varepsilon_3^2\, dv_3 \right\} \tag{12-42a}$$

The strain in the ith bar can be written in displacement u that is along the member length as

$$\varepsilon_i = \left(\frac{du}{dx}\right)_i \qquad (i = 1, 2, 3) \tag{12-42b}$$

The elemental volume dV_i for the ith bar can be calculated as

$$dV_i = A_i\, d\ell_i \quad (i = 1, 2, 3) \tag{12-42c}$$

where A_i and $d\ell_i$ are the area and incremental length for the ith bar.

The displacements of the bars are shown in Fig. 12-8. Consider the displacement functions of bar 1. The axial displacement is u and the transverse component is v. The origin of the coordinate system (x, y) is taken at node 2.

$$\begin{aligned} u(x) &= -\frac{x}{2\ell}(u_1 - v_1) \\ v(x) &= \frac{x}{2\ell}(u_1 + v_1) \end{aligned} \tag{12-42d}$$

The displacement functions satisfy the boundary conditions at node 2 because

$$\begin{aligned} u(x) &= 0 \quad \text{at} \quad x = 0 \\ v(x) &= 0 \quad \text{at} \quad x = 0 \end{aligned} \tag{12-42e}$$

The displacement functions given by Eq. (12-42d) are permissible because these are continuous functions and they satisfy the prescribed boundary conditions. The strain ε_1 in bar 1 depends on axial displacement u along the x-axis, which is along the bar length. The transverse displacement v does not induce strain in the bar. The strain in the bar is obtained as

$$\varepsilon_1 = \frac{du}{dx} = \frac{d}{dx}\left\{\frac{x}{2\ell}(u_1 - v_1)\right\} = \frac{(u_1 - v_1)}{2\ell} \tag{12-42f}$$

The strain is uniform across the length of the bar. Likewise, admissible displacement functions (see Fig. 12-8b) for bar 2 are obtained as

$$u(x) = -\frac{x}{\ell}v_1 \tag{12-42g}$$

$$v(x) = \frac{x}{\ell}u_1 \tag{12-42h}$$

The uniform strain in bar 2 is obtained as

$$\varepsilon_2 = \frac{du}{dx} = -\frac{v_1}{\ell} \tag{12-42i}$$

Admissible displacement functions for bar 3 can be written as (see Fig. 12-8*c*)

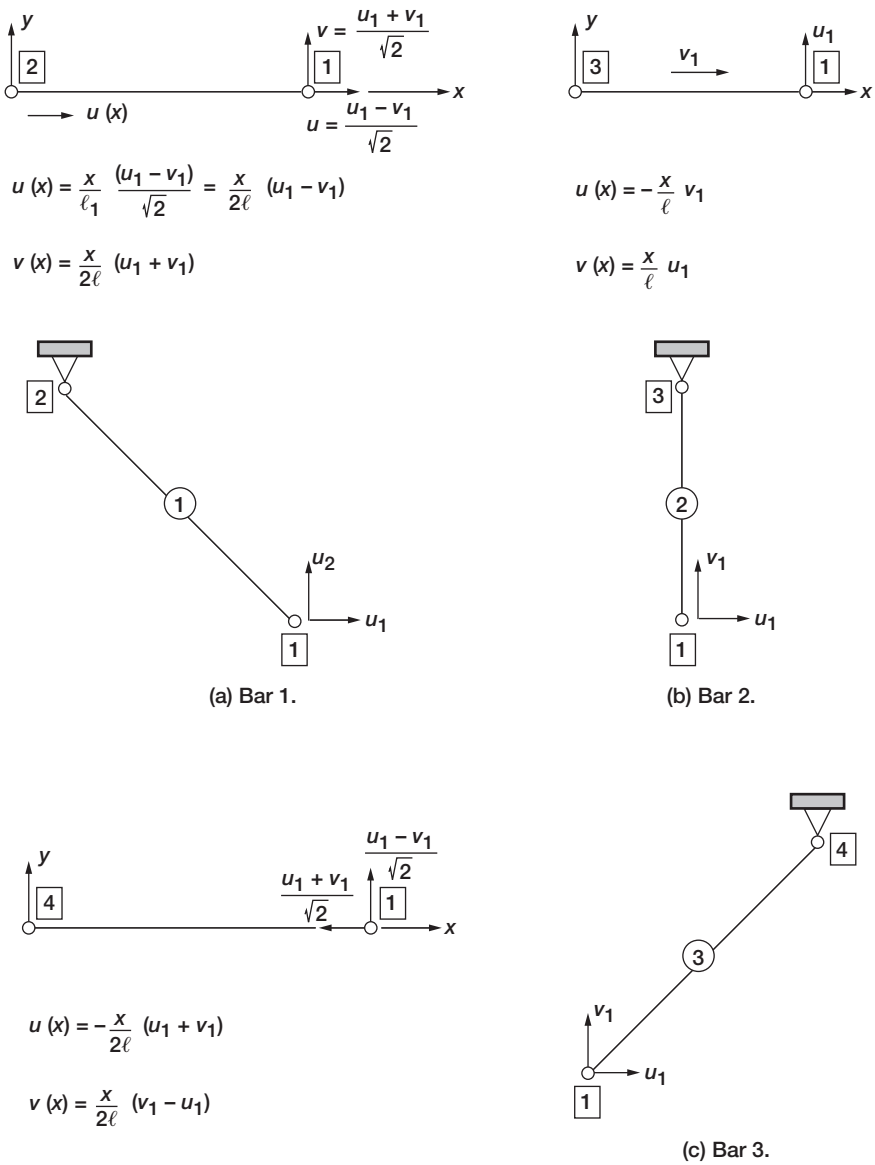

FIGURE 12-8 *Displacement functions for a three-bar truss.*

$$u(x) = -\frac{x}{2\ell}(u_1 + v_1) \tag{12-42j}$$

$$v(x) = \frac{x}{2\ell}(v_1 - u_1) \tag{12-42k}$$

Strain ε_3 in bar 3 is calculated as

$$\varepsilon_3 = \frac{du}{dx} = -\frac{(u_1 + v_1)}{2\ell} \tag{12-43}$$

The strain energy stored in bar 1 is obtained from Eqs. (12-1), (12-6*a*), and (12-42*f*) as

$$U_1 = \int_V U_d dV = \int_0^{\ell\sqrt{2}} \left(\frac{1}{2}E\varepsilon_1^2\right) A_1 dx = \frac{1}{2}A_1 E \int_0^{\ell\sqrt{2}} \varepsilon_1^2 dx = \frac{1}{2}A_1 E \int_0^{\ell\sqrt{2}} \left\{\frac{-(u_1 - v_1)}{2\ell}\right\}^2 dx \tag{12-44}$$

or

$$U_1 = \frac{A_1 E}{4\sqrt{2}\ell}(u_1 - v_1)^2 \tag{12-45a}$$

The strain energy U_1 is a quadratic in displacements u_1 and v_1. In the calculation of strain energy U_1, it is assumed that the bar has a uniform cross-sectional area A_1 and that the Young's modulus E is constant. Likewise, strain energies in the second bar and third bar are obtained as

$$U_2 = \frac{A_2 E}{2\ell} v_1^2 \tag{12-45b}$$

$$U_3 = \frac{A_3 E}{4\sqrt{2}\ell}(u_1 + v_1)^2 \tag{12-45c}$$

The total strain energy stored in the three-bar truss is obtained by adding the bar energies as

$$\begin{aligned} U &= U_1 + U_2 + U_3 \\ &= \frac{E}{2\ell}\left\{\frac{A_1}{2\sqrt{2}}(u_1 - v_1)^2 + A_2 v_1^2 + \frac{A_3}{2\sqrt{2}}(u_1 + v_1)^2\right\} \end{aligned}$$

or

$$= \frac{E}{4\sqrt{2}\ell}\left\{u_1^2(A_1 + A_3) + 2u_1 v_1(A_3 - A_1) + v_1^2\left(A_1 + 2\sqrt{2}A_2 + A_3\right)\right\} \tag{12-46}$$

The strain energy U is a quadratic function in nodal displacement (u_1, v_1).

Potential of external load: The potential of the external load is equal to twice the amount of work that can be done by the load. The work done by loads of the three-bar truss is obtained as

$$W = \frac{1}{2}P_x u_1 + \frac{1}{2}P_y u_2. \tag{12-47a}$$

where the external load P_x moves through the displacement u_1, as shown in Fig. 12-7a, and P_y moves through u_2.

The potential of the load is twice the amount of work as

$$W_p = 2W = P_x u_1 + P_y u_2 \tag{12-47b}$$

The potential function is obtained from the strain energy and the potential of the load as

$$\pi_p = U - W_p$$

or

$$\pi_p = \frac{E}{4\sqrt{2}\ell}\left\{u_1^2(A_1 + A_2) + 2u_1 v_1(A_3 - A_1) + v_1^2\left(A_1 + 2\sqrt{2}A_2 + A_3\right)\right\} - \left(P_x u_1 + P_y v_1\right) \tag{12-48}$$

The displacements (u_1, v_1) at node 1 are the two unknowns of the potential functional π_p. The bar areas (A_1, A_2, A_3) and dimension ℓ are preassigned parameters. The Young's modulus E and loads (P_x, P_y) are also given quantities. Values of the potential function π_p can be calculated for different sets of values of displacement (u_1, v_1). The correct values of the displacements (u_1, v_1) make the potential function π_p stationary with respect to u_1 and v_1.

$$\delta\pi_p = 0$$

or

$$\delta\pi_p = \frac{\partial\pi_p}{\partial u_1}\delta u_1 + \frac{\partial\pi_p}{\partial v_1}\delta v_1 = 0 \tag{12-49}$$

Because δu_1 and δv_1 are arbitrary and nonzero ($\delta u_1 \neq 0$, $\delta v_1 \neq 0$), their coefficient must vanish to satisfy Eq. (12-49).

$$\frac{\partial\pi_p}{\partial u_1} = 0 \tag{12-50a}$$

$$\frac{\partial\pi_p}{\partial v_1} = 0 \tag{12-50b}$$

From Eqs. (12-50) and (12-48) we obtain

$$\frac{\partial\pi_p}{\partial u_1} = \frac{E}{2\ell}\left\{\frac{A_1 + A_3}{\sqrt{2}}u_1 + \frac{(A_3 - A_1)}{\sqrt{2}}v_1\right\} - P_x = 0 \tag{12-51a}$$

$$\frac{\partial\pi_p}{\partial v_1} = \frac{E}{2\ell}\left\{\frac{(A_3 - A_1)}{\sqrt{2}}u_1 + \left(2A_2 + \frac{A_1 + A_3}{\sqrt{2}}\right)v_1\right\} - P_y = 0 \tag{12-51b}$$

The two equations in matrix notation with displacements (u_1, v_1) as the unknowns can be written as

$$E\begin{bmatrix} \dfrac{(A_1+A_3)}{2\sqrt{2}\ell} & \dfrac{(A_3-A_1)}{2\sqrt{2}\ell} \\ \dfrac{(A_3-A_1)}{2\sqrt{2}\ell} & \dfrac{A_2}{\ell}+\dfrac{A_1+A_3}{2\sqrt{2}\ell} \end{bmatrix}\begin{Bmatrix} u_1 \\ v_1 \end{Bmatrix} = \begin{Bmatrix} P_x \\ P_y \end{Bmatrix} \tag{12-52}$$

Equation (12-52) represents the stiffness method for the three-bar truss. It is obtained from the stationary condition of the potential functional π_p. The coefficient matrix is called the stiffness matrix $[K]$. In symbolic form Eq. (12-52) can be written as

$$[K]\{X\} = \{P\} \tag{12-53}$$

where $[K]$ is the (2×2) symmetrical stiffness matrix and it is defined as

$$[K] = E\begin{bmatrix} \dfrac{(A_1+A_3)}{2\sqrt{2}\ell} & \dfrac{(A_3-A_1)}{2\sqrt{2}\ell} \\ \dfrac{A_3-A_1}{2\sqrt{2}\ell} & A_2+\dfrac{A_1+A_3}{2\sqrt{2}\ell} \end{bmatrix} \tag{12-54a}$$

$\{X\}$ is the displacement vector

$$\{X\} = \begin{Bmatrix} u_1 \\ v_1 \end{Bmatrix} \tag{12-54b}$$

$\{P\}$ is the load vector

$$\{P\} = \begin{Bmatrix} P_x \\ P_y \end{Bmatrix} \tag{12-54c}$$

Equilibrium equations expressed in terms of displacement: The equilibrium equations are normally written in force variables, see Eq. (12-38). The EE expressed in terms of displacement variables become the stiffness method. Consider the equilibrium equation of the three-bar truss (see Eq. 12-38):

$$\frac{1}{\sqrt{2}}F_1 - \frac{1}{\sqrt{2}}F_3 = P_x$$

$$-\frac{1}{\sqrt{2}}F_1 - F_2 - \frac{1}{\sqrt{2}}F_3 = P_y \tag{12-54d}$$

Bar forces can be expressed in terms of displacements (u, v) as follows:

$$F_1 = A_1\sigma_1 = A_1E\varepsilon_1 = \frac{A_1E}{2\ell}(u_1 - v_1) \tag{12-55a}$$

$$F_2 = A_2\sigma_2 = A_2E\varepsilon_2 = -\frac{A_2E}{\ell}v_1 \tag{12-55b}$$

$$F_3 = A_3\sigma_3 = A_3E\varepsilon_3 = -\frac{A_3E}{2\ell}(u_1 + v_1) \tag{12-55c}$$

Eliminate bar forces (F_1, F_2, F_3) in favor of displacements (u_1, v_1) between Eqs. (12-54d) and (12-55).

The first equilibrium equation in displacement can be written as

$$\frac{A_1E}{2\sqrt{2}\ell}(u_1 - v_1) + \frac{A_3E}{2\sqrt{2}\ell}(u_1 + v_1) = P_x$$

Likewise, the second equilibrium equation in displacements is obtained as

$$-\frac{A_1E}{2\sqrt{2}\ell}(u_1 - v_1) + \frac{A_2E}{\ell}v_1 + \frac{A_3E}{2\sqrt{2}\ell}(u_1 + v_1) = P_y$$

or

$$\frac{E}{2\sqrt{2}\ell}(A_3 - A_1)u_1 + \frac{E}{2\sqrt{2}\ell}\left(A_1 + 2\sqrt{2}A_2 + A_3\right)v_1 = P_y \tag{12-56}$$

Equation (12-56) in matrix notation can be written as

$$E\begin{bmatrix} \dfrac{(A_1 + A_3)}{2\sqrt{2}\ell} & \dfrac{(A_3 - A_1)}{2\sqrt{2}\ell} \\ \dfrac{(A_3 - A_1)}{2\sqrt{2}\ell} & \dfrac{1}{2\sqrt{2}\ell}\left(A_1 + 2\sqrt{2}A_2 + A_3\right) \end{bmatrix}\begin{Bmatrix} u_1 \\ v_1 \end{Bmatrix} = \begin{Bmatrix} P_x \\ P_y \end{Bmatrix} \tag{12-57}$$

Equation (12-57) is identical to the stiffness method given by Eq. (12-38), as expected. Stiffness equations are obtained when the equilibrium equations are expressed in the displacement variables.

Equilibrium Equations from the Potential Energy Function

The normal equilibrium equations expressed in force variables can also be obtained from the stationary condition of the potential energy functional. Consider the three-bar truss for illustration. The potential energy functional π_p can be written as

$$\pi_p = U - W_p \tag{12-58}$$

The variable U represents the total strain energy stored in the three bars.

$$U = U_1 + U_2 + U_3$$

The strain energy in the bar can be expressed in terms of force and displacement variables. Force F in a bar can be expressed in terms of stress σ and bar area A as

$$\sigma = \frac{F}{A} \tag{12-59}$$

It has already been observed that strain ε is uniform across the bar length.

Strain energy density in a bar can be expressed from Eq. (12-4) as

$$U_d = \int_0^{\varepsilon} \sigma \, d\varepsilon = \sigma\varepsilon = \left(\frac{F}{A}\right)\varepsilon \tag{12-60}$$

For a bar member with a uniform cross-sectional area of A_1, the force F and strain ε remain constant across the bar length, and the strain energy can be written as

$$U = \int_V U_d dV = \int_\ell \left(\frac{F}{A}\right)\varepsilon \, A \, d\ell = F\ell\varepsilon \tag{12-61}$$

The strain energy stored in the three bars of the truss can be obtained

$$U_1 = (F\ell\varepsilon)_{\text{bar1}} = F_1\ell\sqrt{2}\frac{(u_1 - v_1)}{2\ell} = F_1\frac{(u_1 - v_1)}{\sqrt{2}} \tag{12-62a}$$

$$U_2 = (F\ell\varepsilon)_{\text{bar2}} = F_2\ell\left(-\frac{v_1}{\ell}\right) = -F_2 v_1 \tag{12-62b}$$

$$U_3 = (F\ell\varepsilon)_{\text{bar3}} = F_3\ell\sqrt{2}\left\{-\frac{(u_1 + v_1)}{2\ell}\right\} = -\frac{F_3}{\sqrt{2}}(u_1 + v_1) \tag{12-62c}$$

The potential function π_p can be written as

$$\begin{aligned}\pi_p &= U_1 + U_2 + U_3 - W_p \\ &= \frac{F_1(u_1 - v_1)}{\sqrt{2}} - F_2 v_1 - \frac{F_3}{\sqrt{2}}(u_1 + v_1) - \left(P_x u_1 + P_y v_1\right)\end{aligned}$$

or

$$= \frac{(F_1 - F_3)}{\sqrt{2}}u_1 - \left(\frac{F_1}{\sqrt{2}} + F_2 + \frac{F_3}{\sqrt{2}}\right)v_1 - \left(P_x u_1 + P_y v_1\right) \tag{12-63}$$

The stationary condition of the function π_p yields the equilibrium equations:

$$\frac{\partial \pi_p}{\partial u_1} = 0 \Rightarrow \frac{F_1 - F_3}{\sqrt{2}} - P_x = 0 \tag{12-64a}$$

$$\frac{\partial \pi_p}{\partial v_1} = 0 \Rightarrow -\left(\frac{F_1}{\sqrt{2}} + F_2 + \frac{F_3}{2}\right) - P_y = 0 \tag{12-64b}$$

The equilibrium equations in matrix notation can be written as

$$\begin{bmatrix} \frac{1}{\sqrt{2}} & 0 & -\frac{1}{\sqrt{2}} \\ -\frac{1}{\sqrt{2}} & 1 & -\frac{1}{\sqrt{2}} \end{bmatrix} \begin{Bmatrix} F_1 \\ F_2 \\ F_3 \end{Bmatrix} = \begin{Bmatrix} P_x \\ P_y \end{Bmatrix} \tag{12-65}$$

The equilibrium equations given by Eq. (12-60) are identical to the same given by Eq. (12-38*c*).

The principle of minimum potential energy is one of the most important theorems of strength of materials. The reader must remember the following attributes of this theorem:

1. The potential energy functional is defined as the difference between the strain energy stored in a structure and the potential of the load.

$$\pi_p = u - W_p$$

2. The functional π_p when expressed in terms of a displacement variable becomes a quadratic function in that variable. This functional expressed in force and displacement variables is a linear function in either variable.
3. The stationary condition of π_p is taken with respect to the displacements

$$\delta\pi_p = \frac{\partial \pi_p}{\partial u_1}\delta u_1 + \frac{\partial \pi_p}{\partial u_2}\delta u_2 = 0$$

4. At the stationary condition, the value of the potential functional is a minimum. It is negative and is equal to the work done (W) by the loads.

$$(\pi_p)_{\min} = -W$$

   This attribute of the potential energy function is not proved here.
5. The stationary condition of the potential energy functional yields the equilibrium equations.
6. The equilibrium equations, when expressed in displacement variables become the stiffness method.

Theorem 3—Castigliano's First Theorem

Castigliano has formulated two theorems. The first theorem concerns strain energy. The second theorem is cast in terms of complementary strain energy. The theorems are used to calculate displacement and reactions in a structure. The statement for the first theorem follows:

Let an elastic structure be in equilibrium under external loads ($P_1, P_2, \ldots, P_m$). Let X_r be the displacement at the point of the application of load P_r and along the direction X_r. The

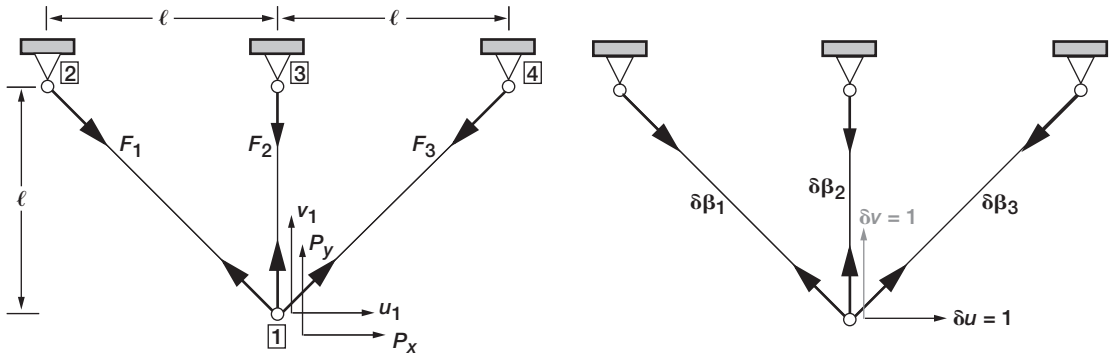

(a) Real system.

(b) Virtual system.

FIGURE 12-9 *Castigliano's first theorem for a three-bar truss.*

partial derivative of the strain energy with respect to the displacement X_r is equal to the load P_r. Mathematically, the theorem can be written as

$$\frac{\partial U}{\partial X_r} = P_r \tag{12-66}$$

For the purpose of illustration, consider the three-bar truss subjected to load P as shown in Fig. 12-9. The truss is made of steel with Young's modulus E. The areas of the bars all equal to 1 in.^{2} ($A_1 = A_2 = A_3 = 1.0\,\text{in.}^2$). The theorem requires the strain energy. It is obtained from Eq. (12-46) for unit bar areas.

$$U = \frac{E}{4\sqrt{2}\ell}\left(2u_1^2 + 2\left(1+\sqrt{2}\right)v_1^2\right) \tag{12-67}$$

The displacements (u_1, v_1) can be calculated from an application of the theorem, as follows:

$$\frac{\partial U}{\partial u_1} = P_x \tag{12-68a}$$

$$\frac{\partial U}{\partial v_1} = P_y \tag{12-68b}$$

Substitution of U from Eq. (12-67) into Eq. (12-68a) yields the displacement u_1.

$$\frac{E}{\sqrt{2}\ell}u_1 = P_x \quad \text{or} \quad u_1 = \frac{P_x\sqrt{2}\ell}{E} \tag{12-69a}$$

Likewise, the substitution of U in Eq. (12-68b) yields the displacement v_1

$$\frac{E(1+\sqrt{2})}{\sqrt{2}\ell} v_1 = P_y$$

or

$$v_1 = \frac{\sqrt{2}\ell P_y}{(1+\sqrt{2})E} = 0.586\frac{P_y \ell}{E} \tag{12-69b}$$

The displacements (u_1, v_1) obtained from the first theorem are also the solution to the stiffness Eq. (12-52) obtained from the principle of minimum potential energy. Equation (12-52) for areas $A_1 = A_2 = A_3 = 1$ in.^{2} can be written as

$$\begin{bmatrix} \dfrac{E\ell}{\sqrt{2}} & 0 \\ 0 & \dfrac{E(1+\sqrt{2})}{\sqrt{2}\ell} \end{bmatrix} \begin{Bmatrix} u_1 \\ v_1 \end{Bmatrix} = \begin{Bmatrix} P_x \\ P_y \end{Bmatrix} \tag{12-70}$$

Solution of Eq. (12-70) yields the displacements (u_1 and v_1) given by Eq. (12-69). The principle of minimum potential energy and Castigliano's first theorem yield the same equations because they are related. If displacements are known, then the external load that produces the displacement can be calculated from the first theorem. The reverse course is also possible because the number of displacement and load components are equal (here, $m = 2$).

Castigliano's First Theorem from the Principle of Minimum Potential Energy

The principle of minimum potential energy can be specialized to obtain the first theorem. Consider an elastic structure that is in equilibrium under external loads ($P_1, P_2, \ldots, P_m$). Its deformed and underformed configurations are shown in Fig. 12-10. The potential of the loads can be written as

$$W_p = P_1 u_1 + P_2 u_2 + \cdots + P_m u_m \tag{12-71}$$

where the displacements (u_1, $u_2, \ldots, u_m$) are at and along the directions of the loads ($P_1, P_2, \ldots, P_m$), respectively. The potential function π_p can be written as

$$\begin{aligned} \pi_p &= U - W_p \\ &= U - P_1 u_1 + P_2 u_2 + \cdots + P_m u_m \end{aligned} \tag{12-72}$$

The minimum condition of π_p can be written as

$$\delta\pi_p = \frac{\partial \pi_p}{\partial u_1}\delta u_1 + \frac{\partial \pi_p}{\partial u_2}\delta u_2 + \cdots + \frac{\partial \pi_p}{\partial u_m}\delta u_m = 0 \tag{12-73a}$$

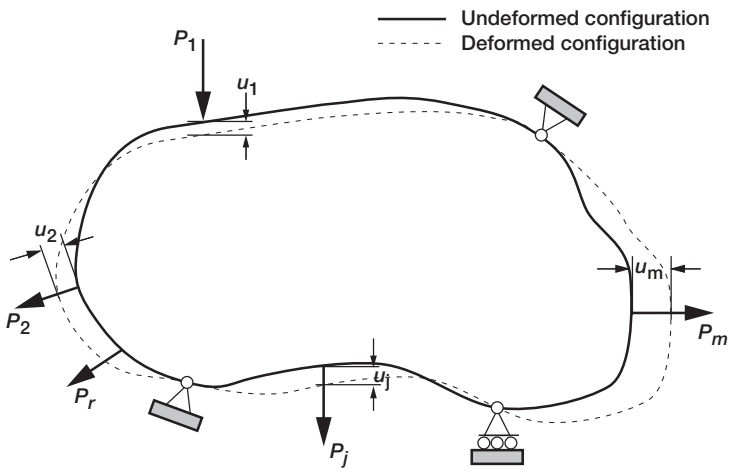

FIGURE 12-10 *Elastic structure under loads, $P_1, P_2, \ldots, P_m$.*

The incremental displacements are arbitrary and nonzero.

$$\delta u_i \neq 0 \quad (i = 1, 2, \ldots, m) \tag{12-73b}$$

From Eqs. (12-73*a*) and (12-73*b*) we conclude that

$$\frac{\partial \pi_p}{\partial u_i} = 0 \tag{12-73c}$$

$$\frac{\partial}{\partial u_i}\left(U - W_p\right) = 0 \tag{12-73d}$$

or

$$\frac{\partial U}{\partial u_i} - P_i = 0 \qquad (i - 1, 2, \ldots, m) \tag{12-74a}$$

or

$$\frac{\partial U}{\partial X_r} = P_r \tag{12-74b}$$

Equation (12-74*b*) is identical to Castigliano's first theorem given by Eq. (12-66) because the symbolic displacement (u_i) can be replaced by (X_r), without a consequence.

Theorem 4—Unit Displacement Theorem

The principle of virtual work can be specialized to obtain the unit displacement theorem. Let σ represent the stress in a structure in equilibrium (under load P_r). Apply a virtual displace-

ment δu_r at the point of application and in the direction of load P_r. Let $\delta\varepsilon$ represent the virtual strain in the structure.

The virtual strain energy δU is defined as

$$\delta U = \int_V \sigma \delta \varepsilon dv \tag{12-75a}$$

Likewise, the virtual work can be written as

$$\delta W = P_r \delta u_r \tag{12-75b}$$

The virtual strain energy is equal to the virtual work, or

$$\delta U = \delta W \tag{12-75c}$$

or

$$P_r \delta u_r = \int_V \sigma \delta \varepsilon dv \tag{12-75d}$$

Let us assume the value of the virtual displacement to be unity ($\delta u_r = 1$), and the induced strain to be $\delta\varepsilon$. Equation (12-75d) can be written as

$$P_r = \int_V \sigma \delta \varepsilon dv \tag{12-76}$$

Equilibrium equations can be derived from an application of the unit displacement theorem.

Consider the three-bar truss subjected to loads (P_x, P_y) at node 1 as shown in Fig. 12-9a. Let the forces induced in the bar be F_1, F_2, and F_3. Apply the unit virtual displacements ($\delta u = 1$, $\delta v = 1$) one at a time at node 1, as shown in Fig. 12-9b.

The induced deformations in the bar are obtained from Eq. (12-35) as

$$\begin{Bmatrix} \delta\beta_1 \\ \delta\beta_2 \\ \delta\beta_3 \end{Bmatrix}_{\delta u=1} = \begin{Bmatrix} \frac{1}{\sqrt{2}} \\ 0 \\ -\frac{1}{\sqrt{2}} \end{Bmatrix} \tag{12-77a}$$

$$\begin{Bmatrix} \delta\beta_1 \\ \delta\beta_2 \\ \delta\beta_3 \end{Bmatrix}_{\delta v=1} = \begin{Bmatrix} -\frac{1}{\sqrt{2}} \\ -1 \\ -\frac{1}{\sqrt{2}} \end{Bmatrix} \tag{12-77b}$$

For any bar, bar 1 for example, the virtual strain energy can be calculated as

$$\delta U_1 = \int \sigma_1 \delta \varepsilon_1 A_1 d\ell = F_1 \delta \beta_1$$

since

$$F_1 = \sigma_1 A_1 \quad \text{and} \quad \delta\beta_1 = \delta\varepsilon_1 \ell$$

The virtual strain energy stored in all three bars can be written as

$$\delta U = F_1 \delta\beta_1 + F_2 \delta\beta_2 + F_3 \delta\beta_3 \tag{12-78}$$

Consider the virtual displacement ($\delta u = 1$) along the x-direction. For this direction,

$$P_r = P_x$$

$$\int \sigma \delta\varepsilon dv = \frac{F_1}{\sqrt{2}} - \frac{F_3}{\sqrt{2}}$$

Substitution into Eq. (12-76) yields the equilibrium equation along the x-direction

$$\frac{F_1}{\sqrt{2}} = \frac{F_3}{\sqrt{2}} = P_x$$

Likewise, the equilibrium equation is obtained in the y-direction as

$$-\frac{F_1}{\sqrt{2}} - F_2 - \frac{F_3}{\sqrt{2}} = P_y$$

The two equilibrium equations in matrix notation can be written as

$$\begin{bmatrix} \frac{1}{\sqrt{2}} & 0 & -\frac{1}{\sqrt{2}} \\ -\frac{1}{\sqrt{2}} & -1 & -\frac{1}{\sqrt{2}} \end{bmatrix} \begin{Bmatrix} F_1 \\ F_2 \\ F_3 \end{Bmatrix} = \begin{Bmatrix} P_x \\ P_y \end{Bmatrix} \tag{12-79}$$

The equilibrium equations given by Eq. (12-79) are identical to Eq. (12-38c).

Theorem 5—Principle of Complementary Virtual Work

The principle of complementary virtual work provides the strain displacement relations and the compatibility conditions for indeterminate structures. It is formally stated as

For the structure in equilibrium, the sum of the complementary virtual work done in arbitrary virtual force variation satisfying equilibrium and force boundary conditions is zero.

Mathematically, the theorem can be stated as

$$\delta_p(\overline{U} - \overline{W}_p) = 0 \tag{12-80a}$$

or

$$\delta_p \overline{U} = \delta_p \overline{W}_p \tag{12-80b}$$

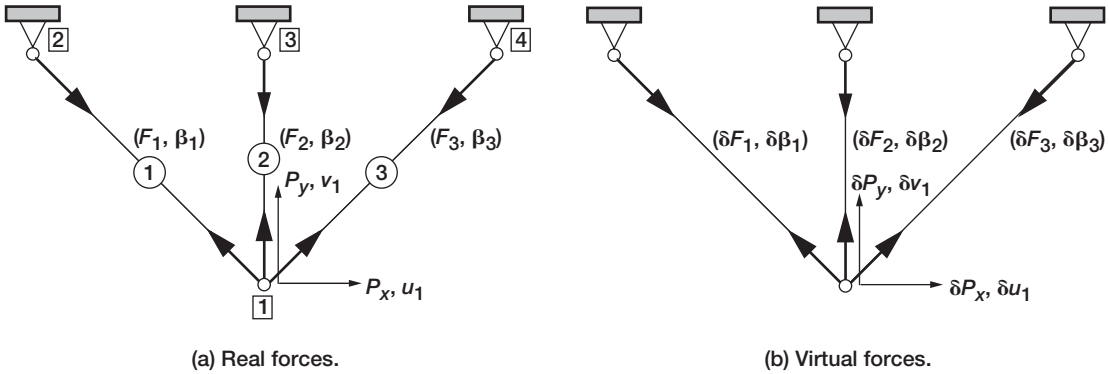

FIGURE 12-11 *Three-bar truss subjected to real and virtual forces.*

The symbol δ_p represents variation with respect to equilibrating forces. $\overline{U}$ and $\overline{W}_p$ are the complementary strain energy and complementary work, respectively.

For illustration purposes, consider the three-bar truss shown in Fig. 12-11. The truss under real loads (P_x, P_y) induces the following responses (see Fig. 12-11*a*):

Bar forces $(F_1, F_2, F_3)_1$ or $\{F\}^T = <F_1 F_2 F_3>$
Bar deformations $(\beta_1, \beta_2, \beta_3)$ or $\{\beta\}^T = <\beta_1 \beta_2 \beta_3>$
Nodal displacements (u_1, v_1) or $\{u\}^T = <u_1 u_2>$

The responses induced under virtual loads ($\delta P_x, \delta P_y$) are as follows (see Fig. 12-11*b*):

Virtual bar forces $(\delta F_1, \delta F_2, \delta F_3)_1$ or $\{\delta F\}^T = <\delta F_1 \delta F_2 \delta F_3>$
Virtual bar deformations $(\delta\beta_1, \delta\beta_2, \delta\beta_3)$ or $\{\delta\beta\}^T = <\delta\beta_1 \delta\beta_2 \delta\beta_3>$
Virtual nodal displacements $(\delta u_1, \delta v_1)$ or $\{\delta u\}^T = <\delta u_1 \delta u_2>$

The complementary virtual strain energy stored in a truss bar can be written as

$$\delta_F \overline{U} = \int \varepsilon \delta\sigma A\ell = \frac{\beta}{\ell}\frac{\delta F}{A} \cdot A\ell = \beta \delta F$$

The complementary virtual strain energy stored in the truss $\delta_p \overline{U}$ is

$$\delta_p \overline{U} = \beta_1 \delta F_1 + \beta_2 \delta F_2 + \beta_3 \delta F_3 = \{\delta F\}^T \{\delta\beta\} \tag{12-81}$$

The complementary virtual work can be written as

$$\delta \overline{W}_p = u_1 \delta P_x + u_2 \delta P_y = \{\delta P\}^T \{u\} \tag{12-82}$$

The theorem $\delta_p \overline{U} = \delta \overline{W}_p$ yields

$$\{\delta F\}^T \{\beta\} = \{\delta P\}^T \{u\} \tag{12-83}$$

The virtual load $\{\delta P\}$ and virtual bar forces $\{\delta F\}$ must satisfy the equilibrium equation, which can be written by inspection of Eq. (12-54d)

$$\frac{1}{\sqrt{2}}\delta F_1 - \frac{1}{\sqrt{2}}\delta F_3 = \delta P_x \tag{12-84a}$$

$$-\frac{1}{\sqrt{2}}\delta F_1 - \delta F_2 - \frac{1}{\sqrt{2}}\delta F_3 = \delta P_y \tag{12-84b}$$

The EE in matrix notation can be written as

$$\begin{bmatrix} \frac{1}{\sqrt{2}} & 0 & -\frac{1}{\sqrt{2}} \\ -\frac{1}{\sqrt{2}} & -1 & -\frac{1}{\sqrt{2}} \end{bmatrix} \begin{Bmatrix} \delta F_1 \\ \delta F_2 \\ \delta F_3 \end{Bmatrix} = \begin{Bmatrix} \delta P_1 \\ \delta P_2 \end{Bmatrix} \tag{12-84c}$$

The EE in matrix notation can be written as

$$[B]\{\delta F\} = \{\delta P\} \tag{12-85}$$

The 2×3 equilibrium matrix $[B]$ is the coefficient matrix in Eq. (12-84c).

Elimination of the virtual load $\{\delta P\}$ between Eqs. (12-83) and (12-85) yields

$$\{\delta F\}^T \{\beta\} = \{\delta F\}^T [B]^T \{u\} \tag{12-86a}$$

or

$$\{\delta F\}^T \left(\{\beta\}^T - [B]^T \{u\}\right) = 0 \tag{12-86b}$$

The virtual bar force $\{\delta F\}$ is not a null vector; therefore, its coefficient must be set to zero to satisfy Eq. (12-86b), or

$$\{\beta\}^T = [B]^T \{u\} \tag{12-87}$$

Equation (12-87) represents the deformation displacement relations. It can be written as

$$\beta_1 = \frac{u_1 - v_1}{\sqrt{2}} \tag{12-88a}$$

$$\beta_2 = -v_1 \tag{12-88b}$$

$$\beta_3 = \frac{-(u_1 + v_1)}{\sqrt{2}} \tag{12-88c}$$

The DDR given by Eq. (12-88) is similar to Eq. (12-35), except for replacing actual displacements (u_1 and v_1) in place of virtual quantities (δu and δv). The DDR, earlier obtained from geometrical considerations, is now obtained from the principle of complementary virtual work.

In the DDR given by Eq. (12-88*a*), the three deformations (β_1, β_2, β_3) are expressed in terms of two displacements (u_1, v_1). The three deformations are not independent. The single constraint in the three deformations is obtained by eliminating the two displacements from the three DDR given by Eq. (12-88). This constraint can be written as

$$\beta_1 - \sqrt{2}\beta_2 + \beta_3 = 0 \tag{12-89a}$$

In matrix notation it is

$$\begin{bmatrix} 1 & -\sqrt{2} & 1 \end{bmatrix} \begin{Bmatrix} \beta_1 \\ \beta_2 \\ \beta_3 \end{Bmatrix} = 0 \tag{12-89b}$$

or

$$[C]\{\beta\} = \{0\} \tag{12-90}$$

where

$$[C] = \begin{bmatrix} 1 & -\sqrt{2} & 1 \end{bmatrix}$$

Equation (12-90) represents the compatibility condition of the three-bar truss. The matrix $[C]$ is the compatibility matrix with $r = 1$ row and $n = 3$ columns. For a general structure, n represents the number of unknown forces. For the three-bar truss, the three bar forces (F_1, F_2, F_3) are the unknowns, or $n = 3$. The displacement unknowns are represented by m. The three-bar truss has two unknown displacements (u_1, v_1), or $m = 2$. The number of compatibility conditions is represented by r, which is the difference between the force unknowns n and displacement unknowns m:

$$r = n - m \tag{12-91}$$

In the redundant force method, r represents the number of redundant forces or the number of compatibility conditions.

Concept of redundant forces: The specialization of the principle of complementary virtual work leads to the concept of redundant forces. The virtual load $\{\delta P\}$ is assumed to be zero, or $\delta P_x = \delta P_y = 0$. Equation (12-85) yields

$$[B]\{\delta F\} = \{0\} \tag{12-92}$$

The homogeneous Eq. (12-92) can be solved provided the value for one of the three virtual forces (δF_1, δF_2, δF_3) is assumed. Traditionally, one of the three forces is set to a

redundant force R or unity. Here, set $\delta F_1 = R$, and it can be set to unity as and when required ($\delta F_1 = R = 1$). The equilibrium equations can be written in terms of R from [Eqs. (12-84a) and (12-84b)]

$$\frac{R}{\sqrt{2}} - \frac{1}{\sqrt{2}}\delta F_3 = 0 \tag{12-93a}$$

$$-\frac{R}{\sqrt{2}} - \delta F_2 - \frac{1}{\sqrt{2}}\delta F_3 = 0 \tag{12-93b}$$

$$-\frac{R}{\sqrt{2}}\delta F_3 = -\frac{R}{\sqrt{2}} \tag{12-93c}$$

or

$$-\delta F_2 - \frac{1}{\sqrt{2}}\delta F_3 = \frac{R}{\sqrt{2}} \tag{12-93d}$$

Solution of Eq. (12-93) yields

$$\delta F_1 = R \tag{12-94a}$$

$$\delta F_2 = -\sqrt{2}R \tag{12-94b}$$

$$\delta F_3 = R \tag{12-94c}$$

The virtual bar forces for unit value of ($R = 1$) are

$$\{\delta F\} = \begin{Bmatrix} 1 \\ -\sqrt{2} \\ 1 \end{Bmatrix} \tag{12-95a}$$

For $\delta F_1 = R$ instead of unity ($\delta F = 1$), the virtual forces can be written as

$$\{\delta F\} = \begin{bmatrix} 1 \\ -\sqrt{2} \\ 1 \end{bmatrix}\{R\} \tag{12-95b}$$

or

$$\{\delta F\} = [B_1]\{R\} \tag{12-95c}$$

where

$$[B_1] = \begin{bmatrix} 1 \\ -\sqrt{2} \\ 1 \end{bmatrix}$$

In Eq. (12-95c), the coefficient matrix $[B_1]$ of dimension $(n \times r)$ is called the self-stress matrix and $\{R\}$ is referred to as the r component, redundant force vector, here $n = 3$ and $r = 1$. The self-stress matrix $[B_1]$ is the transpose of the compatibility matrix $[C]$ defined in Eq. (12-90), ($[B_1] = [C]^T$). The concepts of the redundant force and the self-stress matrix are used in the classical redundant-based method of forces.

Classical derivation of the self-stress matrix: Traditionally, the self-stress matrix is derived through an application of three concepts: "cut," redundant force, and auxiliary determinate structure. These concepts are illustrated considering the three-bar truss shown in Fig. 12-12 as an example. It is a single-degree redundant structure ($r = 1$, $n = 3$, and $m = 2$). Identify any one ($r = 1$) bar for example bar 1. Bar 1 of the intermediate truss in Fig.12-12a is "cut" to obtain the auxiliary determinate truss shown in Fig. 12-12b. Bar 1 is called the redundant member, and the actual force in this bar is referred to as the redundant force R. The auxiliary determinate structure is obtained by removing the redundant member. The auxiliary structure must be a stable determinate structure. The auxiliary truss with two, bars 2 and 3 satisfy this criteria ($n = m = 2$). The auxiliary determinate truss shown in Fig. 12-12b is loaded by unit force instead of the actual bar force ($F_1 = f_1 = 1$). The determinate truss is solved to obtain the bar forces, referred to as (f_2 and f_3) for bars 2 and 3, respectively.

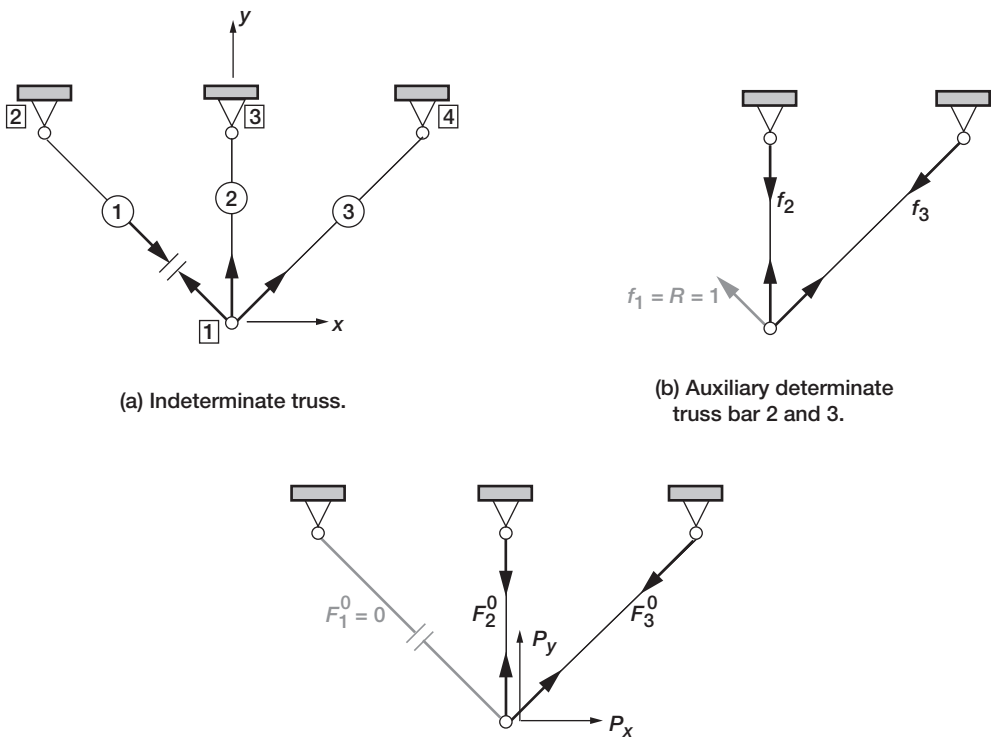

FIGURE 12-12 *Self-stress matrix for the three-bar truss.*

Here external load is set to zero ($P_x = P_y = 0$) and ($f_1 = 1$) is considered as the external load.

The equilibrium along the x- and y-coordinate directions yields

$$-\frac{1}{\sqrt{2}} + \frac{f_3}{\sqrt{2}} = 0 \tag{12-96a}$$

$$\frac{1}{\sqrt{2}} + f_2 + \frac{f_3}{\sqrt{2}} = 0 \tag{12-96b}$$

The solution to Eq. (12-96) yields

$$f_1 = 1 \quad f_2 = -\sqrt{2} \quad f_3 = 1$$

or

$$\{f\}_{F_3=R} = \begin{bmatrix} 1 \\ -\sqrt{2} \\ 1 \end{bmatrix} \{R\} = [B_1]\{R\} \tag{12-97}$$

The definition of the self-stress matrix $[B_1]$ in Eq. (12-97) is identical to that given by Eq. (12-95).

Theorem 6—Principle of Complementary Energy

For an indeterminate structure, the compatibility conditions in terms of redundant forces can be derived from an application of the complementary energy theorem, which can be stated as

Among all force states that satisfy the equilibrium conditions and the prescribed mechanical boundary conditions, the state of stress that satisfies the compatibility conditions and geometrical boundary conditions makes the complementary energy assume a stationary value.

Mathematically, the theorem is stated as

$$\delta_R \pi_c = \delta_R \left(\overline{U} - \overline{W}_p\right) = 0$$

where π_C is the complementary energy functional and δ_R is the variational symbol and represents variation with respect to the redundant R.

The theorem is illustrated by considering the three-bar truss as an example. The theorem utilizes the concepts of auxiliary determinate structure and the redundant force shown in Fig. 12-12. The forces (F_2^0 and F_3^0) in the auxiliary structure subjected to applied loads (P_x, P_y) can be determined from equilibrium considerations (see Fig. 12-12c). Bar 1 is the redundant member and it is not part of the auxiliary or the basis structure, and the force is set to zero ($F_1^0 = 0$). The EE along the x- and y-directions yield

$$\frac{F_3^0}{\sqrt{2}} + P_x = 0 \tag{12-98a}$$

$$F_2^0 + \frac{F_3^0}{\sqrt{2}} + P_y = 0 \tag{12-98b}$$

Forces with superscript zero representing the determinate solution is obtained as

$$F_1^0 = 0 \tag{12-99a}$$

$$F_2^0 = P_x - P_y \tag{12-99b}$$

$$F_3^0 = -P_x\sqrt{2} \tag{12-99c}$$

The real forces in the three-bar truss are obtained by adding redundant effect in Eq. (12-95) to Eq. (12-99) as

$$F_1 = F_1^0 + \delta F_1 = R \tag{12-100a}$$

$$F_2 = F_2^0 + \delta F_2 = P_x - P_y - \sqrt{2}R \tag{12-100b}$$

$$F_3 = F_3^0 + \delta F_3 = -P_x\sqrt{2} + R \tag{12-100c}$$

The forces defined in Eq. (12-100) have the following attributes

1. The forces (F) satisfy the equilibrium condition because determinate forces F^0 and redundant forces δF have been obtained as the solution to such equations.
2. The forces (F) satisfy the boundary conditions because these are applied while writing the equilibrium equations. These are referred to as the mechanical boundary conditions.

The forces given by Eq. (12-100) satisfy both attributes and represent an admissible force state. By specifying different values for the redundant force R, different admissible force states can be obtained. For example, the following three force states calculated for $R = 5$, $R = 100$, and $R = 200$ represent admissible force states.

$$\begin{Bmatrix} F_1 \\ F_2 \\ F_3 \end{Bmatrix}_{R=5} = \begin{Bmatrix} 5 \\ P_x - P_y - 5\sqrt{2} \\ -P_x\sqrt{2} + 5 \end{Bmatrix}$$

$$\begin{Bmatrix} F_1 \\ F_2 \\ F_3 \end{Bmatrix}_{R=100} = \begin{Bmatrix} 100 \\ P_x - P_y - 100\sqrt{2} \\ -P_x\sqrt{2} + 100 \end{Bmatrix} \tag{12-101}$$

$$\begin{Bmatrix} F_1 \\ F_2 \\ F_3 \end{Bmatrix}_{R=200} = \begin{Bmatrix} 200 \\ P_x - P_y - 200\sqrt{2} \\ -P_x\sqrt{2} + 200 \end{Bmatrix}$$

The question is, "What is the correct value of the redundant R?" The theorem of complementary energy addresses this equation. The stationary condition of the complementary energy yields the correct value of the redundant force R. The complementary energy

function π_c required in the theorem is obtained for the three-bar truss from Eq. (12-10). For a bar of the truss, the complementary energy can be written as

$$\overline{U}_1 = \int_0^{\ell\sqrt{2}} \overline{U}_d A d\ell = \frac{1}{2E}\int_0^{\ell\sqrt{2}} \sigma_1^2 A d\ell = \frac{1}{2E}\int_0^{\ell\sqrt{2}} \left(\frac{F}{A}\right)_1^2 A d\ell = \frac{1}{2}\frac{F_1^2}{A_1 E}\ell\sqrt{2} \tag{12-102}$$

The complementary energy for the truss is obtained by adding the energies for the three bars as

$$\overline{U} = \overline{U}_1 + \overline{U}_2 + \overline{U}_3 \tag{12-103a}$$

$$\overline{U} = \frac{\ell}{2E}\left(\frac{\sqrt{2}}{A_1}F_1^2 + \frac{F_2^2}{A_2} + \frac{\sqrt{2}}{A_3}F_3^2\right) \tag{12-103b}$$

The next step is the substitute for forces (F_1, F_2, F_3) defined in Eq. (12-100) into the complementary energy given by Eq. (12-104). This cumbersome step is not essential, and it is avoided for the time being. The reader must remember that the redundant R is the only free variable in the complementary energy. The complementary virtual work for simple strength of materials application can be set to zero. The functional π_c simplifies to

$$\pi_c = \overline{U} \tag{12-103c}$$

According to the theorem, the correct value of the redundant R will make the complementary function stationary. We will follow the reverse; that is, the stationary condition yields the compatibility condition, which can be mathematically stated as

$$\delta_R(\pi_c) = 0 = \frac{\partial \pi_c}{\partial R} = 0 \tag{12-104}$$

From Eqs. (12-103) and (12-104), we obtain

$$\frac{\partial \pi_c}{\partial R} = \frac{\ell}{2E}\left(\frac{\sqrt{2}}{A_1}\left(\frac{\partial}{\partial R}F_1^2\right) + \frac{1}{A_2}\left(\frac{\partial}{\partial R}F_2^2\right) + \frac{\sqrt{2}}{A_3}\left(\frac{\partial}{\partial R}F_3^2\right)\right) = 0 \tag{12-105}$$

To make the calculations simpler, let us assume that the loads are $P_x = 50$ kip and $P_y = 100$ kip and the bar areas are $A_1 = 1.0$ in.^{2}, $A_2 = 1.0$ in.^{2}, $A_3 = 2.0$ in.^{2}, and $\ell = 100$ in. It is not necessary to assume a value of the Young's modulus E because Eq. (12-105) is homogeneous.

$$F_1^2 = R^2 \qquad \text{or} \qquad \frac{\partial F_1^2}{\partial R} = 2R \tag{12-106a}$$

$$F_2^2 = \left(P_x - P_y - \sqrt{2}R\right)^2 \qquad \text{or} \qquad \frac{\partial F_2^2}{\partial R} = -2\sqrt{2}\left(P_x - P_y - \sqrt{2}R\right) \tag{12-106b}$$

$$F_3^2 = \left(-P_x\sqrt{2} + R\right)^2 \qquad \text{or} \qquad \frac{\partial^2 F_3^2}{\partial R} = 2\left(-P_x\sqrt{2} + R\right) \tag{12-106c}$$

Substitution of Eq. (12-106) into Eq. (12-105) for the truss parameters yields the compatibility condition as

$$\left(4+3\sqrt{2}\right)R = 100\left(1-\sqrt{2}\right)$$

$$R = \frac{100\left(1-\sqrt{2}\right)}{4+3\sqrt{2}} = -5.025\,\text{kip} \tag{12-107}$$

Substitution of the value of the redundant in Eq. (12-100) yields the solution for forces:

$$\begin{aligned} F_1 &= -5.025\,\text{kip} \\ F_2 &= -42.893\,\text{kip} \\ F_3 &= -75.736\,\text{kip} \end{aligned} \tag{12-108}$$

The principle of complementary energy yields the values of the redundant forces. The solution is used to calculate the internal forces in an indeterminate structure.

Theorem 7—Castigliano's Second Theorem

Castigliano's second theorem is formulated in terms of the complementary strain energy ($\overline{U}$) and its derivative with respect to the force variable. This theorem can be used to calculate the displacement in a structure. It is stated as

For an elastic structure in equilibrium under thermal and mechanical loads, the displacement component X_r at the point of the application of load P_r in the direction of P_r is equal to the derivative of the complementary strain energy with respect to the load.

The theorem can be stated mathematically as

$$\frac{\partial \overline{U}}{\partial P_r} = X_r \tag{12-109}$$

Consider the three-bar truss subjected to the loads (P_x, P_y) shown in Fig. 12-13. The truss is made of steel with a Young's modulus E of 30×10^3 ksi, bar areas of $A_1 = A_2 = 1.0\,\text{in.}^2$ and $A_3 = 2.0\,\text{in.}^2$, and a length ℓ of 100 in. The displacements u_1 and v_1 along the loads (P_x, P_y) can be calculated through an application of the second theorem.

The complementary energy of the truss can be written as (see Eq. 12-103*b*)

$$\overline{U} = \frac{\ell}{2E}\left(\frac{\sqrt{2}F_1^2}{A_1} + \frac{F_2^2}{A_2} + \frac{\sqrt{2}F_3^2}{A_3}\right) \tag{12-110a}$$

The complementary energy is specialized for the problem parameters to obtain a simplified expression.

$$\overline{U} = \frac{50}{E}\left(\sqrt{2}F_1^2 + F_2^2 + \frac{F_3^2}{\sqrt{2}}\right) \tag{12-110b}$$

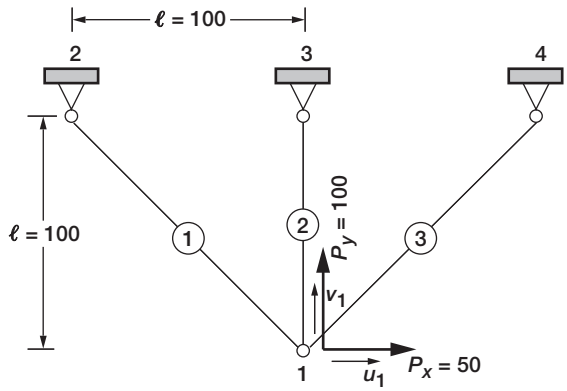

FIGURE 12-13 *Three-bar truss under mechanical load.*

According to the second theorem

$$\frac{\partial \overline{U}}{\partial P_x} = u_1 \tag{12-111a}$$

$$\frac{\partial \overline{U}}{\partial P_y} = v_1 \tag{12-111b}$$

Because the complementary energy is expressed in forces (F_1, F_2, F_3) but not in terms of loads (P_x, P_y), we use the following chain rule of differentiation to back-calculate the derivatives.

$$u_1 = \frac{\partial \overline{U}}{\partial P_x} = \frac{\partial \overline{U}}{\partial F_1}\frac{\partial F_1}{\partial P_x} + \frac{\partial \overline{U}}{\partial F_2}\frac{\partial F_2}{\partial P_x} + \frac{\partial \overline{U}}{\partial F_3}\frac{\partial F_3}{\partial P_x} \tag{12-112a}$$

$$v_1 = \frac{\partial \overline{U}}{\partial P_y} = \frac{\partial \overline{U}}{\partial F_1}\frac{\partial F_1}{\partial P_y} + \frac{\partial \overline{U}}{\partial F_2}\frac{\partial F_2}{\partial P_y} + \frac{\partial \overline{U}}{\partial F_3}\frac{\partial F_3}{\partial P_y} \tag{12-112b}$$

The partial derivatives with respect to bar forces ($\frac{\partial \overline{U}}{\partial F_i}$, $i = 1, 2, 3$) are obtained from Eq. (12-110*b*).

$$\frac{\partial \overline{U}}{\partial F_1} = \frac{100\sqrt{2}F_1}{E} \tag{12-113a}$$

$$\frac{\partial \overline{U}}{\partial F_2} = \frac{100F_2}{E} \tag{12-113b}$$

$$\frac{\partial \overline{U}}{\partial F_3} = \frac{100F_3}{E\sqrt{2}} \tag{12-113c}$$

The calculation of the partial derivatives of force $F_i (i = 1, 2, 3)$ with respect to loads (P_x, P_y) is difficult because due to indeterminacy it is difficult to explicitly express the bar forces in terms of loads. The situation becomes manageable because the auxiliary determinate structure can be employed to calculate $\partial F/\partial P$. The reader should accept the interchangeability of indeterminate and basis structure and proceed. The underlying proof is avoided in this elementary text. In other words, after the forces have been calculated, a determinate auxiliary structure can be used to calculate displacement for static load. The assumption is not valid for dynamic load.

The derivatives with respect to load are calculated from Eq. (12-99) as

$$\frac{\partial F_1}{\partial P_x} = \frac{\partial F_1^0}{\partial P_x} = 0 \qquad \text{and} \qquad \frac{\partial F_1}{\partial P_y} = \frac{\partial F_1^0}{\partial P_y} = 0 \tag{12-114a}$$

$$\frac{\partial F_2}{\partial P_x} = \frac{\partial F_2^0}{\partial P_x} = \frac{\partial}{\partial P_x}\left(P_x - P_y\right) = 1 \quad \text{and} \quad \frac{\partial F_2}{\partial P_y} = \frac{\partial F_2^0}{\partial P_y} = -1 \tag{12-114b}$$

$$\frac{\partial F_3}{\partial P_x} = \frac{\partial F_3^0}{\partial P_x} = -\sqrt{2} \qquad \text{and} \qquad \frac{\partial F_3}{\partial P_y} = \frac{\partial F_3^0}{\partial P_y} = 0 \tag{12-114c}$$

Substitution of Eqs. (12-113) and (12-114) into Eq. (12-112) yields the displacements

$$u_1 = 0 + \frac{100F_2}{E} \times 1 + \frac{100F_3}{\sqrt{2}E}\left(-\sqrt{2}\right) = \frac{100}{E}(F_2 - F_3)$$

Substitution for $F_2 = -42.893$ and $F_3 = -74.736$ from Eq. (12-108) yields

$$u_1 = -\frac{100}{E}(42.893 - 75.736) = 0.110\,\text{in.} \tag{12-115a}$$

Likewise,

$$v_1 = 0 + \frac{100F_2}{E}(-1) + 0 = 0.143\,\text{in.} \tag{12-115b}$$

An application of Castigliano's second theorem yields the displacements in an indeterminate structure.

Theorem 8—Unit Load Theorem

The principle of complementary virtual work can be specialized to obtain the unit load theorem. An application of this theorem yields the displacement. Let the strain state in an elastic structure in equilibrium under external load be represented by $\{\varepsilon\}$. If a virtual force δP_r is applied at the point of the application and in the direction of displacement X_r, so that virtual stress $\{\delta\sigma_y\}$ is produced in the structure, then the complementary virtual strain energy can be written as

$$\delta\overline{U} = \int_v \varepsilon d\sigma_r dv \tag{12-116a}$$

The complementary virtual work done can be written as

$$\delta\overline{W}_p = X_r \delta P_r \tag{12-116b}$$

According to the principle of complementary virtual work,

$$\delta\overline{U} = \delta\overline{W}_p \tag{12-117a}$$

or

$$X_r \delta P_r = \int_v \varepsilon d\sigma_r dv \tag{12-117b}$$

If δP_r is set to unity ($\delta P_r = 1$) and the corresponding stress state is designated as $\overline{\sigma}_r$, then the displacement (X_r) can be obtained as

$$X_r = \int_v \varepsilon \delta\overline{\sigma}_r dV \tag{12-118}$$

The theorem is thus named because a unit load, or more precisely a unit virtual load, is applied. The unit load theorem is illustrated by considering the three-bar truss as an example. Let us calculate the displacement v_1 for the truss shown in Fig. 12-13. The integral given by Eq. (12-118) can be specialized for the truss bars. Contribution (q_1) from bar 1 is obtained as

$$q_1 = \int_V \varepsilon \delta\overline{\sigma}_r dV = \int_0^{\ell\sqrt{2}} \left(\frac{\beta_1}{\ell\sqrt{2}}\right)\left(\frac{\delta F_r}{A}\right)_1 A_1 d\ell = \frac{1}{\ell\sqrt{2}}\int_0^{\ell\sqrt{2}} \beta_1 (\delta F_r)_1 d\ell = \beta_1 (\delta F_r)_1 \tag{12-119a}$$

Likewise, q_2 and q_3 for the second and third bar can be obtained.

$$q_2 = \beta_2 (\delta F_r)_2 \tag{12-119b}$$

$$q_3 = \beta_3 (\delta F_r)_3 \tag{12-119c}$$

Deformations are obtained as

$$\beta_1 = \frac{F_1 \ell_1}{A_1 E} = -\frac{5.025 \times 100\sqrt{2}}{1 \times 30 \times 10^3} = -0.0237 \tag{12-120a}$$

$$\beta_2 = \frac{F_2 \ell_2}{A_2 E} = -\frac{42.892 \times 100}{30 \times 10^3} = -0.1430 \tag{12-120b}$$

$$\beta_3 = \frac{F_3 \ell_3}{A_3 E} = -\frac{75.736 \times 100\sqrt{2}}{2 \times 30 \times 10^3} = -0.1785 \tag{12-120c}$$

The virtual bar forces (δF_{r1}, δF_{r2}, δF_{r3}) have to be calculated for a unit value of the load ($P_x = 1$). Again, for simplicity, for this calculation the actual structure can be replaced by the auxiliary determinate structure. Equation (12-99) can be specialized for v displacement ($P_x = 0$, $P_y = 1$) to obtain the virtual bar forces:

$$\delta F_1 = \delta F_1^0 = 0 \tag{12-121a}$$

$$\delta F_2 = \delta F_2^0 = -1 \tag{12-121b}$$

$$\delta F_3 = \delta F_3^0 = 0 \tag{12-121c}$$

$$v_1 = q_1 + q_2 + q_3 = (0.0237)0 + (0.1430)1 + (0.1785)0 = 0.143\,\text{in.} \tag{12-122a}$$

Likewise, the displacement u_1 can be calculated by specializing Eq. (12-100) for $P_x = 1$ and $P_y = 0$.

$$\delta F_1 = \delta F_1^0 = 0 \tag{12-122b}$$

$$\delta F_2 = 1 \tag{12-122c}$$

$$\delta F_3 = -\sqrt{2} \tag{12-122d}$$

$$u_1 = q_1 + q_2 + q_3 = 0 - 0.1430 \times 1 + 0.1785\sqrt{2} = 0.110\,\text{in.} \tag{12-122e}$$

The application of the unit load theorem produced the values of the displacements (u_1, v_1), which are equal to that calculated from Castigliano's second theorem in Eq. (12-115).

Theorem 9—Betti's Theorem

Consider a stable elastic structure shown in Fig. 12-14. Let it be subjected to load P^{I} at location A, along a direction d_{A} inducing displacements X^{I} at location B, along a direction d_{B}

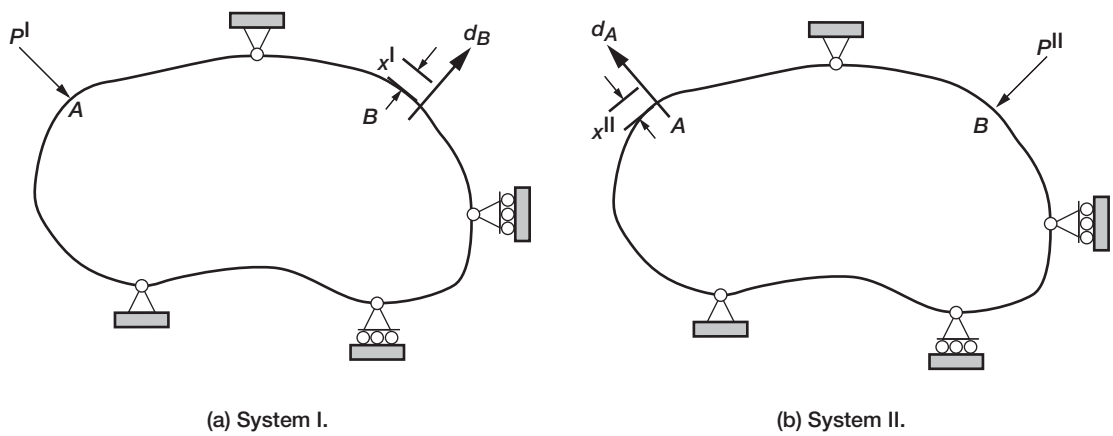

FIGURE 12-14 *Illustration for Betti's theorem.*

as shown in Fig. 12-14*a*, and designate it as system I. Consider system II in Fig. 12-14*b*, wherein the structure is subjected to load P^{II} at location B along the displacement direction $X^{\mathrm{I}}(d_B)$ and inducing displacement X^{II} at location A along direction $X^{\mathrm{I}}(d_A)$.

For system I, the load displacement relationship can be written as

$$K_{ab}X^{\mathrm{I}} = P^{\mathrm{I}} \tag{12-123a}$$

The stiffness coefficient K_{ab} represents the force produced at A along the load P^{I} due to a unit displacement applied at B along load P^{II}.

Likewise, the stiffness equation for system II can be written as

$$K_{ba}X^{\mathrm{II}} = P^{\mathrm{II}} \tag{12-123b}$$

The stiffness coefficient K_{ba} represents the force produced at B along direction P^{II} due to a unit displacement applied at A along load P^{I}. The statement for Betti's theorem follows

For an elastic body in equilibrium, the work done by the load P^{I} of system I over displacement X^{II} of system II is equal to the work done by the load P^{II} of system II over displacement X^{I} of system I.

$$P^{\mathrm{I}}X^{\mathrm{II}} = P^{\mathrm{II}}X^{\mathrm{I}} \tag{12-124}$$

Loads P^{I} and P^{II} induce displacements X^{I} and X^{II}, respectively, as shown in Fig. 12-14*a* and *b*.

Betti's theorem is illustrated considering the three-bar truss as an example.

Consider system I (see Fig. 12-15a): For load P_x along the x-direction, displacement v_1 is measured along the y-direction. For $P^{\mathrm{I}} = P_x = 50\,\mathrm{kip}$, the displacement induced is $X^{\mathrm{I}} = v_1 = -0.0285\,\mathrm{in.}$

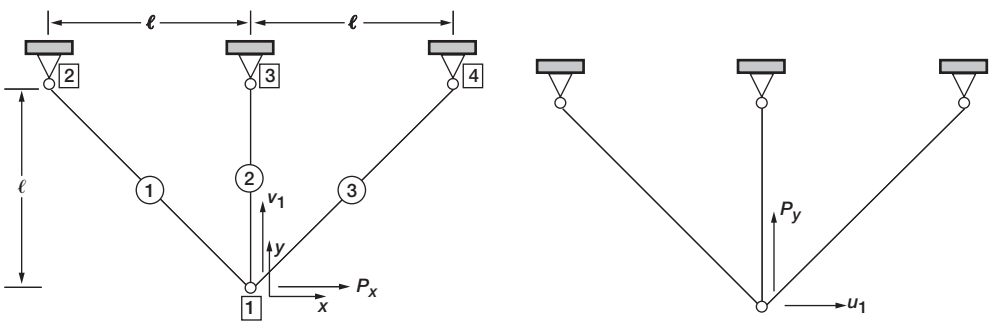

(a) System I. $P^{\mathrm{I}} = P_x = 50$ kips; $x^{\mathrm{I}} = v_1 = -0.0285$ in. (If $P^{\mathrm{I}} = 1$, $x^{\mathrm{I}} = -0.57\times10^{-3}$ in.)

(b) System II. $P^{\mathrm{II}} = P_y = 100$ kips; $x^{\mathrm{II}} = -0.057$ in. (If $P^{\mathrm{II}} = 1$, $x^{\mathrm{II}} = -0.57\times10^{-3}$ in.)

FIGURE 12-15 *Illustration for Betti's and Maxwell's theorems. Bar areas,* $A_1 = A_2 = 1.0\,\mathrm{in.}^2$ *and* $A_3 = 2.0\,\mathrm{in.}^2$*; material, steel; Young's modulus,* $E = 30 \times 10^3$ ksi.

System II (see Fig. 12-15b): For load P^{II} along direction $X^{\mathrm{I}} = v_1$, the displacement is measured along the direction $P^{\mathrm{I}} = u_1$. For $P^{\mathrm{II}} = P_y = 100\,\mathrm{kip}$, the induced displacement $X^{\mathrm{II}} = u_1 = -0.057\,\mathrm{in.}$

$$P^{\mathrm{I}}X^{\mathrm{II}} = 50(-0.057) = -2.85\,\mathrm{in.\text{-}k} \tag{12-125a}$$

$$P^{\mathrm{II}}X^{\mathrm{I}} = 100(-0.0285) = -2.85\,\mathrm{in.\text{-}k} \tag{12-125b}$$

$$P^{\mathrm{I}}X^{\mathrm{II}} = P^{\mathrm{II}}X^{\mathrm{I}} = -2.85\,\mathrm{in.\text{-}k} \tag{12-125c}$$

Betti's theorem is proved.

The stiffness coefficients K_{ab} can be calculated: For system I, the index ($a = 1$) represents the direction of the load P_x; the index ($b = 2$) indicates the direction of the displacement v_1

$$K_{12}\left(X^{\mathrm{I}}\right) = P^{\mathrm{I}} \tag{12-126a}$$

$$K_{12} = \frac{P^{\mathrm{I}}}{X^{\mathrm{I}}} = \frac{50\,\mathrm{kips}}{-0.0285\,\mathrm{in.}} = -1754.4\,\mathrm{in.\text{-}k} \tag{12-126b}$$

The stiffness coefficient K_{12} is negative because the positive load P^{I} produces a negative displacement X^{I}. Likewise, for system II, the stiffness equation can be written as

$$K_{21} = \frac{P^{\mathrm{II}}}{X^{\mathrm{II}}} = \frac{100\,\mathrm{kips}}{-0.057\,\mathrm{in.}} = -1754.4\,\mathrm{in.\text{-}k} \tag{12-126c}$$

From Eqs. (12-126*b*) and (12-126*c*), the stiffness coefficients are symmetrical.

$$K_{21} = K_{12} = \frac{P^{\mathrm{I}}}{X^{\mathrm{I}}} = \frac{P^{\mathrm{II}}}{X^{\mathrm{II}}} \tag{12-126d}$$

Betti's theorem can be used to calculate displacement for system II using the results of system I.

Equation (12-126*d*) can be rewritten as

$$X^{\mathrm{II}} = \frac{P^{\mathrm{II}}}{K_{12}} = \left(\frac{P^{\mathrm{II}}}{P^{\mathrm{I}}}\right)X^{\mathrm{I}} \tag{12-127a}$$

$$P^{\mathrm{II}} = (K_{12})X^{\mathrm{II}} = P^{\mathrm{I}}\left(\frac{X^{\mathrm{II}}}{X^{\mathrm{I}}}\right) \tag{12-127b}$$

Displacement $u_1 = X^{\mathrm{II}}$ can be calculated for any value of load $P_y = P^{\mathrm{II}}$. For example, displacement u_1 for load $P_y = 25 = P^{\mathrm{II}}$ kip is obtained as

$$u_1 = X^{\mathrm{II}} = \left(\frac{P^{\mathrm{II}}}{P^{\mathrm{I}}}\right)X^{\mathrm{I}} = \left(\frac{25}{50}\right)(-0.0285) = -0.1425\,\mathrm{in.} \tag{12-128a}$$

The solution to the inverse problem can also be generated from Betti's theorem. For example, what value of $P_y = P^{\text{II}}$ will induce a displacement of $u_1 = X^{\text{II}} = 0.25$ in. From Eq. (12-127*b*),

$$P_y = P^{\text{II}} = 50\left(\frac{0.25}{-0.0285}\right) = -438.6\,\text{kips} \tag{12-128b}$$

A load of 438.6 kip must be applied along the negative y-direction ($P_y = -438.6$ kip) to produce a 0.25-in. displacement ($u = 0.25$ in.) along the x-direction.

Theorem 10—Maxwell's Reciprocal Theorem

Maxwell's reciprocal theorem is a special case of Betti's theorem for a unit value of applied loads ($P^{\text{I}} = P^{\text{II}} = 1$) as shown in Fig. 12-16.

For an elastic body in equilibrium, the displacement (X^{I}) produced at a location (C) along a prescribed direction (see Fig. 12-16*a*) due to a unit load applied at another location (A) along a specified direction is equal to the displacement induced at A along the prescribed direction for a unit value of load at C along the specified direction.

Mathematically, the theorem can be stated as

$$X^{\text{I}} = X^{\text{II}} \tag{12-129}$$

Equation (12-129) can be obtained from Betti's theorem given by Eq. (12-126) for unit values of the loads ($P^{\text{I}} = P^{\text{II}} = 1$). Maxwell's theorem provides a definition for the flexibility coefficients.

Equation (12-126*a*) can be written as

$$g_{12} = \frac{1}{K_{12}} = \frac{X^{\text{I}}}{P^{\text{I}}} = X^{\text{I}} \text{ for unit } P^{\text{I}} = 1 \tag{12-130a}$$

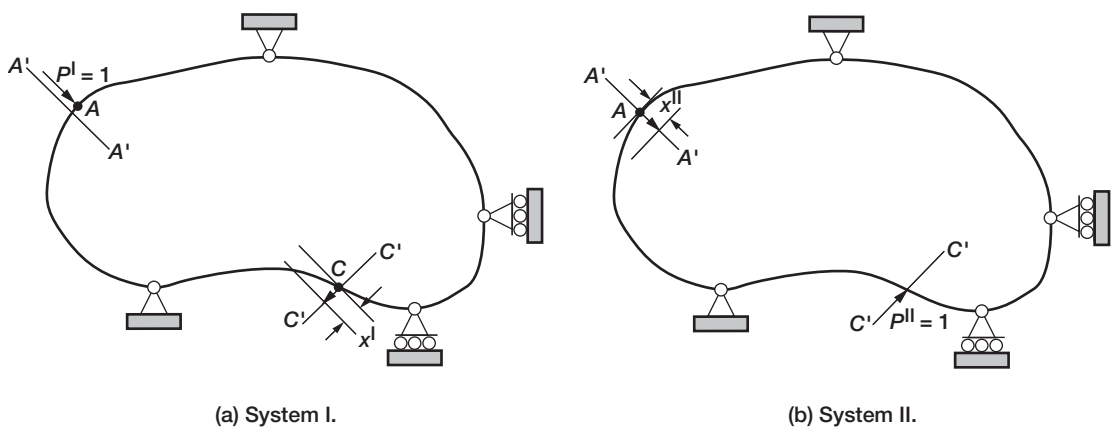

(a) System I. (b) System II.

FIGURE 12-16 *Illustration for Maxwell's theorem.*

The flexibility coefficient g_{12} represents the displacement X^{I} induced at C along direction $C'C'$ shown in Fig. 12-16a, for a unit of load ($P^{\mathrm{I}} = 1$) at A along direction AA'.

Likewise, Eq. (12-126c) can be rewritten as

$$g_{21} = \frac{1}{K_{21}} = \frac{X^{\mathrm{II}}}{P^{\mathrm{II}}} = X^{\mathrm{II}} \quad \text{for} \quad P^{\mathrm{II}} = 1 \tag{12-130b}$$

The flexibility coefficient g_{21} represents the displacement (X^{II}) induced at A along direction AA' for a unit load of $P^{\mathrm{II}} = 1$ at C along CC'.

Maxwell's theorem given by Eq. (12-129) ensures the symmetry of the flexibility coefficients.

$$g_{12} = g_{21} \tag{12-130c}$$

Equations (12-126d) and (12-130c) can be generalized to obtain the symmetry condition for the stiffness and flexibility coefficients

$$K_{ij} = K_{ji} \tag{12-131a}$$

$$g_{ij} = g_{ji} \tag{12-131b}$$

The stiffness coefficient K_{ij} represents the force at i for unit displacement at j. The flexibility coefficient g_{ij} represents the displacement induced at i for a unit force at j. The stiffness coefficient K_{ij} is the reciprocal of the flexibility coefficient g_{ij} and vice versa.

$$K_{ij} = \frac{1}{g_{ij}} \tag{12-131c}$$

The stiffness and flexibility coefficients are obtained from the force and displacement, which are vector quantities. The reader must pay attention to the point of application (for example, A in Fig. 12-16), direction AA', and the magnitude of the force and displacement.

Maxwell's reciprocal theorem is illustrated by considering the three-bar truss shown in Fig. 12-15 as an example. For system I: A unit load of $P^{\mathrm{I}} = P_x = 1$ kip, applied along the x-direction at node 1, a displacement $X^{\mathrm{I}} = v_1 = -0.57 \times 10^{-3}$ in., is induced along the y-direction. For system II: A unit load of $P^{\mathrm{II}} = P_y = 1$ kip, applied along the y-direction, the induced displacement is $X^{\mathrm{II}} = u_1 = -0.57 \times 10^{-3}$ in., along the x direction at node 1. Maxwell's reciprocal theorem is verified because $X^{\mathrm{I}} = X^{\mathrm{II}}$.

$$X^{\mathrm{I}} = v_1 = X^{\mathrm{II}} = u_1 = -0.57 \times 10^{-3} \text{ in.}$$

The flexibility coefficients can be calculated from Eqs. (12-130a) and (12-130b).

$$g_{12} = g_{21} = -0.57 \times 10^{-3} \text{ in.-k} \tag{12-132a}$$

$$K_{12} = K_{21} = \frac{1}{g_{12}} = \frac{1}{g_{21}} = -\frac{1}{0.57 \times 10^{-3}} = -1754.4 \text{ in.-k} \tag{12-132b}$$

The reciprocity between the stiffness and flexibility coefficient is verified. The product of the stiffness and flexibility coefficient is unity.

$$K_{12}g_{12} = K_{21}g_{21} = K_{ij}g_{ij} = 1 \tag{12-133}$$

Theorem 11—Principle of Superposition

According to this principle, the total response of a structure in equilibrium can be obtained by superposing individual responses that satisfy the constraints of the problem. The principle of superposition is illustrated through three simple examples shown in Fig. 12-17: a simply supported beam, a fixed beam, and a three-bar truss.

Simply supported beam: A simply supported beam subjected to two loads (P_1, P_2) at quarter-and half-span locations is shown in Fig. 12-17*a*. Calculate the reaction at A, R_A.

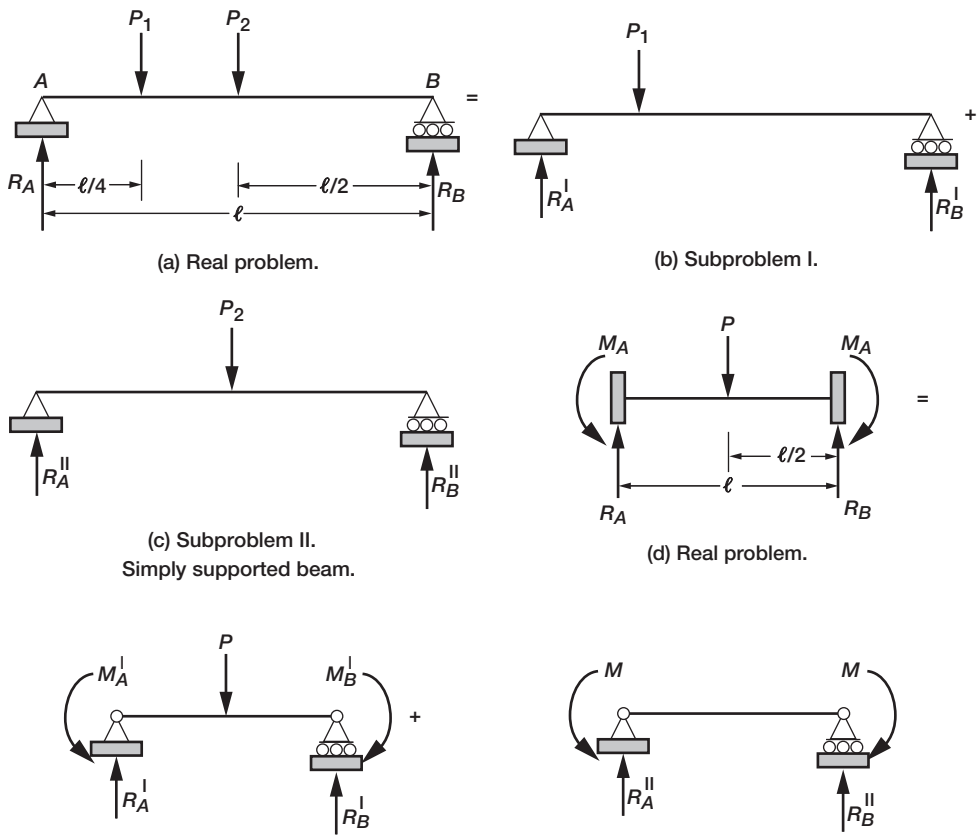

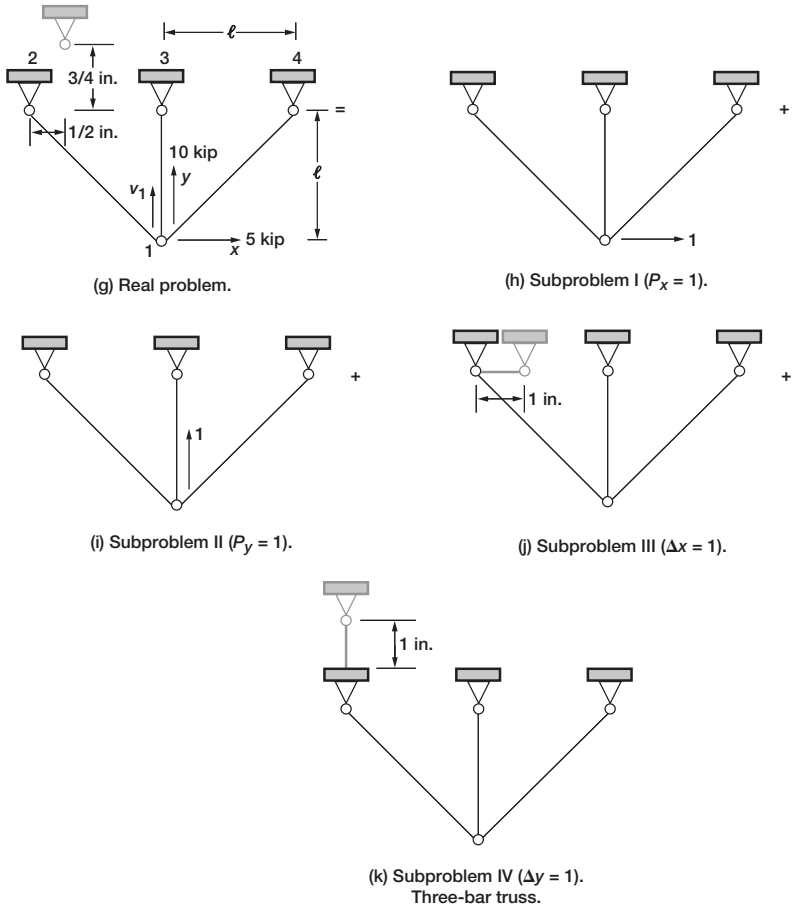

FIGURE 12-17 *Illustration of the superposition principle.*

Reaction R_A can be calculated as the superposition of reactions R_A^{I} and R_A^{II} for the two subproblems I and II, respectively. Subproblem I is the same beam but it is subjected to only load P_1 with reactions R_A^{I} and R_B^{I}. Subproblem II is subjected to only load P_2 with reactions R_A^{II} and R_B^{II}. According to the principle of superposition the reaction at A for the real problem is the sum of the subproblem reactions.

$$R_A = R_A^{\mathrm{I}} + R_A^{\mathrm{II}} \tag{12-134}$$

For subproblem I, the reaction can be calculated as

$$R_A^{\mathrm{I}} = \frac{3}{4} P_1 \tag{12-135a}$$

Likewise, for subproblem II, the reaction can be obtained as

$$R_A^{\mathrm{II}} = \frac{P_2}{2} \tag{12-135b}$$

Reaction R_A for the real problem from Eq. (12-134) becomes

$$R_A = \frac{3P_1}{4} + \frac{P_2}{2} \tag{12-135c}$$

Solution R_A obtained as the superposition of the subproblem reactions is easily verified for the real problem.

Clamped beam: The clamped beam shown in Fig. 12-17*d* is subjected to a load P at the center span. Calculate the reactions (M_A, R_A) at support A. The reactions can be determined as the superposition of the reactions to the two subproblems shown in Figs. 12-17*e* and *f*.

$$R_A = R_A^{\mathrm{I}} + R_A^{\mathrm{II}} \tag{12-136a}$$

$$M_A = M_A^{\mathrm{I}} + M_A^{\mathrm{II}} \tag{12-136b}$$

The beam in subproblem I is a simply supported beam and it is subjected to the load P. The beam is obtained by releasing both the rotational restraints of the real clamped beam. The solution to subproblem I is obtained as

$$R_A^{\mathrm{I}} = \frac{P}{2} \quad \text{and} \quad M_A^{\mathrm{I}} = 0 \tag{12-136c}$$

The rotation (θ_A^{I}) at A is calculated as

$$\theta_A^{\mathrm{I}} = -\frac{P\ell^2}{16EI} \tag{12-136d}$$

Subproblem II is the same determinate structure as subproblem I. It is subjected to a moment M at both ends as shown in Fig. 12-17*f*. The solution to the problem follows:

$$R_A^{\mathrm{II}} = 0 \tag{12-136e}$$

$$M_A^{\mathrm{II}} = M \tag{12-136f}$$

$$\theta_A^{\mathrm{II}} = \frac{M\ell}{2EI} \tag{12-136g}$$

The subproblem superposition will be valid provided the rotation at A and B between subproblem I and II is restored to the rotation of the real problem, or $\theta_A = 0$.

$$\theta_A = 0 = \theta_A^{\mathrm{I}} + \theta_A^{\mathrm{II}} \tag{12-137a}$$

$$-\frac{P\ell^2}{16EI} + \frac{M\ell}{2EI} = 0 \tag{12-137b}$$

or

$$M = \frac{P\ell}{8} \tag{12-137c}$$

Reactions of the real problem are obtained as

$$R_A = R_A^{\mathrm{I}} + R_A^{\mathrm{II}} = \frac{P}{2} \tag{12-138a}$$

$$M_A = M_A^{\mathrm{I}} + M_A^{\mathrm{II}} = \frac{P\ell}{8} \tag{12-138b}$$

The indeterminate beam shown in Fig. 12-17*d* is solved as the superposition of two determinate problems and imposing the rotational boundary condition.

Three-bar truss: The three-bar truss shown in Fig. 12-17*g* is subjected to loads ($P_x = 5$ kip, $P_y = 10$ kip) and support at node 2 settles ($\Delta x = 0.5$ in., $\Delta y = 0.75$ in.) along the x- and y-directions, respectively. Calculate the displacement (v_1) at node 1 along the y-direction.

The real displacement (v_1) can be calculated by superposing the individual displacement calculated for the four subproblems shown in Figs. 12-17*h*, *i*, *j*, and *k*. Each subproblem is a three-bar truss. The first subproblem is subjected to a single unit load ($P_x = 1$ kip) along x-direction as shown in Fig. 12-17*h* and the contribution to displacement is (v_1^{I}). The second subproblem is subjected to a single unit load ($P_y = 1$ kip) along y-direction as shown in Fig. 12-17*i* and the contribution to displacement is (v_1^{II}). The third subproblem is subjected to a unit settling of node 2($\Delta_x = 1$ in.) along x-direction as shown in Fig. 12-17*j* and the contribution to displacement is (v_1^{III}). The fourth subproblem is subjected to a unit settling of node 2($\Delta_y = 1$ in.) along y-direction as shown in Fig. 12-17*k* and the contribution to displacement is (v_1^{IV}). The real displacement is (v_1) is obtained as the weighted sum of the individual contributions.

$$v_1 = 5v_1^{\mathrm{I}} + 10v_1^{\mathrm{II}} + \frac{1}{2}v_1^{\mathrm{III}} + \frac{3}{4}v_1^{\mathrm{IV}} \tag{12-139}$$

The solution to displacement (v_1^{I}) for subproblem I is obtained for a unit load of $P_x^{\mathrm{I}} = 1$. The displacement contribution for real load ($P_x = 5$ kip) of the real problem is calculated by prorating five times the displacement v_1^{I}. This proration in Eq. (12-139) is accommodated through the coefficient (5) in the first term. For subproblem I, the displacement solution is

$$v_1^{\mathrm{I}} = -0.57 \times 10^{-3}\text{in.} \tag{12-140a}$$

The solution to subproblem II for a unit load of $P_y = 1$ is calculated as

$$v_1^{\mathrm{II}} = 1.72 \times 10^{-3}\,\text{in.} \tag{12-140b}$$

The proration factor for v_1^{II} is 10.

The solution to subproblem III is obtained for a support 2 settlement of $\Delta x = 1$ in. and the proration factor is (1/2).

$$v_1^{\mathrm{III}} = 0.243\,\text{in.} \tag{12-140c}$$

Likewise, the solution to subproblem IV is obtained for a support 2 settlement of $\Delta y = 1$ in. and the proration factor is (3/4).

$$v_1^{\mathrm{IV}} = -0.243\,\text{in.} \tag{12-140d}$$

The real displacement (v_1) can be calculated from Eqs. (12-139) and (12-140) as

$$v_1 = -5\left(0.57 \times 10^{-3}\right) + 10\left(1.72 \times 10^{-3}\right) + 0.5(0.243) - 0.75(0.243)$$

or

$$v_1 = 0.0464\,\text{in.} \tag{12-141}$$

The solution of the real problem yields the same displacement ($v_1 = 0.0464$in.).

Problems

Use the properties of material given in Tables A5-1 and A5-2 to solve of the problems.

12-1 The three-bar truss shown in Fig. P12-1 is made of steel (bars 1 and 3) and aluminum (bar 2). The cross-sectional area is 1 in.^{2} and other dimensions are marked in the figure. It is subjected to a mechanical load ($P = -5$ kip) and the temperature in the middle bar is changed by ($\Delta T = 100°$F). The truss has been analyzed and displacements at node 1 are ($X_1 = 0.0$ and $X_2 = -0.058$ in.). Calculate the following parameters for the truss.

(a) Total deformations $\{\beta\}$, initial deformations $\{\beta\}^0$ and elastic deformations $\{\beta\}^e$ as well as forces $\{F\}$ in the truss bars
(b) Strain energy density in bar 1, complementary strain energy density in bar 2, strain energy density of total deformation in bar 3, and complementary strain energy density of total deformation in bar 1
(c) Strain energy and complementary strain energy stored in the truss
(d) Work done by the external load
(e) Show the relationships between the three scalar quantities (work, strain energy, and complementary strain energy)

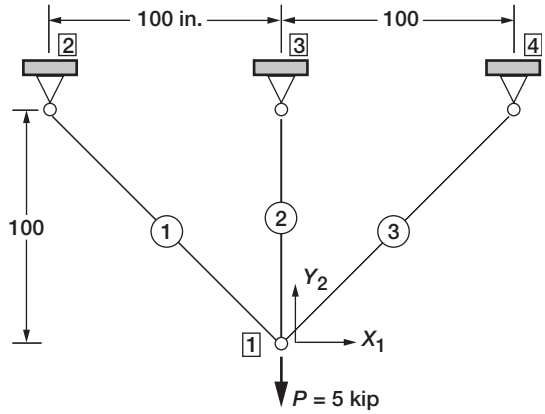

FIGURE P12-1

12-2 For the three-bar truss Problem 12-1 derive the equilibrium equation ($[B]\{F\} = \{P\}$) using the virtual work principle. Verify your answer by writing the equilibrium of bar forces and load.

12-3 For the three-bar truss Problem 12-1 derive the stiffness equations from the principle of minimum potential energy. Verify your answer by expressing the equilibrium equations obtained in Problem 12-2 in displacement variables.

12-4 For Problem 12-1, calculate the minimum value of the potential energy functional (π_p) and show its value in terms of the work done.

12-5 A steel cantilever beam of rigidity (EI) and length (ℓ) is subjected to two load cases as shown in Figs. P12-5*a* and *b*, respectively. The deflection [$v(x)$] formulas are as follows:

(a) A concentrated load P as shown in Fig. P12-5*a*.

$$v^p(x) = -\frac{Px^2}{6EI}(3\ell - x)$$

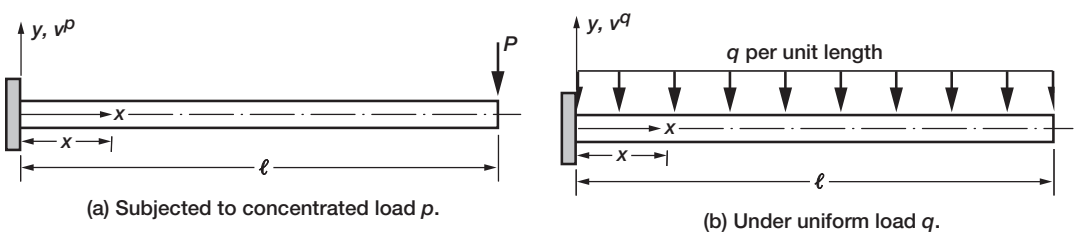

FIGURE P12-5

(b) Uniformly distributed load of intensity q as shown in Fig. P12-5b.

$$v^q(x) = -\frac{qx^2}{24EI}\left(6\ell^2 - 4\ell x + x^2\right)$$

(i) Calculate the displacement (v^ℓ) and slope (θ^ℓ) at the tip of the cantilever ($x = \ell$) for both load cases.

(ii) Calculate strain energy stored in the beam as a function of (v^ℓ and θ^ℓ) for both load cases.

(iii) Use Castigliano's first theorem to verify the magnitude of the external loads for both cases.

12-6 Derive the equilibrium equation along the x-direction at node 1 for the truss in Problem 12-1 by applying the unit displacement theorem. Repeat the derivation of the EE along the y-direction using the principle of virtual work. Compare the two derivation strategies.

12-7 A uniform steel column of length (2ℓ) is restrained at both ends as shown in Fig. P12-7. It is subjected to load P at its midspan location. The column is one-degree indeterminate. Formulate the deformation displacement relation using the principle of complementary virtual work, then derive the compatibility condition from the DDR. Derive the CC again using the concept of redundant force. Compare the two derivation strategies.

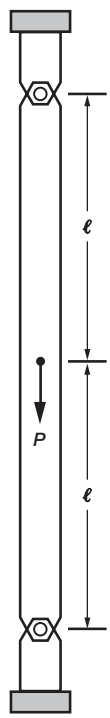

FIGURE P12-7

12-8 Generate the compatibility condition for the column in Problem 12-7 from the stationary condition of the complementary energy functional.

12-9 Calculate the axial displacement at the point of application of the load in the column of Problem 12-7 using Castigliano's second theorem. Verify your solution from the unit load theorem.

12-10 Verify Betti's theorem for the cantilever beam in Problem 12-5 by calculation the work done for the two load cases. For distributed load work can be calculated from the following integral.

$$w^{v^P q} = \int_0^{\ell} \frac{Px^2}{6EI}(3\ell - x)q = \frac{Pq\ell^4}{8EI}$$

12-11 A simply supported steel beam with uniform (EI) is subjected to a unit load at midspan location (C) and a unit moment at support A as shown in Fig. P12-11. Illustrate Maxwell's reciprocal theorem by calculating the flexibility coefficients (g_{CA} and g_{AC}). Use the following deflection formulas.

Deflection for load shown in Fig. P12-11a

$$v^{P=1} = \frac{x}{48EI}\left(3L^2 - 4x^2\right) \text{ for } \left(0 \le x \le \frac{L}{2}\right), \text{symmetrical about the center}$$

Deflection for load shown in Fig. P12-11a

$$v^{M=1} = \frac{x}{6\ell EI}\left(2\ell^2 - 3\ell x + x^2\right)$$

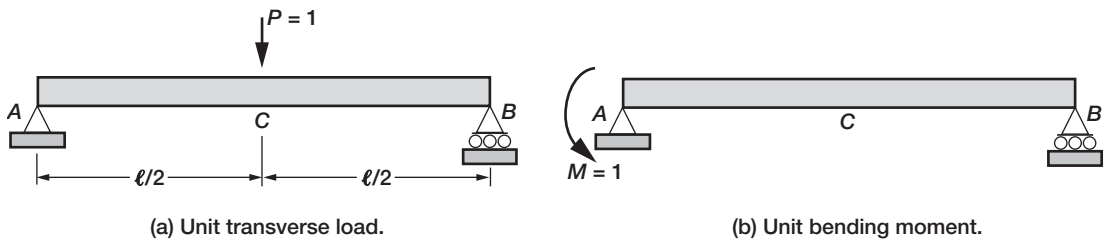

(a) Unit transverse load. (b) Unit bending moment.

FIGURE P12-11

12-12 Solve the continuous beam with uniform (EI), subjected to uniform load (q), shown in Fig. P12-12a, using the principle of superposition. Graph bending moment, shear force, and transverse displacement functions along the beam length. Displacement solutions to a simply supported beam are given for two load cases.

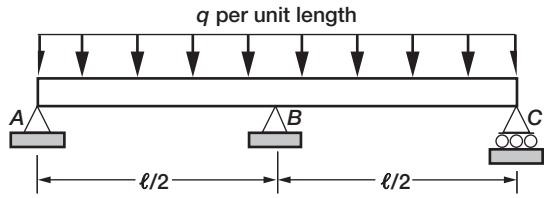

(a) Continous beam.

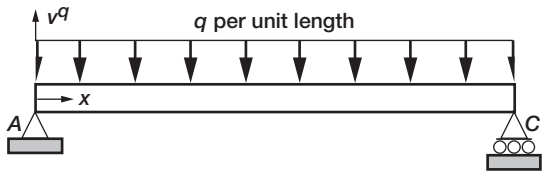

(b) Simply supported beam under uniform load.

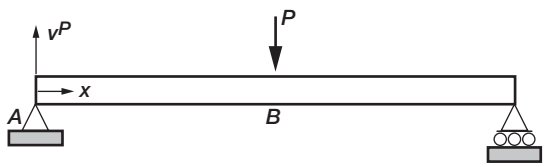

(c) Simply supported beam subjected to concentrated load.

FIGURE P12-12

Displacement (v^P) for distributed load as shown in Fig. P12-12*b*

$$v^q(x) = -\frac{qx}{24EI}\left(\ell^3 - 2\ell x^2 + x^3\right)$$

Displacement (v^P) for concentrated load as shown in Fig. P12-12*c*

$$v^P(x) = \frac{Px}{48EI}\left(3\ell^2 - 4x^2\right) \text{ for } \left(0 \le x \le \frac{\ell}{2}\right), \text{symmetrical about } B$$

13 Finite Element Method

Internal forces and displacements are the primary unknowns of discrete structures, including frameworks (that is, trusses and frames) and continuous structures (such as plates, shells, and solids) idealized by finite elements. For the purpose of analysis, such structural models can be designated by two attributes, n and m, such as "structure (n, m)." The number of force unknowns or force degrees of freedom (^{n}fof) is n. Likewise, the number of displacement degrees of freedom (^{m}dof) is m. Once the n forces $\{F\}$ are determined, then the m displacements $\{X\}$ can be back-calculated from known forces, and vice versa. The method that treats all ^{n}fof as the principal unknowns is known as the force method. Likewise, the method that treats all ^{m}dof as the principal unknowns is called the displacement method. The force method and the displacement method are the two fundamental structural mechanics formultions.

The displacement method, also known as the stiffness method, has been well researched and developed during the past few decades. This method currently dominates the analysis scenario. Its governing equation is ($[K]\{X\} = \{P\}$), where $[K]$ is the stiffness matrix, $\{X\}$ is the displacement vector, and $\{P\}$ is the load vector. The method is indirect because forces and stresses are back-calculated from the displacements, and the derived quantities can be susceptible to inaccuracies. Yet the method is popular because of its simplicity, versatility, and computer amenability. The stiffness method parallels the Navier's displacement formulation in elasticity (see Table 13-1).

The force method is the direct force determination formulation. One would have anticipated that all n internal forces $\{F\}$ would have been the primary unknowns of the force method with a basic equation ($[S]\{F\} = P^{*}\}$), where $[S]$ is the governing matrix, and that the force method in structures would have paralleled the Beltrami-Michell Formulation in elasticity (see Table 13-1). However, the classical force method, with redundants as the unknowns, satisfies neither attribute. Although the redundant method is elegant for manual computation of small problems for static loads, the classical formulation is cumbersome for

TABLE 13-1 Methods of Structural Mechanics and Associated Variational Functionals

Method Number	*Method*		*Primary Variables*		*Variational Functional*
	Elasticity	*Structures*	*Elasticity*	*Structures*	
1	Completed Beltrami-Michell Formulation (CBMF)	Integrated Force Method (IFM)	Stresses	Forces	IFM variational functional
2	Airy formulation	Redundant force method	Stress function	Redundants	Complementary energy
3	Navier Formulation (NF)	Stiffness method (DM)	Displacements	Displacements or deflections	Potential energy
4	Hybrid method (HF)	Reissner method (RM)	Stresses and displacements	Forces and deflections	Reissner functional
5	Total formulation (TF)	Washizu method (WM)	Stresses, strains, and displacements	Forces, deformations, and deflections	Washizu functional

computer automation; and for all practical purposes, it has disappeared from current use. The redundant force method, which has considerable historical significance, is discussed in Chapter 14.

A force method that could be considered equivalent to the Beltrami-Michell stress formulation in elasticity was not available because the understanding and the development of the compatibility conditions (CC) were immature. We have researched and have come to understand the CC of structural mechanics. We express the CC for discrete analysis first in terms of deformations $\{\beta\}$ as $[C]\{\beta\} = 0$ (here $[C]$ is the compatibility matrix), then in terms of all ($^n fof$) force variables as $[C][G][F] = \{\delta R\}$ (here $[G]$ is the flexibility matrix and $\{\delta R\}$ is the effective initial deformation vector). Thus, the classical, redundant-based, ad hoc compatibility has been replaced by the correct CC representing the deformation balance condition. The CC are coupled next with the equilibrium equations $[B]\{F\} = \{P\}$ (here $[B]$ is the equilibrium matrix, $\{F\}$ is the force vector, and $\{P\}$ is the load vector), to obtain the direct force determination method, which in the literature is referred to as the Integrated Force Method (IFM). The IFM with forces $\{F\}$ as the unknowns parallels the Beltrami-Michell Formulation in elasticity, with the governing equation $[S]\{F\} = \{P\}^*$. Displacement are back-calculated using a formula $\{X\} = [J][G]\{F\}$ (here $[J]$ is the displacement coefficient matrix). The IFM is as versatile as the stiffness method, and it is amenable to computer automation. It produces accurate stress and displacement solutions, even for modest finite element models.

A dual formulation to the primal IFM, referred to as the Dual Integrated Force Method (IFMD), has been formulated. The dual method uses the elemental matrices of IFM, but displacements are its primal unknowns with the governing matrix ($[D]\{X\} = \{P\}$). Forces $\{F\}$ in the dual method are back-calculated as $\{F\} = [G]^{-1}[B]^T\{X\}$. The primal IFM and dual IFMD are equivalent formulations and produce identical results for forces and displacements. In the earlier chapters, the IFM was developed for elementary, indeterminate structural mechanics problems. In this chapter, the finite element analysis is introduced through all three methods.

1. Integrated Force Method (IFM)
2. Dual Integrated Force Method (IFMD)
3. Stiffness Method (SM).

13.1 Finite Element Model

The basic finite element concept is introduced considering a plate subjected to loads in the (x, y) coordinate plane. The structure is supported at four locations and it is subjected to loads at three points as shown in Fig. 13-1*a*. This is a membrane structure and it can be analyzed as a two-dimensional elasticity problem with three stresses (σ_x, σ_y, and τ_{xy}) and two displacements (u, v). The stress and displacement are a function of the coordinates (x, y) only. Elasticity analysis requires the solution of differential equations, which may be quite difficult to solve, even for this modest problem. The finite element method is an alternative technique for the solution of the problem. Discretization is a basic finite element concept. This

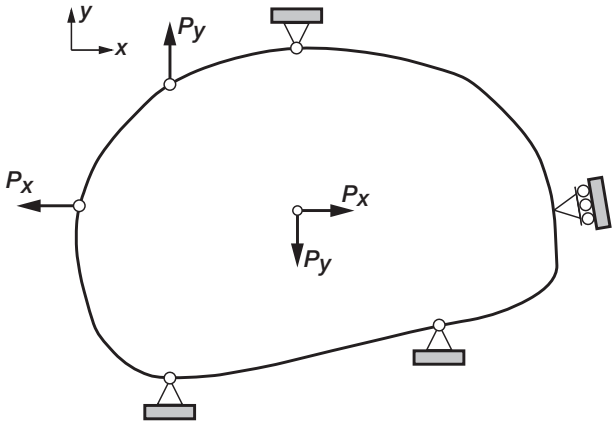

(a) Plate under inplane load.

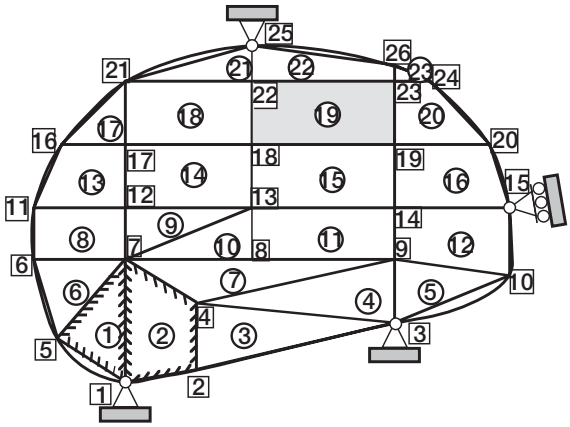

(b) Finite-element model. Elements are circled, nodes are boxed.

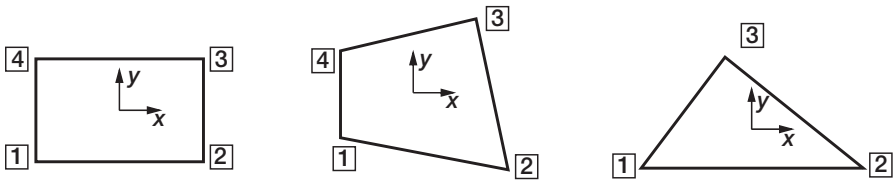

(c) Finite elements.

FIGURE 13-1 *Finite-element model.*

modeling process replaces the original structure as a series of small elements. The model becomes as an assemblage of small parts, which are referred to as finite elements. Each element is of a simple geometry and its behavior is easy to approximate. For example, a finite element model as shown in Fig. 13-1*b* replaces the membrane plate. This model is made of quadrilateral, rectangular, and triangular elements, depicted in Fig. 13-1*c*. A total of 23 finite elements are required to model the plate. The model has six quadrilateral elements, six rectangular elements, and eleven triangular elements. The model has covered the entire structure but for small portions near elements 1, 5, 21, and 22. These small portions can be neglected or accounted for using advanced elements with quadratic or nonlinear boundaries. The 23 elements are circled and the 26 nodes or grid points are boxed. It is assumed that the response of the structure can be obtained from the response of the finite element model with 26 nodes and 22 elements. Several finite element modes with a different number of elements and nodes should be solved until a satisfactory convergence of the response parameters is obtained, being the forces or stresses and displacements.

Finite element analysis is introduced considering three illustrative examples.

1. A fixed bar shown in Fig. 13-2*a*. This structure is modeled using bar elements.
2. A single-bay truss shown in Fig. 13-2*b*. This structure is modeled using bar elements.
3. A cantilever beam shown in Fig. 13-2*c*. This structure is modeled using membrane elements.

Each structure is solved using the three methods: IFM, IFMD, and the stiffness method. The equations of the three methods are presented prior to the solution of the examples.

Equations of Integrated Force Method

The IFM considers the forces $\{F\}$ as the primary unknowns. The displacements $\{X\}$ are back-calculated from the forces. IFM has two sets of equations. The first set is used to calculate the forces. The second set is used to back-calculate the displacements. IFM equations for a continuum discretized by finite elements with n and m force and displacement degrees of freedom, respectively, are obtained by coupling the m EE and the $(r = n - m)$ CC. The m equilibrium equations $([B]\{F\} = \{P\})$ and the r compatibility conditions $([C][G]\{F\} = \{\delta R\})$, when combined to obtain the IFM governing equations for static analysis, can be written as

$$\begin{bmatrix} [B] \\ \hline [C][G] \end{bmatrix} \{F\} = \left\{ \begin{array}{c} \{P\} \\ \hline \{\delta R\} \end{array} \right\} \quad \text{or} \quad [S]\{F\} = \{P^*\} \tag{13-1}$$

From forces $\{F\}$, displacements $\{X\}$ are back-calculated with the following formula:

$$\{X\} = [J]\left\{[G]\{F\} + \left\{\beta^0\right\}\right\} \tag{13-2}$$

where $[J] = m$ rows of $[[S]^{-1}]^T$.

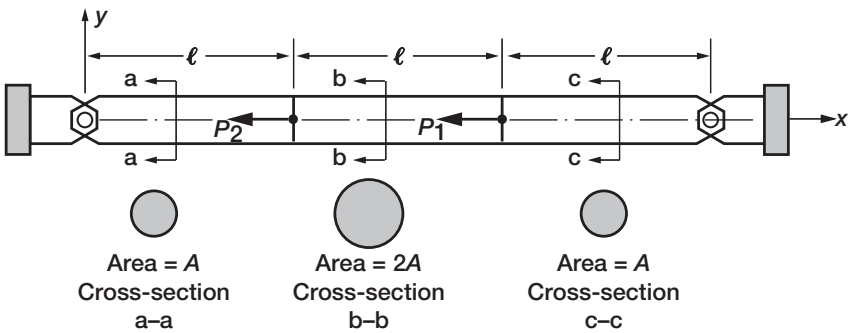

(a) Fixed bar.

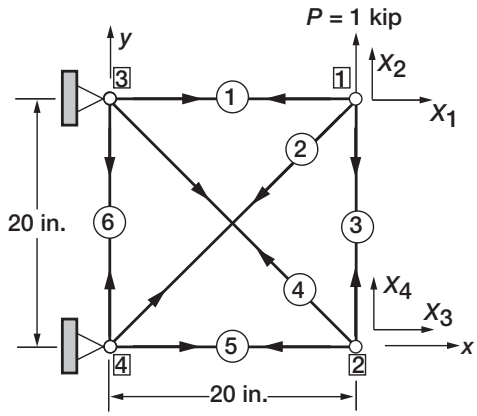

(b) Single-bay truss.

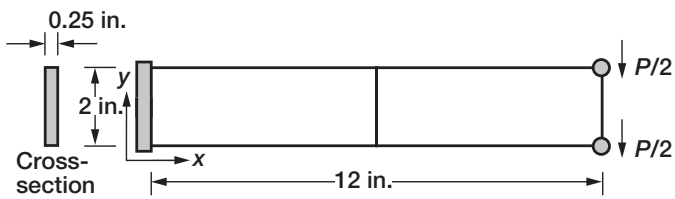

(c) Cantilevered beam.

FIGURE 13-2 *Illustrative examples.*

Derivation of Eq. (13-2) is rather involved and it is avoided here. A definition of the matrices and vectors in Eqs. (13-1) and (13-2) follows:

$[B]$ is the $(m \times n)$ rectangular equilibrium matrix with more columns than rows. It is a very sparse, unsymmetrical matrix with full row rank (m).

$[G]$ is the $(n \times n)$ symmetrical concatenated flexibility matrix. It is a block-diagonal matrix with rank (n). Each block represents a flexibility matrix of a finite element.
$[C]$ is the $(r \times n)$ compatibility matrix with full row rank (r). $\{\delta R\} = -[C]\{\beta\}^0$ is the effective initial deformation vector. Here, $\{\beta\}^0$ is the initial deformation vector of dimension n.
$[S]$ is the $(n \times n)$ IFM governing unsymmetrical matrix with rank (n) as defined in Eq. (13-1).
$[J]$ is the $(m \times n)$ deformation coefficient matrix back-calculated from the $[S]$ matrix.

The IFM has two key equations: Eq. (13-1) to calculate forces, and Eq. (13-2) to calculate displacements. The process of differentiation used in the popular stiffness method to generate stresses from displacements is avoided in the IFM.

Equations of the Dual Integrated Force Method

Mapping forces into displacements generate the Dual Integrated Force Method (IFMD). The basic equations of the dual formulation, without initial deformations are summarized next.

Static analysis equations of the IFMD are as follows:

$$[D]\{X\} = \{P\} \tag{13-4}$$

Forces can be obtained from displacements by using the following formulas:

$$\{F\} = [G]^{-1}[B]^T\{X\} \tag{13-5}$$

where, the $(m \times m)$ symmetrical matrix ($[D] = [B][G]^{-1}[B]^T$) is assembled at the element level. IFM and IFMD provide identical solutions for stresses and displacements.

Equations of the Stiffness Method

Displacements $\{X\}$ are the primary unknowns of the stiffness method. Solution of the stiffness equation yields the displacements.

$$[K]\{X\} = \{P\} \tag{13-6}$$

Here, $[K]$ is the $(m \times m)$ symmetrical stiffness matrix. $\{X\}$ and $\{P\}$ are the m-component displacement and load vectors, respectively. The stiffness equation resembles the IFMD equation ($[D]\{X\} = \{P\}$). In the stiffness method the force variables are back-calculated from the displacement but a single formula is not available. For frameworks like trusses and frames, the IFMD matrix $[D]$ is equal to the stiffness matrix $[K]$ and calculation is similar for both methods. For continuous structures like plates and shells the same may not be true.

13.2 Matrices of the Finite Element Methods

Three matrices are required for IFM finite element analysis—namely the equilibrium matrix $[B]$, the flexibility matrix $[G]$, and the compatibility matrix $[C]$. The dual method requires the matrix $[D]$, while the stiffness method requires the matrix $[K]$. The generation of the matrices is illustrated by considering a bar and a membrane plate element. Discretizing a strain energy expression generates most of the matrices. The energy expressions are listed for bar and membrane elements.

Strain energy expression for bar element: A bar has a single force variable (F) and a single displacement function (u). Bar element uses three different energy formulas.

(1) Strain energy (U_p^{bar}) expressed in force and displacement variables

$$U_p^{bar} = \int \{\sigma\}^T \{\varepsilon\} dv = \int_0^{\ell} \left\{ F \frac{\partial u}{\partial x} \right\} dx \tag{13-7a}$$

where F is the internal force and it is uniform across the bar length. The displacement function is $u(x)$.

The parameters of a bar element are illustrated in Fig. 13-3. It has a length (ℓ), two nodes (1 and 2), and a uniform cross-sectional area (A) as shown in Fig. 13-3a. The single internal force (F) is its force variable as marked in Fig. 13-3b. The force balance condition produces nodal forces $\{q\}$. At node 1 ($q_1 = -F$), and at node 2 ($q_2 = F$). Note that the force unknown (F) is the independent internal force variable. The nodal forces are dependent on the force unknowns and are back-calculated. It has two displacement degrees of freedom (u_1 and u_2) as shown in Fig. 13-3c.

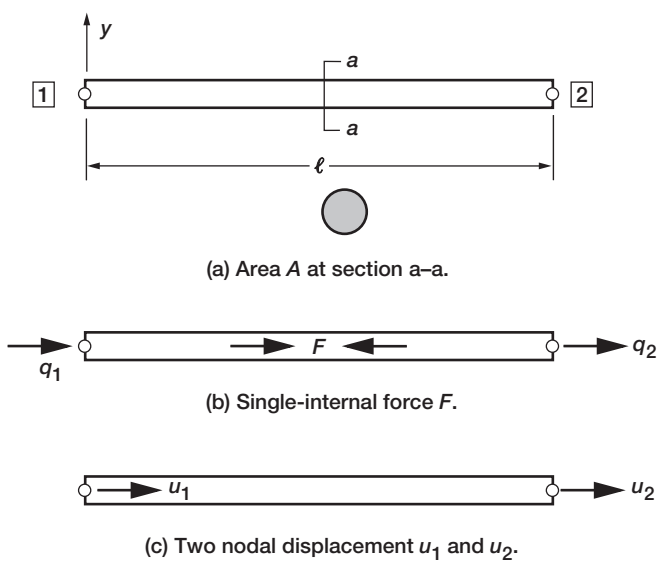

FIGURE 13-3 *Bar element.*

(2) Complementary strain energy (U_c^{bar}) in force variable

$$U_c^{bar} = \frac{1}{2}\int_v \{\sigma\}^T [D^b]\{\sigma\} dv = \frac{1}{2AE}\int_0^\ell F^2 dx$$

$$[D^b] = \left[\frac{1}{E}\right] \tag{13-7b}$$

where E is the Young's modulus of elasticity. The complementary energy is a quadratic function in the internal force (F).

(3) Strain energy (U_{stif}^{bar}) expressed in displacement variables

$$U_{stif}^{bar} = \frac{1}{2}\int_v \{\varepsilon\}^T [E_m]\{\varepsilon\} dv = \frac{AE}{2}\int_0^\ell \left(\frac{\partial u}{\partial x}\right)^2 dx$$

$$[E_m^b] = [E] \tag{13-7c}$$

The energy is a quadratic function in the displacement variable (u).

Strain energy expression for a rectangular membrane element also has three formulas. The membrane force variables are defined as a product of stress and thickness t, as ($N_x = t\sigma_x$, $N_y = t\sigma_y$, and $N_{xy} = t\tau_{xy}$). It has two displacement functions (u and v).

(4) Strain energy (U_p^{mem}) expressed in force and displacement variables

$$U_p^{mem} = \int_S \left\{ N_x \frac{\partial u}{\partial x} + N_y \frac{\partial v}{\partial y} + N_{xy}\left(\frac{\partial u}{\partial y} + \frac{\partial v}{\partial x}\right)\right\} dxdy$$

$$= \int_V \{\sigma\}^T \{\varepsilon\} dv$$

$$\{\sigma\} = \frac{1}{t}\begin{Bmatrix} N_x \\ N_y \\ N_{xy} \end{Bmatrix} \quad \text{and} \quad \{\varepsilon\} = \begin{Bmatrix} \dfrac{\partial u}{\partial x} \\ \dfrac{\partial v}{\partial y} \\ \dfrac{\partial u}{\partial y} + \dfrac{\partial v}{\partial x} \end{Bmatrix} \tag{13-8a}$$

where, N_x, N_y, and N_{xy} are the three internal forces and these are uniform across the thickness (t) of the membrane element. The displacement functions are $u(x, y)$ and $v(x, y)$.

The parameters of a rectangular element are illustrated in Fig. 13-4. It has dimensions ($2a$ and $2b$) along x- and y-coordinates, respectively. It has four nodes (1, 2, 3, and 4) and a uniform thickness (t).

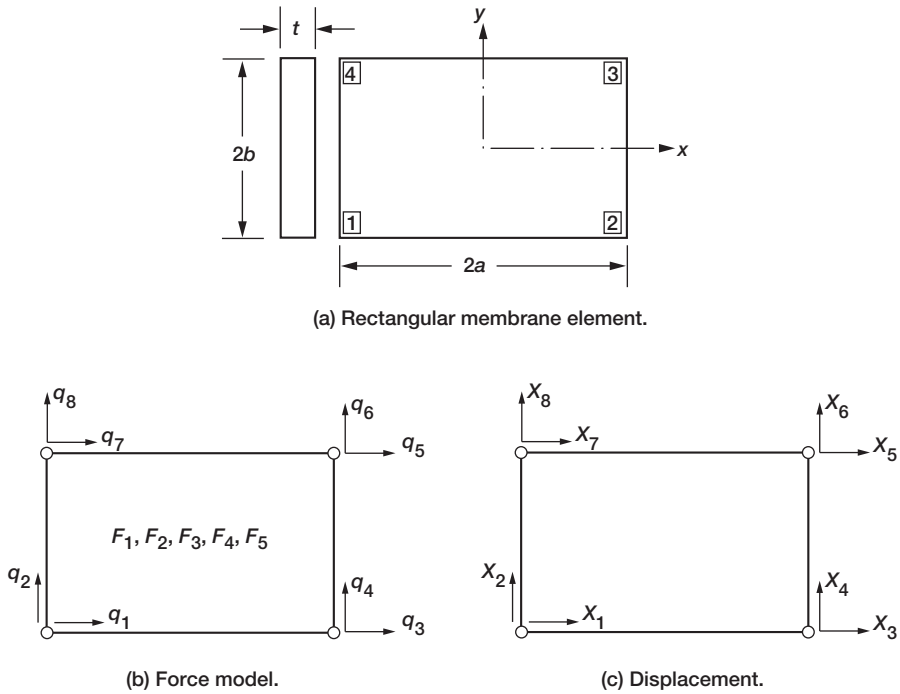

FIGURE 13-4 *Rectangular membrane element.*

(5) Complementary strain energy (U_c^{mem}) in force variables

$$U_c^{mwm} = \frac{1}{2Et}\int_S \left\{N_x^2 + N_y^2 - 2\nu N_x N_y + 2(1+\nu)N_{xy}^2\right\} dxdy$$

$$= \frac{1}{2}\int_V \{\sigma\}^T [D^m]\{\sigma\} dv$$

$$[D^m] = \frac{1}{E}\begin{bmatrix} 1 & -\nu & 0 \\ -\nu & 1 & 0 \\ 0 & 0 & 2(1+\nu) \end{bmatrix} \tag{13-8b}$$

where ν is the Poisson's ratio of the material. The complementary energy is a quadratic function in the force parameters (N_x, N_y, and N_{xy}).

(6) Strain energy ($U_{stif}{}^{mem}$) is expressed in displacement variables

$$U_{stif}{}^{mem} = \frac{Et}{2(1-\nu^2)} \int_S \left\{ \left(\frac{\partial u}{\partial x}\right)^2 + \left(\frac{\partial u}{\partial y}\right)^2 - 2\nu \frac{\partial u}{\partial x}\frac{\partial v}{\partial y} + \frac{(1-\nu)}{2}\left(\frac{\partial u}{\partial y} + \frac{\partial v}{\partial x}\right)^2 \right\} dxdy$$

$$= \frac{1}{2}\int_V \{\varepsilon\}^T [E_m^m]\{\varepsilon\} dv$$

$$\left[E_m^m\right] = \frac{E}{(1-\nu^2)} \begin{bmatrix} 1 & \nu & 0 \\ \nu & 1 & 0 \\ 0 & 0 & \frac{1-\nu}{2} \end{bmatrix} \tag{13-8c}$$

The energy is a quadratic function in the displacement variable u and v. The rectangular element has eight dependent nodal forces ($q_1, q_2, q_3, q_4, q_5, q_6, q_7, q_8$) as shown in Fig. 13-4*b*. These are along the eight displacement detections ($X_1, X_2, \ldots, X_8$) as shown in Fig. 13-4*c*.

Equilibrium Matrix [*B*]

The equilibrium equations, written in terms of forces at the nodes, which are also referred to as the grid points of a finite element model, represent the vectorial summation of n internal forces $\{F\}$ and m external loads $\{P\}$. The nodal EE in matrix notation give rise to a $(m \times n)$-banded rectangular equilibrium matrix $[B]$, which is independent of the material properties and design parameters of the indeterminate structure. For finite element analysis, this matrix is assembled from elemental equilibrium matrices. The elemental equilibrium matrices $[B^e]$ for bar and beam elements can be obtained from the direct force balance principle. Energy-equivalent equilibrium matrices for finite element analysis can be obtained from the energy expressions.

By appropriate choice of force and displacement functions, one can discretize the energy expression (U_p) to obtain the elemental equilibrium matrix $[B^e]$.

$$U_p = \{X\}^T [B^e]\{F\} \tag{13-9}$$

where the elemental displacement degrees of freedom are symbolized by $\{X\}$ and the elemental force degrees of freedom by $\{F\}$.

The force fields have to satisfy two mandatory requirements:

1. The force fields must satisfy the homogeneous field equilibrium equation of elasticity of Cauchy.
2. The force components $F_k (k = 1, 2, \ldots, m)$ must be independent of one another. This condition ensures the kinematic stability of the element, and the resulting $[B^e]$ matrix has a full column rank.

Elemental EE Matrix$[B^e]^{bar}$ for a Bar Element

The elemental matrix is obtained by discretizing the strain energy expression given by Eq. (13-7*a*). This process requires an expression for the internal force (F) and displacement

(u). The equilibrium matrix is generated for the following stress (or force) and displacement functions

$$\sigma = \frac{F}{A} \tag{13-10a}$$

$$u = u_1 + \frac{u_2 - u_1}{\ell} x = \left(1 - \frac{x}{\ell}\right) u_1 + \left(\frac{x}{\ell}\right) u_2 \tag{13-10b}$$

where u_1 and u_2 are the axial nodal displacements for nodes 1 and 2, respectively, as shown in Fig. 13-3c. The uniform internal force in the bar is F, the associated stress is σ, and the area of the bar is A. The displacement u in the field varies linearly along the length of the bar. Equations (13-10a) and (13-10b) can be rewritten using a function interpolation notation, as follows

$$\{\sigma\} = [Y]\{F\} = \left[\frac{1}{A}\right]\{F\}$$

Stress $\{\sigma\}$ is expressed as a product of a matrix $[Y]$ and a vector $\{F\}$. For the bar element, $[Y]$ is a (1×1) matrix and it is the reciprocal of the bar area A ($[Y] = [1/A]$). Matrix $[Y]$ is referred to as the force interpolation matrix. This expression is identically equal to Eq. (13-10a), but it is written in matrix notation.

The displacement vector $\{u\}$ has a single component (u). It is expressed as a product of a matrix $[N]$ and vector of nodal displacements of the element. Here, matrix $[N]$ is a (2×1) matrix. Component $N(1, 1)$ is the coefficient of u_1 in Eq. (13-10b). Likewise, component $N(1, 2)$ is the coefficient of u_2 in Eq. (13-10b).

$$\{u\} = [N]\begin{Bmatrix} u_1 \\ u_2 \end{Bmatrix} = \begin{bmatrix} 1 - \frac{x}{\ell} & \frac{x}{\ell} \end{bmatrix}\begin{Bmatrix} u_1 \\ u_2 \end{Bmatrix}$$

$$\{\varepsilon\} = \left\{\frac{\partial u}{\partial x}\right\} = [L]\,[N]\begin{Bmatrix} u_1 \\ u_2 \end{Bmatrix} = \begin{bmatrix} -\frac{1}{\ell} & \frac{1}{\ell} \end{bmatrix}\begin{Bmatrix} u_1 \\ u_2 \end{Bmatrix}$$

The strain vector $\{\varepsilon\}$ has a single component being the derivative of displacement function (u) with respect to the x-coordinate. The differentiation is symbolized by matrix $[L]$. Because nodal displacements are constant, the operation is carried out on the displacement interpolation matrix $[N]$. The two matrices are combined to obtain $[Z] = [L][N]$. Strain is expressed in terms of matrix $[Z]$ and nodal displacements. Elemental equilibrium matrix $[B^e]^{bar}$ is obtained by substituting expression for stress and strain into Eq. (13-7a) and comparing to Eq. (13-10).

$$[Z] = [L]\,[N] = \begin{bmatrix} -\frac{1}{\ell} & \frac{1}{\ell} \end{bmatrix}$$

$$\{\varepsilon\} = [Z]\begin{Bmatrix} u_1 \\ u_2 \end{Bmatrix} \tag{13-10c}$$

The elemental equilibrium matrix becomes

$$[B^e] = \int_v [Z]^T [Y]\, dv$$

$$\int_0^\ell \begin{bmatrix} -1/L \\ \\ 1/L \end{bmatrix} \left[\frac{1}{A}\right] A\, dx$$

or

$$[B^e] = \begin{bmatrix} -1 \\ 1 \end{bmatrix} \tag{13-11}$$

The equilibrium matrix for a truss element in local coordinates is a (2×1) matrix. Its rows correspond to the two displacements (u_1, u_2). Its single column corresponds to the internal force F. It symbolizes the elemental equilibrium equation.

$$\begin{Bmatrix} q_1 \\ q_2 \end{Bmatrix} = \begin{bmatrix} -1 \\ 1 \end{bmatrix} \{F\}$$

or

$$\{q\} = [B^e]^{bar} \{F\} \tag{13-12}$$

Nodal forces are $\{q\}$; q_1 at node 1 and q_2 at node 2 as shown in Fig. 13-3*b*.

Generation of the Flexibility Matrix [G] for Bar Element

It is obtained by discretization of the complementary strain energy expression. Substituting the force interpolation function ($\{\sigma\} = [Y]\{F\}$) into Eq. (13-7*b*) and integration yields the flexibility matrix.

$$U_c = \frac{1}{2} \{F_e\}^T [G_e]\, \{F_e\} \tag{13-13a}$$

where the element flexibility matrix $[G^e]$ is

$$[G^e] = \int_v [Y]^T [D]\, [Y]\, dv \tag{13-13b}$$

The flexibility matrix for the bar element is obtained as:

$$\varepsilon = \frac{\sigma}{E} \quad \text{or} \quad D = \frac{1}{E}$$

$$[G^e] = \int_v \left[\frac{1}{A}\right]\left[\frac{1}{E}\right]\left[\frac{1}{A}\right] A\,dx$$

or

$$[G^e] = \left[\frac{\ell}{AE}\right] \tag{13-13c}$$

The bar has one force variable and its flexibility matrix is a (1×1) matrix. This matrix links the force variables $\{F\}$ to the deformation variables $\{\beta\}$ as $(\{\beta\} = [G]\{F\})$, here $(\beta = F\ell/AE)$).

Generation of the Stiffness Matrix [K] for Bar Element

It is obtained by discretization of the strain energy expressed in the strain variables. Substituting the strain interpolation function $(\{\varepsilon\} = [Z]\{X\},\ \{X\} = \begin{Bmatrix} u_1 \\ u_2 \end{Bmatrix})$ into Eq. (13-7c) and integration yields the stiffness matrix.

$$U_{stif} = \frac{1}{2}\{X\}^T[K^e]^{bar}\{X\} \tag{13-14}$$

The stiffness matrix for the bar element is obtained as:

$$[K^e]^{bar} = \left(\frac{AE}{\ell}\right)\begin{bmatrix} 1 & -1 \\ -1 & 1 \end{bmatrix} \tag{13-15a}$$

The stiffness matrix $[K^e]^{bar}$ is a (2×2) symmetrical matrix.

The equilibrium between nodal forces (q_1 and q_2) and nodal displacement is established through the stiffness matrix $[K^e]^{bar}$ as

$$\begin{Bmatrix} q_1 \\ q_2 \end{Bmatrix} = \left(\frac{AE}{\ell}\right)\begin{bmatrix} 1 & -1 \\ -1 & 1 \end{bmatrix}\begin{Bmatrix} u_1 \\ u_2 \end{Bmatrix} \tag{13-16}$$

The elemental stiffness matrix could be derived from IFM relations: deformation displacement relation $\{\beta\}^e = [B^e]^T\{X\})$, force deformation relation $(\{\beta^e\} = [G^e]\{F\})$, and the EE $([B^e]\{F\} = \{P\})$. Elimination of deformation and force in favor of displacement yields $([B^e][G^e]^{-1}[B^e]^T\{X\} = [K^e]\{X\} = \{P\})$. The stiffness matrix becomes $([K^e] = [B^e][G^e]^{-1}[B^e]^T)$. For the bar element the stiffness matrix becomes

$$[K^e]^{bar} = \begin{bmatrix} -1 \\ 1 \end{bmatrix} \left[\frac{\ell}{AE}\right]^{-1} [-1 \quad 1] = \left(\frac{AE}{\ell}\right) \begin{bmatrix} 1 & -1 \\ -1 & 1 \end{bmatrix} \tag{13-15b}$$

The stiffness matrices in Eq. (13-15*b*) is identical to that in Eq. (13-15*a*).

Rectangular Membrane Element

The rectangular element with spans $2a$ and $2b$ and thickness t with the origin of (x, y) coordinate system at the centroid is shown in Fig. 13-4*a*. It has four nodes (1, 2, 3, 4). Five internal forces (F_1, F_2, F_3, F_4, F_5) are considered its force unknowns. It has eight nodal forces ($q_1, q_2, \ldots, q_8$) as shown in Fig. 13-4*b*. The EE matrix $[B^e]^{mem}$ of dimension (8×5) link the eight nodal forces $\{q\}$ to the five internal forces $\{F\}$. The element has eight nodal displacements ($X_1, X_2, \ldots, X_8$) as shown in Fig. 13-4*c*. The displacement functions (u and v) used to generate the element matrices are defined in terms of eight nodal displacements $\{X\}$ as follows.

$$u(x,y) = \frac{1}{4}\left\{\left(1-\frac{x}{a}\right)\left(1-\frac{y}{b}\right)X_1 + \left(1+\frac{x}{a}\right)\left(1-\frac{y}{b}\right)X_3 + \left(1+\frac{x}{a}\right)\left(1+\frac{y}{b}\right)X_5 + \left(1-\frac{x}{a}\right)\left(1+\frac{y}{b}\right)X_7\right\} \tag{13-17a}$$

$$v(x,y) = \frac{1}{4}\left\{\left(1-\frac{x}{a}\right)\left(1-\frac{y}{b}\right)X_2 + \left(1+\frac{x}{a}\right)\left(1-\frac{y}{b}\right)X_4 + \left(1+\frac{x}{a}\right)\left(1+\frac{y}{b}\right)X_6 + \left(1-\frac{x}{a}\right)\left(1+\frac{y}{b}\right)X_8\right\} \tag{13-17b}$$

The displacement functions are linear polynomials in x and y coordinates. The displacement functions at the nodes yield the nodal displacements $\{X\}$. The force interpolation is selected in terms of five force unknowns ($F_1, F_2, \ldots, F_5$).

$$N_x = F_1 + F_4\frac{y}{b}$$

$$N_y = F_2 + F_5\frac{x}{a}$$

$$N_{xy} = F_3 \tag{13-18}$$

The membrane normal forces (N_x and N_y) are linear functions of y and x, respectively. The shear force N_{xy} is uniform across the element domain.

Elemental Equilibrium Matrix $[B^e]^{mem}$

The elemental equilibrium matrix is obtained by discretizing the strain energy expression for the membrane ($U_p{}^{mem}$), given by Eq. (13-8*a*). The procedure to generate the (8×5) EE matrix $[B^e]^{mem}$ is identical to that illustrated for bar element. The matrix follows

$$[B^e]^{mem} = \begin{bmatrix} -b & b/3 & 0 & 0 & -a \\ 0 & 0 & -a & a/3 & -b \\ b & -b/3 & 0 & 0 & -a \\ 0 & 0 & -a & -a/3 & b \\ b & b/3 & 0 & 0 & a \\ 0 & 0 & a & a/3 & b \\ -b & -b/3 & 0 & 0 & a \\ 0 & 0 & a & -a/3 & -b \end{bmatrix} \tag{13-19}$$

The matrix establishes equilibrium between the eight nodal forces $\{q\}$ and the five internal forces $\{F\}$ as $\{q\} = [B^e]^{mem}\{F\}$. It is a function of the element dimensions (a and b) but it is independent of element material and thickness.

Elemental Flexibility Matrix $[G^e]^{mem}$

The elemental flexibility matrix is obtained by discretizing the complementary strain energy expression for the membrane ($U_c{}^{mem}$), given by Eq. (13-8b). The procedure to generate the (5×5) symmetrical flexibility matrix $[G^e]^{mem}$ is identical to that illustrated for the bar element. The matrix follows

$$[G^e]^{mem} = \left(\frac{4ab}{Et}\right) \begin{bmatrix} 1 & 0 & -\nu & 0 & 0 \\ 0 & 1/3 & 0 & 0 & 0 \\ -\nu & 0 & 1 & 0 & 0 \\ 0 & 0 & 0 & 1/3 & 0 \\ 0 & 0 & 0 & 0 & 2(1+\nu) \end{bmatrix} \tag{13-20}$$

The (5×5) symmetrical flexibility matrix establishes relation between the five deformations $\{\beta\}$ and the five forces $\{F\}$ as $\{\beta\} = [G^e]^{mem}\{F\}$. It is a function of the element dimensions (a, b, t) and material properties; E being the Young's modulus and Poisson's ratio ν.

Generation of the Stiffness Matrix $[K^e]^{mem}$ for Membrane Element

It is obtained by discretization of the strain energy expressed in the strain or the displacement variables given by Eq. (13-8c) and the displacement functions given by Eq. (13-17). The (8×8) symmetrical matrix for the membrane element is as follows.

$$[K^e]^{mem} = \frac{Et}{24(1-\nu^2)} \times$$

$$\begin{bmatrix} 8\beta+4\alpha(1-\nu) & 3(1+\nu) & -8\beta+2\alpha(1-\nu) & 3(3\nu-1) & -4\beta-2\alpha(1-\nu) & -3(1+\nu) & 4\beta-4\alpha(1-\nu) & -3(3\nu-1) \\ & 8\alpha+4\beta(1-\nu) & -3(3\nu-1) & 4\alpha-4\beta(1-\nu) & -3(1+\nu) & -4\alpha-2\beta(1-\nu) & 3(3\nu-1) & -8\alpha-2\beta(1-\nu) \\ & & 8\beta+4\alpha(1-\nu) & -3(1+\nu) & 4\beta-4\alpha(1-\nu) & 3(3\nu-1) & -4\beta-2\alpha(1-\nu) & 3(1+\nu) \\ & & & 8\alpha+4\beta(1-\nu) & -3(3\nu-1) & -8\alpha+2\beta(1-\nu) & 3(1+\nu) & -4\alpha-2\beta(1-\nu) \\ & & & & 8\beta+4\alpha(1-\nu) & 3(1+\nu) & -8\beta+2\beta(1-\nu) & 3(3\nu-1) \\ & & \text{SYM} & & & 8\alpha+4\beta(1-\nu) & -3(3\nu-1) & 4\alpha-4\beta(1-\nu) \\ & & & & & & 8\beta+4\alpha(1-\nu) & -3(1+\nu) \\ & & & & & & & 8\alpha+4\beta(1-\nu) \end{bmatrix}$$

$$\text{here,} \quad \alpha = \frac{1}{\beta} = \frac{a}{b} \tag{13-21}$$

The stiffness matrix is a function of the element dimensions (a, b, t) and material properties, Young's modulus (E), and Poisson's ratio ν. The equilibrium between the eight nodal forces $\{q\}$ and the eight nodal displacements $\{X\}$ is established through the stiffness matrix $[K^e]^{mem}$ as ($\{q\} = [K^e]^{mem}\{X\}$), which is much more complex than the EE ($\{q\} = [B^e]^{mem}\{F\}$). Even though the stiffness and flexibility convey opposite meaning the (8×8) stiffness matrix $[K^e]^{mem}$ is not the inverse of the (5×5) flexibility matrix $[G^e]]^{mem}$. The IFM, IFMD, and the stiffness method are illustrated for a few examples.

EXAMPLE 13-1: A Fixed Bar

Integrated Force Method

Finite element analysis using IFM is illustrated considering the fixed bar, shown in Fig. 13-2*a* as an example. The bar has a length of $3L$ with clamped boundaries and it is made of steel; with Young's modulus E. It is subjected to loads (P_2 and P_1) at one-third and two-thirds span locations. It is idealized by three finite elements consisting of a central element and two boundary elements of equal lengths as shown in Fig. 13-5*a*. The cross-sectional areas (A) of the boundary elements are equal, and the area of the central element is $2A$. The three elements with their axes (x_1 and y_1), (x_2 and y_2), and (x_3 and y_3), respectively, are shown in Fig. 13-5*b*. The axes associated with elements, here (x_1 and y_1), (x_2 and y_2), and (x_3 and y_3), are called the elemental or local axes. There are as many sets of local axes as there are elements; here there are three sets of local axes. The axis (x, y) used to define the structure shown in Fig. 13-5*c* is called the system or the global axis. For this problem the orientation of the local axes (x_1 and y_1), (x_2 and y_2), and (x_3 and y_3), and the global axis (x, y) are identical, because the local axes (x_1, x_2, and x_3) and the global axis (x) are horizontal, while (y_1, y_2, and y_3) and the global axis (y) are vertical. For such a situation the distinction between the local and global axes has little significance. A coordinate transformation has to be performed when the orientation of the local and global axes are different. This will be illustrated later during the solution of the single-bay truss shown in Fig. 13-2*b*.

The IFM solution requires three matrices: $[B]$, $[G]$, and $[C]$. The equilibrium matrix $[B]$ and the flexibility matrix $[G]$ are assembled from their elemental matrices. The compatibility matrix $[C]$ is obtained by eliminating displacements from the deformation displacement relations. The force and displacement degrees of freedom of the structure marked in Fig. 13-5 are as follows:

1. Force degrees of freedom: Each bar element is idealized by one internal force, or the structure has three force degrees of freedom ($^n fof = 3$; F_1, F_2, F_3).
2. Displacement degrees of freedom: The structure has two displacement degrees of freedom, one at each of its two free nodes, 2 and 3 ($^m dof = 2$; X_1, X_2). For the IFM analysis, the structure is designated as bar (3, 2). It has $m = 2$ equilibrium equations and ($r = n - m = 1$) compatibility condition.

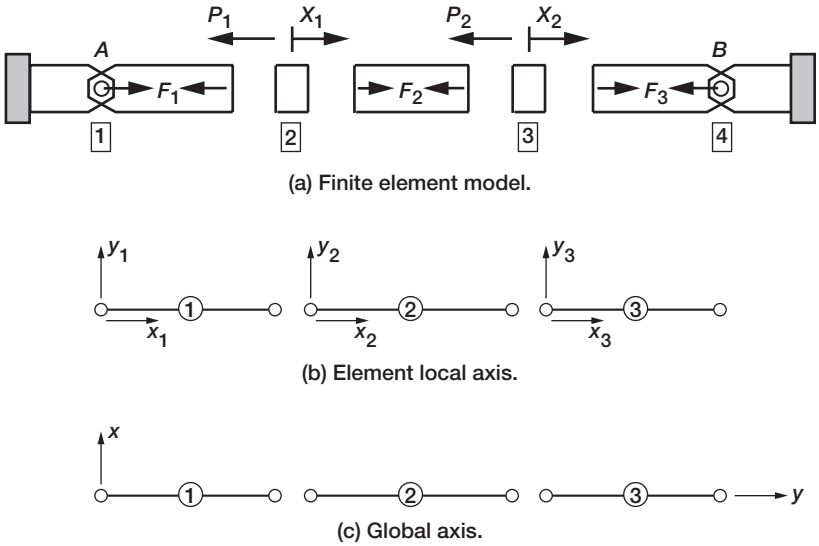

FIGURE 13-5 *Solution of the fixed bar.*

Equilibrium Equations

The two-system EE of the structure are assembled from the three elemental EE. Bar 1 (refer to Fig. 13-5*a*) is clamped at node 1 and it has displacement (X_1) at node 2. Its two *dof* are (0 and X_1). It has one force unknown (F_1). The EE matrix is labelled along the row with *dof* and along the column with *fof*.

$$\begin{array}{cc} & dof \\ & \downarrow \qquad 1 \leftarrow fof \\ \left[B^{1e}\right] = & \begin{array}{c} 0 \\ 1 \end{array} \begin{bmatrix} -1 \\ 1 \end{bmatrix} \end{array} \tag{13-21a}$$

Bar 2 has two free nodes. Its two *dof* are (X_1 and X_2). It has one force unknown (F_2).

$$\begin{array}{cc} & 2 \\ \left[B^{2e}\right] = & \begin{array}{c} 1 \\ 2 \end{array} \begin{bmatrix} -1 \\ 1 \end{bmatrix} \end{array} \tag{13-21b}$$

Bar 3 has one free node and one fixed node. Its two *dof* are (X_2 and 0). It has one force unknown (F_3).

$$
\begin{array}{cc} & 3 \\ \left[B^{3e}\right] = & \begin{array}{c} 2 \\ 0 \end{array} \begin{bmatrix} -1 \\ 1 \end{bmatrix} \end{array} \tag{13-21c}
$$

The (2×3) system equilibrium matrix $[B]$ is obtained by following the standard finite element assembly technique. The three elemental matrices are stacked column-wise. The first column is the first matrix $[B^{1e}]$ for the first bar. The second column is the matrix $[B^{2e}]$ for bar 2. The third column is the matrix $[B^{3e}]$ for bar 3. The assembly ignores the suppressed *dof*.

$$
\begin{array}{cc} & \begin{array}{ccc} 1 & 2 & 3 \end{array} \leftarrow fof \\ [B] = \begin{array}{c} 1 \\ 2 \end{array} & \begin{bmatrix} -1 & 1 & 0 \\ 0 & -1 & 1 \end{bmatrix} \\ \uparrow & \\ dof & \end{array} \tag{13-21d}
$$

and the two EE can be written as

$$
\begin{bmatrix} 1 & -1 & 0 \\ 0 & 1 & -1 \end{bmatrix} \begin{Bmatrix} F_1 \\ F_2 \\ F_3 \end{Bmatrix} = \begin{Bmatrix} -P_1 \\ -P_2 \end{Bmatrix} \tag{13-21e}
$$

The first row is the EE along the displacement direction X_1. The second row is the EE along the displacement direction X_2.

Flexibility Matrix

The elemental flexibility matrix for the bar is a (1×1) matrix $[G^e] = [L/AE]$. The flexibility matrix $[G]$ for the structure is obtained by concatenating the elemental matrices along the diagonal as follows:

$$
[G] = \begin{bmatrix} \frac{L}{A_1 E} & & \\ & \frac{L}{A_2 E} & \\ & & \frac{L}{A_1 E} \end{bmatrix} \tag{13-22}
$$

Compatibility Conditions

The first step in obtaining the CC is to establish the DDR $(\{\beta\} = [B]^T\{X\})$. The three-component deformation vector $\{\beta\}$ corresponds to the three elemental expansions due to forces F_1, F_2, and F_3, respectively. This deformation vector is related to the displacements (X_1, X_2) by the DDR $(\{\beta\} = [B]^T\{X\})$, which has the following form:

$$\begin{Bmatrix} \beta_1 \\ \beta_2 \\ \beta_3 \end{Bmatrix} = \begin{bmatrix} 1 & 0 \\ -1 & 1 \\ 0 & -1 \end{bmatrix} \begin{Bmatrix} X_1 \\ X_2 \end{Bmatrix} \tag{13-23a}$$

The two displacements are eliminated from the three DDR to obtain one CC ($r = n - m = 3 - 2 = 1$). In terms of deformations, the CC, $[C]\{\beta\} = \{0\}$, has the following explicit form:

$$\begin{bmatrix} 1 & 1 & 1 \end{bmatrix} \begin{Bmatrix} \beta_1 \\ \beta_2 \\ \beta_3 \end{Bmatrix} = \{0\} \tag{13-23b}$$

The CC constrains the total elongation of the bars to zero ($\beta_1 + \beta_2 + \beta_3 = 0$). For this simple case, the deformation compatibility condition could have been asserted by observation.

From Eq. (13-23*b*), the compatibility matrix $[C]$ is obtained as

$$[C] = \begin{bmatrix} 1 & 1 & 1 \end{bmatrix} \tag{13-23c}$$

The correctness of the matrix $[C]$ can be ascertained from its null property $[B][C]^T = 0$, here

$$\begin{bmatrix} 1 & -1 & 0 \\ 0 & 1 & -1 \end{bmatrix} \begin{bmatrix} 1 \\ 1 \\ 1 \end{bmatrix} = \begin{bmatrix} 0 \\ 0 \end{bmatrix} \tag{13-23d}$$

From the definition of matrices $[B]$, $[C]$, $[G]$, and ($\{\delta R\} = \{0\}$), the final governing IFM equation ($[S]\{F\} = \{P^*\}$) is assembled as

$$\begin{bmatrix} 1 & -1 & 0 \\ 0 & 1 & -1 \\ 1 & A_1/A_2 & 1 \end{bmatrix} \begin{Bmatrix} F_1 \\ F_2 \\ F_3 \end{Bmatrix} = \begin{Bmatrix} -P_1 \\ -P_2 \\ 0 \end{Bmatrix} \tag{13-24}$$

The CC or the third equation in Eq. (13-24) is scaled by multiplying it with the factor (E/L). The scaling process makes the governing IFM matrix $[S]$ dimensionless. Solution of Eq. (13-24) yields the forces from which displacements are calculated by back-substitution (from Eq. 13-2).

Numerical parameters of the example are as follows:

1. Lengths of the bars: $\ell_1 = \ell_2 = \ell_3 = 10\,\text{in.}$
2. Cross-sectional areas: $A_1 = A_3 = 1\,\text{in.}^2$ and $A_2 = 2\,\text{in.}^2$
3. Modulus of elasticity: $E = 30{,}000\,\text{ksi}$

The external loads are $P_1 = -10$ kips, $P_2 = -20$ kips, and $\delta R = 0$.

Internal forces are

$$\begin{Bmatrix} F_1 \\ F_2 \\ F_3 \end{Bmatrix} = \begin{Bmatrix} 14 \\ 4 \\ -16 \end{Bmatrix}_{\text{kip}} \tag{13-25a}$$

Nodal displacements can be calculated from Eq. (13-2) as

$$\begin{Bmatrix} X_1 \\ X_2 \end{Bmatrix} = \begin{Bmatrix} 4.67 \\ 5.33 \end{Bmatrix}_{\times 10^{-3}\ \text{in.}} \tag{13-25b}$$

Dual Integrated Force Method

In IFMD the $[D]_{ifmd}$ matrix in the equation ($[D]_{ifmd}\{X\} = \{P\}$) is assembled from the elemental matrices. The assembly of the dual matrix $[D]_{ifmd}$ is illustrated here by considering the fixed bar with three elements as an example. Let the elemental equilibrium and flexibility matrices of the structure be represented by $[B^{1e}]$, $[B^{2e}]$, $[B^{3e}]$, and $[G^{1e}]$, $[G^{2e}]$, $[G^{3e}]$, respectively. The assembled equilibrium matrix $[B]$ of the structure can be written as

$$[B] = \left[B^{1e} \middle| B^{2e} \middle| B^{3e} \right] \tag{13-26a}$$

The flexibility matrix $[G]$ is a concatenation of elemental matrices along the diagonal

$$[G] = \begin{bmatrix} [G^{1e}] & & \\ & [G^{2e}] & \\ & & [G^{3e}] \end{bmatrix} \tag{13-26b}$$

By using elemental equilibrium and flexibility matrices, we can define the following elemental pseudostiffness matrix

$$[D]_{ifmd-e} = [B][G]^{-1}[B]^T \tag{13-26c}$$

By substituting Eqs. (13-26*a*) and (13-26*b*) into Eq. (13-26*c*) and expanding in terms of elemental matrices, we obtain

$$[D]_{ifmd-e} = \left[\left[B^{1e}\right]\left[G^{1e}\right]^{-1}\left[B^{1e}\right]^T \vdots \left[B^{2e}\right]\left[G^{2e}\right]^{-1}\left[B^{2e}\right]^T \vdots \left[B^{3e}\right]\left[G^{3e}\right]^{-1}\left[B^{3e}\right]^T \right]$$

We can write the system matrix of the IFMD as

$$[D]_{ifmd} = \left[D_{ifmd-e1} + D_{ifmd-e2} + D_{ifmd-e3} \right] \tag{13-26d}$$

The pseudostiffness matrix $[D]_{ifmd}$ for the finite element model can be assembled from the equivalent elemental matrices by following the standard stiffness assembly technique. The formulation of the mechanical nodal load vector $\{P\}$ also follows the regular stiffness method assembly procedure.

The three-bar example used earlier to illustrate the IFM is used again to illustrate the IFMD solution process.

Step 1—Generate the Elemental Pseudostiffness Matrices and Load Vectors

Equilibrium matrix:

$$[B^e] = \begin{bmatrix} -1 \\ 1 \end{bmatrix} \tag{13-27a}$$

Inverse of flexibility matrix:

$$[G^e]^{-1} = \left[\frac{AE}{\ell}\right] \tag{13-27b}$$

Pseudostiffness matrix:

$$[D]_{ifmd-e} = [B^e][G^e]^{-1}[B^e]^T = \left(\frac{AE}{\ell}\right)\begin{bmatrix} 1 & -1 \\ -1 & 1 \end{bmatrix} \tag{13-27c}$$

Step 2—Formulate the Governing Equation for the Problem by Using Elemental Matrices and Vectors

The elemental matrices are labelled along the column and rows with *dof*. For element 1 the *dof* is (0 1) and it is identical to that of the EE matrix in forces given by (Eq. 13-21*a*). This is because both represent the same EE. Earlier it was written in forces and now it is written in terms of the displacements. For element 2 the *dof* is (1 2). For element 3 the *dof* is (2 0).

$$\begin{array}{c} dof \rightarrow \\ \downarrow \end{array}$$

$$[D]_{ifm} = \underbrace{\begin{array}{c} \\ \begin{bmatrix} 0 \\ 1 \end{bmatrix} \end{array}\begin{array}{c} \begin{array}{cc} 0 & 1 \end{array} \\ \left[\left(\frac{AE}{\ell}\right)\begin{bmatrix} 1 & -1 \\ -1 & 1 \end{bmatrix}\right] \end{array}}_{\text{Element 1}} + \underbrace{\begin{array}{c} \\ \begin{bmatrix} 1 \\ 2 \end{bmatrix} \end{array}\begin{array}{c} \begin{array}{cc} 1 & 2 \end{array} \\ \left\{\left(\frac{AE}{\ell}\right)\begin{bmatrix} 1 & -1 \\ -1 & 1 \end{bmatrix}\right\} \end{array}}_{\text{Element 2}} + \underbrace{\begin{array}{c} \\ \begin{bmatrix} 2 \\ 0 \end{bmatrix} \end{array}\begin{array}{c} \begin{array}{cc} 2 & 0 \end{array} \\ \left\{\left(\frac{AE}{\ell}\right)\begin{bmatrix} 1 & -1 \\ -1 & 1 \end{bmatrix}\right\} \end{array}}_{\text{Element 3}} \left.\begin{Bmatrix} X_1 \\ X_2 \end{Bmatrix}\right] \tag{13-28a}$$

Equation (13-28*a*) can be simplified for the parameters of the problem ($A_1 = A_2 = 1.0\,\text{in.}^2$ and $A_3 = 2.0\,\text{in.}^2$) to obtain the following equations of the dual method:

$$\left(\frac{E}{\ell}\right)\begin{bmatrix} 3 & -2 \\ -2 & 3 \end{bmatrix}\begin{Bmatrix} X_1 \\ X_2 \end{Bmatrix} = \begin{Bmatrix} 10 \\ 20 \end{Bmatrix} \tag{13-28b}$$

Solution of Eq. (13-28*b*) yields the following values for the displacements for the three load cases:

$$\begin{Bmatrix} X_1 \\ X_2 \end{Bmatrix} = \begin{Bmatrix} 0.4667 \\ 0.5333 \end{Bmatrix}_{\text{in.}} \tag{13-29a}$$

We can calculate the forces from formula ($\{F\} = [G]^{-1}[B]^T\{X\}$) given by Eq. (13-5) as

$$\begin{Bmatrix} F_1 \\ F_2 \\ F_3 \end{Bmatrix}_{\text{kip}} = \begin{Bmatrix} 14 \\ 4 \\ -16 \end{Bmatrix}_{\text{kip}} \tag{13-29b}$$

The solution generated by the dual IFMD agrees with that of the primal IFM. Both the primal IFM and IFMD are based on identical sets of equations. These are the equilibrium equations, the compatibility conditions, the deformation force relations, and the deformation displacement relations. Only the solution order is changed. That is, in the primal IFM, forces are determined first and then displacements are back-calculated. In the IFMD, a reverse order is followed; that is, displacements are determined first and then forces are back-calculated. Therefore, the primal IFM and its dual IFMD yield identical solutions. The IFMD can be considered to be the true displacement method. The governing equations of the IFMD and the popular stiffness method are symmetrical, but the coefficients of the stiffness matrix and that of the dual method pseudostiffness matrix can differ in magnitude for plates and shells. The IFMD does not use the compatibility condition in explicit terms ($[C]\{\beta\} = \{0\}$). But this is satisfied automatically because ($\{\beta\} = [B]^T\{X\}$). On substitution ($[C]\{\beta\} = [C][B]^T\{X\} = \{0\}$) because ($[C][B]^T = [0]$).

Stiffness Method

The key stiffness equation ($[K]\{X\} = \{P\}$) and the IFMD governing equation ($[D]\{X\} = \{P\}$) become identical when the two matrices become equal ($[K] = [D]$). Generation of both $[K]$ and $[D]$ follows identical assembly technique. The two matrices can become equal provided the elemental matrices are identical, and this is the case for a bar element; see Eq. (13-15*b*) and Eq. (13-27*c*). In other words, Eqs. (13-28*a*), (13-28*b*), and (13-29) of IFMD are equally applicable to the stiffness method and these equations yield the nodal displacement $\{X\}$. In the stiffness method the calculation of the internal force from the displacement $\{X\}$ is somewhat different than that of IFMD because of the nonavailability of the EE matrix $[B]$ and flexibility matrix $[G]$. In other words, IFMD formula ($\{F\} = [G]^{-1}[B]^T\{X\}$) cannot be used.

In the stiffness method, strain is calculated from the displacement and then stress and force are calculated.

$$\varepsilon = \frac{\partial u}{\partial x} = \begin{bmatrix} \frac{-1}{\ell} & \frac{1}{\ell} \end{bmatrix} \begin{Bmatrix} u_1 \\ u_2 \end{Bmatrix} = \frac{u_2 - u_1}{\ell}$$

$$\sigma = E\varepsilon = \left(\frac{E}{\ell}\right)(u_2 - u_1)$$

$$F = A\sigma = \frac{AE}{\ell}(u_2 - u_1) \tag{13-30a}$$

For bar 1

$$\frac{AE}{\ell} = \frac{1 \times 30{,}000}{10} = 3000$$

$$u_2 = x_1 = 0.4667 \times 10^{-2}$$

$$u_1 = 0$$

$$F_1 = 3000 \times 4.667 \times 10^{-3} = 14.0\,\text{kip} \tag{13-30b}$$

For bar 2

$$\frac{AE}{\ell} = 6000$$

$$u_1 = 5.333 \times 10^{-3}$$

$$u_2 = 4.667 \times 10^{-3}$$

$$F_2 = 6000\ (u_2 - u_1) = 4.0\,\text{kip} \tag{13-30c}$$

For bar 3

$$u_1 = 5.333 \times 10^{-3}$$

$$u_2 = 0$$

$$F_3 = 3000\ (u_2 - u_1) = -16.0\,\text{kip} \tag{13-30d}$$

EXAMPLE 13-2: Single-Bay Truss

A square aluminum truss with a length of 20 in. and a Young's modulus E of 10×10^6 psi is depicted in Fig. 13-2*c*. The areas of both diagonal bars are equal to $1/\sqrt{2}$ in.^{2}; all other bars have an area of 1 in.^{2}. Solution is obtained for a mechanical load of 1000 lbf at node 1 along the y-direction. The finite element model with six bar elements and four nodes is shown in Fig. 13-6*a*. Nodes 1 and 2 are free with displacements (X_1, X_2, X_3, and X_4) and nodes 3 and 4 are fully suppressed.

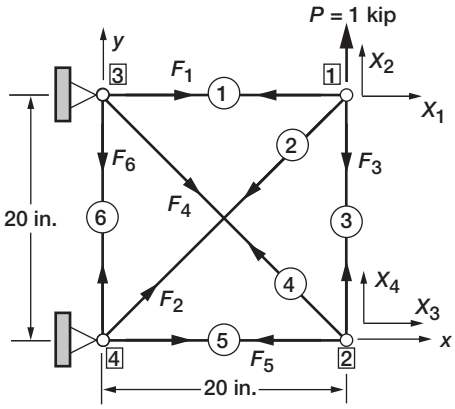

FIGURE 13-6 *Finite element model.*

IFM Solution

The truss has six bars and six force unknowns: (F_1, F_2, F_3, F_4, F_5, and F_6); and $n = 6$. It has four displacement unknowns, and $m = 4$. The truss is two-degrees indeterminate ($r = n - m = 2$). Its EE matrix $[B]$ has dimension (4×6) and it is assembled from the six elemental matrices to obtain four EE ($[B]\{F\} = \{P\}$). The local x-axis can be directed from low to high node number along the bar length. It can also be defined from a suppressed node to a free node. The local y-axis is perpendicular to the x-axis and follows the right-hand rule. Selection of a local axis has no effect on the response. This problem requires coordinate transformation because the orientation of the local coordinates is different from the global coordinates.

The global coordinates (x_g, y_g) and local coordinates (x_ℓ, y_ℓ) for a bar with an orientation θ are shown in Fig. 13-7. The equilibrium matrix can be transformed in the global coordinates (x_g, y_g) by expressing the local displacements (u_1 and u_2) in terms of the nodal global displacement as shown in Fig. 13-7. In this figure, (X_1, X_2) and (X_3, X_4) represent the global nodal displacements at node 1 and 2, respectively. The bar orientation (local x_ℓ-axis) with respect to the global axes (x_g, y_g) is θ. Let us define ℓ and m as the direction cosines (for the bar *1–2*) of the angles between line *1–2* and the x_g- and y_g-axis, respectively. The nodal displacements (u_1, u_2) can be written as

$$\begin{Bmatrix} u_1 \\ u_2 \end{Bmatrix} = \begin{bmatrix} \ell & m & 0 & 0 \\ 0 & 0 & \ell & m \end{bmatrix} \begin{Bmatrix} X_1 \\ X_2 \\ X_3 \\ X_4 \end{Bmatrix} = [\lambda]\{X\} \tag{13-31a}$$

The matrix $[\lambda]$ is referred to as the transformation matrix.

The bar displacement in terms of nodal displacements (X_1, X_2, X_3, X_4) can be written as

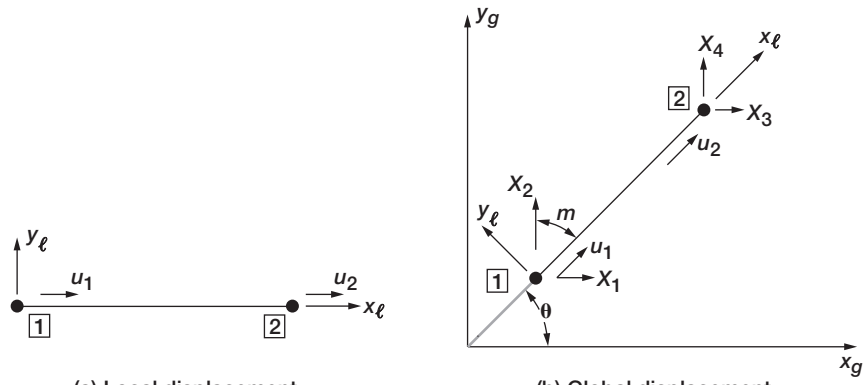

(a) Local displacement. (b) Global displacement.

FIGURE 13-7 *Local and global displacement.*

$$\{u\} = [N]\begin{Bmatrix} u_1 \\ u_2 \end{Bmatrix} = [N][\lambda]\{X\}$$

or

$$[Z] = [L][N][\lambda] \tag{13-31b}$$

$$[\lambda] = \begin{bmatrix} \ell & m & 0 & 0 \\ 0 & 0 & \ell & m \end{bmatrix} \tag{13-31c}$$

The equilibrium matrix $[B_g^e]$ in the global nodal displacement $\{X\}$ can be written as

$$\left[B_g^e\right] = \int \left[\lambda^T\right][N][L][Y]dv$$

or

$$\underset{(4\times1)}{\left[B_g^e\right]} = \underset{(4\times2)}{\left[\lambda^T\right]}\underset{(2\times1)}{\left[B^e\right]} \tag{13-32}$$

The equilibrium matrix for a bar element in global coordination is a (4×1) matrix that corresponds to the four global displacements (X_1, X_2, X_3, X_4), as follows

$$\left[B_g^e\right] = \begin{bmatrix} -\ell \\ -m \\ \ell \\ m \end{bmatrix} \tag{13-33}$$

The equilibrium matrix $[B]$ in IFM has to be written in global coordinates. Thus, the matrix $[B_g^e]$ given in Eq. (13-33) should be used to assemble the system equilibrium matrix $[B]$. The equilibrium matrix ($[B]_i$) for the ith bar element with internal force (F_i) and direction cosines (ℓ, m) can be written as

$$[B]_i = \begin{bmatrix} -\ell \\ -m \\ \ell \\ m \end{bmatrix}_i F_i \tag{13-34}$$

The EE for the six bars are as follows

$$[B]_1 = \begin{array}{c} dof \downarrow \\ 0 \\ 0 \\ 1 \\ 2 \end{array} \begin{bmatrix} -1 \\ 0 \\ 1 \\ 0 \end{bmatrix} F_1 \qquad [B]_2 = \begin{array}{c} 0 \\ 0 \\ 1 \\ 2 \end{array} \begin{bmatrix} -1/\sqrt{2} \\ -1/\sqrt{2} \\ 1/\sqrt{2} \\ 1/\sqrt{2} \end{bmatrix} F_2 \qquad [B]_3 = \begin{array}{c} 1 \\ 2 \\ 3 \\ 4 \end{array} \begin{bmatrix} 0 \\ 1 \\ 0 \\ -1 \end{bmatrix} F_3$$

$$\ell = 1, \; m = 0 \qquad \ell = m = 1/\sqrt{2} \qquad \ell = 0, \; m = -1$$

$$[B]_4 = \begin{array}{c} 0 \\ 0 \\ 3 \\ 4 \end{array} \begin{bmatrix} -1/\sqrt{2} \\ 1/\sqrt{2} \\ 1/\sqrt{2} \\ -1/\sqrt{2} \end{bmatrix} F_4 \qquad [B]_5 = \begin{array}{c} 0 \\ 0 \\ 3 \\ 4 \end{array} \begin{bmatrix} -1 \\ 0 \\ 1 \\ 0 \end{bmatrix} F_5 \qquad [B]_6 = \begin{array}{c} 0 \\ 0 \\ 0 \\ 0 \end{array} \begin{bmatrix} 0 \\ 1 \\ 0 \\ -1 \end{bmatrix} F_6 \tag{13-35a}$$

$$\ell = 1/\sqrt{2}, \; m = -1/\sqrt{2} \qquad \ell = 1, \; m = 0 \qquad \ell = 0, \; m = -1$$

The assembly of the elemental EE matrices along the displacements (X_1, X_2, X_3, X_4) yields the following EE:

$$\begin{bmatrix} 1 & 1/\sqrt{2} & 0 & 0 & 0 & 0 \\ 0 & 1/\sqrt{2} & 1 & 0 & 0 & 0 \\ 0 & 0 & 0 & 1/\sqrt{2} & 1 & 0 \\ 0 & 0 & -1 & -1/\sqrt{2} & 0 & 0 \end{bmatrix} \begin{Bmatrix} F_1 \\ F_2 \\ F_3 \\ F_4 \\ F_5 \\ F_6 \end{Bmatrix} = \begin{Bmatrix} 0 \\ 1000 \\ 0 \\ 0 \end{Bmatrix} \tag{13-35b}$$

The sixth column is null because the sixth bar (F_6) is connected to fully restrained nodes 3 and 4, as shown in Fig. 13-6a. In IFM, null columns are accepted in the equilibrium equations of indeterminate structures without any adverse effects.

Compatibility Conditions

The six forces are expressed in terms of four EE, thus there are two CC. The CC are obtained first by writing the six DDR and then by eliminating the four displacements $\{X\}$ from the DDR. The DDR ($\{\beta\} = [B]\{X\}$) for the problem can be written as

$$\begin{aligned} \beta_1 &= X_1 & \beta_4 &= \frac{X_3 - X_4}{\sqrt{2}} \\ \beta_2 &= \frac{X_1 + X_2}{\sqrt{2}} & \beta_5 &= X_3 \\ \beta_3 &= X_2 - X_4 & \beta_6 &= 0 \end{aligned} \tag{13-36}$$

Elimination of the four displacements ($X_1, X_2, \ldots, X_4$) from the six DDR yields the two compatibility conditions in six deformations:

$$\begin{bmatrix} 0 & 0 & 0 & 0 & 0 & 1 \\ 1 & -2\sqrt{2} & 1 & -2\sqrt{2} & 1 & 0 \end{bmatrix} \begin{Bmatrix} \beta_1 \\ \beta_2 \\ \beta_3 \\ \beta_4 \\ \beta_5 \\ \beta_6 \end{Bmatrix} = 0 \tag{13-37}$$

The first CC in Eq. (13-37) (that is, $\beta_6 = 0$) corresponds to the sixth element, with the null sixth column in the EE given by Eq. (13-35*b*).

In the absence of temperature effect, the six deformations are related to member forces through the flexibility coefficients as follows:

$$\begin{aligned} \beta_1 &= \left(\frac{\ell F_1}{AE}\right)_1 = \frac{20F_1}{E} \\ \beta_2 &= \frac{40F_2}{E} \\ \beta_3 &= \frac{20F_3}{E} \\ \beta_4 &= \frac{40F_1}{E} \\ \beta_5 &= \frac{20F_5}{E} \\ \beta_6 &= \frac{20F_6}{E} \end{aligned} \tag{13-38a}$$

The flexibility matrix $[G]$ from the FDR $\{\beta\} = [G]\{F\}$ can be formed from the diagonal concatenation of the flexibility coefficients as

$$[G] = \frac{1}{E}\begin{bmatrix} 20 & & & & & \\ & 40 & & & & \\ & & 20 & & & \\ & & & 40 & & \\ & & & & 20 & \\ & & & & & 20 \end{bmatrix} \tag{13-38b}$$

The CC, $[C][G]\{F\} = \{\delta R\}$, are obtained in terms of forces by eliminating deformations between the CC in deformation and the FDR as

$$\frac{20}{E}\begin{bmatrix} 0 & 0 & 0 & 0 & 0 & 1 \\ 1 & -2\sqrt{2} & 1 & -2\sqrt{2} & 1 & 0 \end{bmatrix}\begin{Bmatrix} F_1 \\ F_2 \\ F_3 \\ F_4 \\ F_5 \\ F_6 \end{Bmatrix} = \{0\} \tag{13-39}$$

IFM Governing Equations ($[S]\{F\}=\{P\}^*$)

The IFM governing equation is obtained by coupling the EE and the CC:

$$\begin{bmatrix} 1 & 1/\sqrt{2} & 0 & 0 & 0 & 0 \\ 0 & 1/\sqrt{2} & 1 & 0 & 0 & 0 \\ 0 & 0 & 0 & 1/\sqrt{2} & 1 & 0 \\ 0 & 0 & -1 & -1/\sqrt{2} & 0 & 0 \\ 0 & 0 & 0 & 0 & 0 & 1 \\ 1 & -2\sqrt{2} & 1 & -2\sqrt{2} & 1 & 0 \end{bmatrix}\begin{Bmatrix} F_1 \\ F_2 \\ F_3 \\ F_4 \\ F_5 \\ F_6 \end{Bmatrix} = \begin{Bmatrix} 0 \\ 1000 \\ 0 \\ 0 \\ 0 \\ 0 \end{Bmatrix} \tag{13-40}$$

Solving the IFM equations yields the forces as

$$\begin{Bmatrix} F_1 \\ F_2 \\ F_3 \\ F_4 \\ F_5 \\ F_6 \end{Bmatrix} = \begin{Bmatrix} -545.5 \\ 771.4 \\ 454.5 \\ -642.8 \\ 454.5 \\ 0.0 \end{Bmatrix}_{\text{lbf}} \tag{13-41a}$$

Displacements back-calculated from the IFM formula ($\{X\} = [J][G]\{F\} + \{\beta\}^0$) are

$$\begin{Bmatrix} X_1 \\ X_2 \\ X_3 \\ X_4 \end{Bmatrix} = \begin{Bmatrix} -1.091 \\ 5.454 \\ 0.909 \\ 4.545 \end{Bmatrix}_{\text{in.}} \times 10^{-3} \tag{13-41b}$$

IFMD and Stiffness Method Matrix for a Bar

The elemental stiffness matrix in global coordinates is identical for both the IFMD and the stiffness method. It is obtained as the product of the equilibrium and flexibility matrices. The flexibility matrix is not changed.

$$\begin{aligned} \left[D_g\right]_{ifmd}^{bar} &= \left[K_g\right]^{bar} = \left[B_g\right]\left[G\right]^{-1}\left[B_g\right]^T \\ &= \begin{bmatrix} -\ell \\ -m \\ \ell \\ m \end{bmatrix} \left[\frac{AE}{\ell}\right] \begin{bmatrix} -\ell & -m & \ell & m \end{bmatrix} \end{aligned}$$

$$\left[D_g\right]_{ifmd}^{bar} = \left[K_g\right]^{bar} = \left(\frac{AE}{L}\right) \begin{bmatrix} \ell^2 & \ell m & -\ell^2 & -\ell m \\ \ell m & m^2 & -\ell m & -m^2 \\ -\ell^2 & -\ell m & \ell^2 & \ell m \\ -\ell m & -m^2 & \ell m & m^2 \end{bmatrix} \tag{13-42}$$

The global stiffness matrix is a (4×4) symmetrical matrix defined in terms of the direction cosines (ℓ and m), area (A), length (L; note: upper case letter is used to avoid confusion with the direction cosine) and Young's modulus E. The six elemental matrices for the six elements with *dof* label are as follows.

$$\underset{(\ell=1,m=0)}{\left[K\right]^{bar1}} = \frac{E}{20} \begin{array}{c} \begin{array}{cccc} 0 & 0 & 1 & 2 \end{array} \\ \begin{bmatrix} 1 & 0 & -1 & 0 \\ 0 & 0 & 0 & 0 \\ -1 & 0 & 1 & 0 \\ 0 & 0 & 0 & 0 \end{bmatrix} \end{array} \begin{array}{c} \\ 0 \\ 0 \\ 1 \\ 2 \end{array} \tag{13-43a}$$

$$\underset{\left(\ell=m=\frac{1}{\sqrt{2}}\right)}{\left[K\right]^{bar2}} = \frac{E}{40} \begin{array}{c} \begin{array}{cccc} 0 & 0 & 1 & 2 \end{array} \\ \begin{bmatrix} \frac{1}{2} & \frac{1}{2} & -\frac{1}{2} & -\frac{1}{2} \\ \frac{1}{2} & \frac{1}{2} & -\frac{1}{2} & -\frac{1}{2} \\ -\frac{1}{2} & -\frac{1}{2} & \frac{1}{2} & \frac{1}{2} \\ -\frac{1}{2} & -\frac{1}{2} & \frac{1}{2} & \frac{1}{2} \end{bmatrix} \end{array} \begin{array}{c} \\ 0 \\ 0 \\ 1 \\ 2 \end{array} \tag{13-43b}$$

$$
\underset{(\ell=0,m=-1)}{[K]^{bar3}} = \frac{E}{20}\begin{array}{c} \begin{array}{cccc} 1 & 2 & 3 & 4 \end{array} \\ \begin{bmatrix} 0 & 0 & 0 & 0 \\ 0 & 1 & 0 & -1 \\ 0 & 0 & 0 & 0 \\ 0 & -1 & 0 & 1 \end{bmatrix} \end{array} \begin{array}{c} \\ 1 \\ 2 \\ 3 \\ 4 \end{array} \tag{13-43c}
$$

$$
\underset{\left(\ell=\frac{1}{\sqrt{2}},m=-\frac{1}{\sqrt{2}}\right)}{[K]^{bar4}} = \left(\frac{E}{40}\right)\begin{array}{c} \begin{array}{cccc} 0 & 0 & 3 & 4 \end{array} \\ \begin{bmatrix} \frac{1}{2} & -\frac{1}{2} & -\frac{1}{2} & \frac{1}{2} \\ -\frac{1}{2} & \frac{1}{2} & \frac{1}{2} & -\frac{1}{2} \\ -\frac{1}{2} & \frac{1}{2} & \frac{1}{2} & -\frac{1}{2} \\ \frac{1}{2} & -\frac{1}{2} & -\frac{1}{2} & \frac{1}{2} \end{bmatrix} \end{array} \begin{array}{c} \\ 0 \\ 0 \\ 1 \\ 2 \end{array} \tag{13-43d}
$$

$$
\underset{(\ell=0,m=-1)}{[K]^{bar5}} = \left(\frac{E}{20}\right)\begin{array}{c} \begin{array}{cccc} 0 & 0 & 3 & 4 \end{array} \\ \begin{bmatrix} 0 & 0 & 0 & 0 \\ 0 & 1 & 0 & -1 \\ 0 & 0 & 0 & 0 \\ 0 & -1 & 0 & 1 \end{bmatrix} \end{array} \begin{array}{c} \\ 0 \\ 0 \\ 3 \\ 4 \end{array} \tag{13-43e}
$$

$$
\underset{(\ell=0,m=-1)}{[K]^{bar6}} \left(\frac{E}{20}\right)\begin{array}{c} \begin{array}{cccc} 0 & 0 & 0 & 0 \end{array} \\ \begin{bmatrix} 0 & 0 & 0 & 0 \\ 0 & 1 & 0 & -1 \\ 0 & 0 & 0 & 0 \\ 0 & -1 & 0 & 1 \end{bmatrix} \end{array} \begin{array}{c} \\ 0 \\ 0 \\ 0 \\ 0 \end{array} \tag{13-43f}
$$

The matrix for the truss is obtained by adding appropriate matrix elements.

$$
[K]^{truss} = \left(\frac{E}{20}\right)\begin{array}{c} \begin{array}{cccc} 1 & 2 & 3 & 4 \end{array} \\ \begin{bmatrix} 1.25 & 0.25 & 0 & 0 \\ 0.25 & 1.25 & 0 & -1 \\ 0 & 0 & 1.25 & -0.25 \\ 0 & -1 & -0.25 & 1.25 \end{bmatrix} \end{array} \begin{array}{c} \\ 1 \\ 2 \\ 3 \\ 4 \end{array} \tag{13-44}
$$

Solution of Eq. (13-38) yields the displacements given in Eq. (13-39).

$$[K]^{truss}\begin{Bmatrix} X_1 \\ X_2 \\ X_3 \\ X_4 \end{Bmatrix} = \begin{Bmatrix} 0 \\ 1000 \\ 0 \\ 0 \end{Bmatrix} \tag{13-45}$$

$$\begin{Bmatrix} X_1 \\ X_2 \\ X_3 \\ X_4 \end{Bmatrix} = \begin{Bmatrix} -1.091 \\ 5.454 \\ 0.909 \\ 4.545 \end{Bmatrix}_{\text{in.}} \times 10^{-3} \tag{13-46}$$

Calculation of displacement is identical for the IFMD and the stiffness method. In IFMD forces are back-calculated using the formula ($\{F\} = [G]^{-1}[B]^T\{X\}$) as

$$\begin{Bmatrix} F_1 \\ F_2 \\ F_3 \\ F_4 \\ F_5 \\ F_6 \end{Bmatrix} = \frac{E}{40}\begin{bmatrix} 2 & 0 & 0 & 0 & 0 & 0 \\ 0 & 1 & 0 & 0 & 0 & 0 \\ 0 & 0 & 2 & 0 & 0 & 0 \\ 0 & 0 & 0 & 1 & 0 & 0 \\ 0 & 0 & 0 & 0 & 2 & 0 \\ 0 & 0 & 0 & 0 & 0 & 2 \end{bmatrix}\begin{bmatrix} 1 & 0 & 0 & 0 \\ \frac{1}{\sqrt{2}} & \frac{1}{\sqrt{2}} & 0 & 0 \\ 0 & 1 & 0 & -1 \\ 0 & 0 & \frac{1}{\sqrt{2}} & -\frac{1}{\sqrt{2}} \\ 0 & 0 & 1 & 0 \\ 0 & 0 & 0 & 0 \end{bmatrix}\begin{Bmatrix} -1.091 \\ 5.454 \\ 0.909 \\ 4.545 \end{Bmatrix} \times 10^{-3} \tag{13-47a}$$

The matrix multiplication in Eq. (13-40*a*) yield the six bar forces.

$$\begin{Bmatrix} F_1 \\ F_2 \\ F_3 \\ F_4 \\ F_5 \\ F_6 \end{Bmatrix} = \begin{Bmatrix} -545.5 \\ 771.4 \\ 454.5 \\ -642.8 \\ 454.5 \\ 0 \end{Bmatrix}_{\text{lbf}} \tag{13-47b}$$

In the stiffness method the bar force is calculated as the product of the stiffness coefficient (AE/L) and relative displacement ($u_2 - u_1$) in the local coordinates. Bar force becomes ($F = (AE/\text{L})(u_2 - u_1)^{\text{local}}$. Local displacements ($u_1$ and u_2) are back-calculated from the global displacements $\{X\}$ using the transformation Eq. (13-30). The calculation of the bar forces are identical to the three bar example given by Eq. (13-30).

EXAMPLE 13-3: Cantilevered Beam

The IFM, IFMD, and stiffness method solution procedure is further illustrated by considering the example of a cantilevered beam shown in Fig. 13-2*c*. It is 12 in. long, 2 in. deep, and 0.25 in. thick. It is made of steel with a Young's modulus E of

30,000 ksi and a Poisson's ratio ν of 0.3. It is subjected to a tip load of ($P = 10$ lbf) at the free end. The four-node rectangular membrane element with five internal force unknowns and eight nodal displacements is used. It is discretized by two membrane elements as shown in Fig. 13-8. The model has six nodes and nodes (1 and 6) are fully restrained. A membrane element with four nodes is shown in Fig. 13-9. The direction of element axes (x_1, y_1) and (x_2, y_2) are collinear with the system axes (x, y). This problem does not require any coordinate transformation. The two elements with force and displacement unknowns are depicted in Fig. 13-9. Element 1 has five force unknowns (F_1, F_2, F_3, F_4, F_5). Its four displacement unknowns are (X_1, X_2, X_7, X_8) at nodes 2 and 5, respectively. Displacements are suppressed at its two fixed nodes 1 and 6. Element 2 has five force unknowns (F_6, F_7, F_8, F_9, F_{10}). Its eight displacement unknowns are (X_1, X_2, X_3, X_4, X_5, X_6, X_7, X_8).

IFM Solution

The equilibrium equations for the two-element cantilever beam are generated by following standard assembly procedure. The equilibrium matrices for the two elements are as follows.

$$[B]^1 = \begin{array}{c} \begin{array}{ccccc} F_1 & F_2 & F_3 & F_4 & F_5 \end{array} \\ \begin{bmatrix} -1 & \frac{1}{3} & 0 & 0 & -3 \\ 0 & 0 & -3 & 1 & -1 \\ 1 & -\frac{1}{3} & 0 & 0 & -3 \\ 0 & 0 & -3 & -1 & 1 \\ 1 & \frac{1}{3} & 0 & 0 & 3 \\ 0 & 0 & 3 & 1 & 1 \\ -1 & -\frac{1}{3} & 0 & 0 & 3 \\ 0 & 0 & 3 & -1 & -1 \end{bmatrix} \end{array} \begin{array}{c} \\ 0 \\ 0 \\ X_1 \\ X_2 \\ X_7 \\ X_8 \\ 0 \\ 0 \end{array} \tag{13-48a}$$

$$[B]^2 = \begin{array}{c} \begin{array}{ccccc} F_6 & F_7 & F_8 & F_9 & F_{10} \end{array} \\ \begin{bmatrix} -1 & \frac{1}{3} & 0 & 0 & -3 \\ 0 & 0 & -3 & 1 & -1 \\ 1 & -\frac{1}{3} & 0 & 0 & -3 \\ 0 & 0 & -3 & -1 & 1 \\ 1 & \frac{1}{3} & 0 & 0 & 3 \\ 0 & 0 & 3 & 1 & 1 \\ -1 & -\frac{1}{3} & 0 & 0 & 3 \\ 0 & 0 & 3 & -1 & -1 \end{bmatrix} \end{array} \begin{array}{c} \\ X_1 \\ X_2 \\ X_3 \\ X_4 \\ X_5 \\ X_6 \\ X_7 \\ X_8 \end{array} \tag{13-48b}$$

The system equilibrium matrix [B] of dimension (8×10), which is assembled from the two elemental matrices, is as follows:

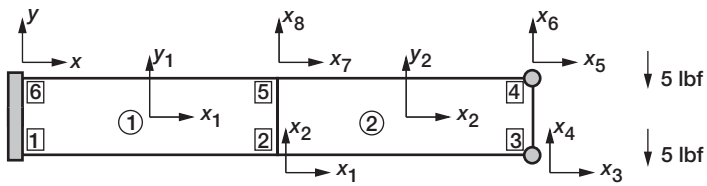

FIGURE 13-8 *Cantilevered beam idealized by two membrane elements.*

$$
[B] = \begin{array}{c}
\begin{array}{cccccccccc} \leftarrow & & \text{Element 1} & & \rightarrow\leftarrow & & \text{Element2} & & & \rightarrow \end{array} \\
\left[\begin{array}{ccccc|ccccc}
1 & -1/3 & 0 & 0 & -3 & -1 & 1/3 & 0 & 0 & -3 \\
0 & 0 & -3 & -1 & 1 & 0 & 0 & -3 & 1 & -1 \\
0 & 0 & 0 & 0 & 0 & 1 & -1/3 & 0 & 0 & -3 \\
0 & 0 & 0 & 0 & 0 & 0 & 0 & -3 & -1 & 1 \\
0 & 0 & 0 & 0 & 0 & 1 & 1/3 & 0 & 0 & 3 \\
0 & 0 & 0 & 0 & 0 & 0 & 0 & 3 & 1 & 1 \\
1 & 1/3 & 0 & 0 & 3 & -1 & -1/3 & 0 & 0 & 3 \\
0 & 0 & 3 & 1 & 1 & 0 & 0 & 3 & -1 & -1
\end{array}\right] \\
\begin{array}{cccccccccc} F_1 & F_2 & F_3 & F_4 & F_5 & F_6 & F_7 & F_8 & F_9 & F_{10} \end{array}
\end{array}
\begin{array}{c} X_1 \\ X_2 \\ X_3 \\ X_4 \\ X_5 \\ X_6 \\ X_7 \\ X_8 \\ \\ \end{array}
\qquad (13\text{-}48c)
$$

The number of entries in any column corresponds to the entries in one elemental equilibrium matrix irrespective of the problem size. Thus, the system equilibrium matrix is a very sparse matrix.

Compatibility Matrix

The compatibility matrix is obtained from the deformation displacement relations ($\{\beta\} = [B]^T\{X\}$). In the DDR, 10 deformations (which correspond to the 10 force variables) are expressed in terms of eight displacements ($X_1, X_2, \ldots, X_8$). The problem has two CC that are obtained by eliminating the eight displacements from the 10 DDR as

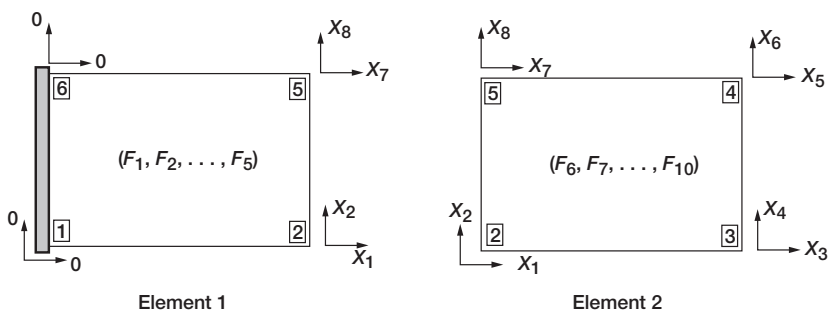

FIGURE 13-9 *Force and displacements of the model.*

$$[C] = \begin{bmatrix} 0 & 0 & -1/3 & 1 & 0 & 0 & 0 & 0 & 0 & 0 \\ 0 & 0 & 2/3 & 0 & 0 & 0 & 0 & -1/3 & 1 & 0 \end{bmatrix} \tag{13-48d}$$

Like the $[B]$ matrix, this (2×10) compatibility matrix $[C]$ is also sparse.

Flexibility Matrix

The flexibility matrix for the problem is obtained as the diagonal concatenation of the two elemental flexibility matrices as

$$[G] = \left[\begin{array}{c|c} [G]_1 & \\ \hline & [G]_2 \end{array}\right]$$

where

$$[G]_1 = [G]_2 = 1.6 \times 10^{-6} \begin{bmatrix} 1 & 0 & -0.3 & 0 & 0 \\ 0 & 1/3 & 0 & 0 & 0 \\ -0.3 & 0 & 1 & 0 & 0 \\ 0 & 0 & 0 & 1/3 & 0 \\ 0 & 0 & 0 & 0 & 2.6 \end{bmatrix} \tag{13-48e}$$

The governing equations, $[S]\{F\} = \{P\}$, of the IFM (which can be obtained from the equilibrium matrix $[B]$, compatibility matrix $[C]$, and flexibility matrix $[G]$) have the following form:

$$\left[\begin{array}{rrrrr|rrrrr} 1 & -1/3 & 0 & 0 & -3 & -1 & 1/3 & 0 & 0 & -3 \\ 0 & 0 & -3 & -1 & 1 & 0 & 0 & -3 & 1 & -1 \\ 0 & 0 & 0 & 0 & 0 & 1 & -1/3 & 0 & 0 & -3 \\ 0 & 0 & 0 & 0 & 0 & 0 & 0 & -3 & -1 & 1 \\ 0 & 0 & 0 & 0 & 0 & 1 & 1/3 & 0 & 0 & 3 \\ 0 & 0 & 0 & 0 & 0 & 0 & 0 & 3 & 1 & 1 \\ 1 & 1/3 & 0 & 0 & 3 & -1 & -1/3 & 0 & 0 & 3 \\ 0 & 0 & 3 & 1 & 1 & 0 & 0 & 3 & -1 & -1 \\ \hline 1.6 & 0 & -5.33 & 5.33 & 0 & 0 & 0 & 0 & 0 & 0 \\ -3.2 & 0 & 10.66 & 0 & 0 & 1.6 & 0 & -5.33 & 5.33 & 0 \end{array}\right] \begin{Bmatrix} F_1 \\ F_2 \\ F_3 \\ F_4 \\ F_5 \\ F_6 \\ F_7 \\ F_8 \\ F_9 \\ F_{10} \end{Bmatrix} = \begin{Bmatrix} 0 \\ 0 \\ 0 \\ -5 \\ 0 \\ -5 \\ 0 \\ 0 \\ 0 \\ 0 \end{Bmatrix} \tag{13-48f}$$

The first eight rows represent the EE, and the last two rows represent the CC. The last two CC rows are normalized by a factor of 10^{-7}. Solution of Eq. (13-46) yields the forces

$$\begin{Bmatrix} F_1 \\ F_2 \\ F_3 \\ F_4 \\ F_5 \\ F_6 \\ F_7 \\ F_8 \\ F_9 \\ F_{10} \end{Bmatrix} = \begin{Bmatrix} 0 \\ 135 \\ 0 \\ 0 \\ 5 \\ 0 \\ 45 \\ 0 \\ 0 \\ -5 \end{Bmatrix} \tag{13-48g}$$

From the forces, stress resultants and stresses can be calculated from Eqs. (13-18) and (13-8*a*). For the second element, the stress components that are accurate at the center of the element are as follows:

$$\begin{aligned} \sigma_x &= \frac{N_x}{t} = 540\,\text{psi} \\ \sigma_y &= \frac{N_y}{t} = 0\,\text{psi} \\ \tau_{xy} &= \frac{N_{xy}}{t} = -20\,\text{psi} \end{aligned} \tag{13-48h}$$

The stress (σ_x and σ_y) agree with the strength of materials solution. The shear stress at $\tau_{xy} = -20\,\text{psi}$ agrees with the average shear stress calculated from the strength of materials formula ($\tau = -P/A = -10/[2(0.25)] = -20\,\text{psi}$). There is no stress in the transverse direction ($\sigma_y = 0$), which agrees with the strength of materials results.

The displacements can be obtained via back-substitution in the formulas ($\{X\} = [J][G]\{F\}$). The maximum value of the displacement, which occurs at node 5 or 6 along the *y*-direction, is

$$\delta_{\max} = -1.100 \times 10^{-3}\,\text{in.} \tag{13-49a}$$

$$\delta_{\text{beam solution}} = -1.152 \times 10^{-3}\,\text{in.} \tag{13-49b}$$

The IFM displacement solution given by Eq. (13-49*a*) is quite close to the beam result in Eq. (13-49*b*).

Dual Integrated Force Method

The pseudostiffness matrix of the dual method is obtained by using the two-element model following the procedure for the fixed bar in Example 13-1. The system equation of IFMD has the following form

$$
10^6 \begin{bmatrix} 6.1 & 0.0 & 1.3 & -0.1 & -2.6 & -1.3 & -3.4 & 0.0 \\ & 16.6 & 0.1 & 4.0 & -1.3 & -4.5 & 0.0 & -15.6 \\ & & 3.0 & -1.3 & -1.7 & -0.1 & -2.6 & 1.3 \\ & & & 8.3 & 0.1 & -7.8 & 1.3 & -4.5 \\ & & & & 3.0 & 1.3 & 1.3 & -0.1 \\ & & & & & 8.3 & 0.1 & 4.0 \\ & & \text{sym} & & & & 6.1 & 0.0 \\ & & & & & & & 16.6 \end{bmatrix} \begin{Bmatrix} X_1 \\ X_2 \\ X_3 \\ X_4 \\ X_5 \\ X_6 \\ X_7 \\ X_8 \end{Bmatrix} = \begin{Bmatrix} 0 \\ 0 \\ 0 \\ -5 \\ 0 \\ -5 \\ 0 \\ 0 \end{Bmatrix} \tag{13-50}
$$

Solution of Eq. (13-50) yields the nodal displacements as

$$
\{X\}_{ifmd} = \begin{Bmatrix} -1.080 \\ -3.344 \\ -1.440 \\ -11.008 \\ 1.440 \\ -11.008 \\ 1.080 \\ -3.344 \end{Bmatrix}_{\text{in.}} \times 10^{-4} \tag{13-51}
$$

The displacements obtained by IFMD are identical to those obtained by IFM, with the maximum value at 1.1×10^{-3} in., which is identical to that for the IFM solution.

Stress Calculation in IFMD

In the dual method, the 10-component force vector $\{F\}$, which is back-calculated from the formula given by Eq. (13-5), $\{F\} = [G]^{-1}[B]^T\{X\}$, is identical to that obtained for IFM (see Eq. 13-48*g*). From forces, stresses that can be computed as indicated for the IFM become identical to IFM results. In brief, both IFM and IFMD yield identical results for stresses and displacements, as expected.

Regular Stiffness Method

Using the standard stiffness procedure, one can obtain the stiffness equations for the two-element cantilever beam as

$$
10^6 \begin{bmatrix} 7.6 & 0.0 & 0.5 & -0.1 & -1.9 & -1.3 & -4.8 & 0.0 \\ & 17.1 & 0.1 & 3.8 & -1.3 & -4.3 & 0.0 & -16.1 \\ & & 3.8 & -1.3 & -2.4 & -0.1 & -1.9 & 1.3 \\ & & & 8.6 & 0.1 & -8.1 & 1.3 & -4.3 \\ & & & & 3.8 & 1.3 & 0.5 & -0.1 \\ & & & & & 8.6 & 0.1 & 3.8 \\ & & \text{sym} & & & & 7.6 & 0.0 \\ & & & & & & & 17.1 \end{bmatrix} \begin{Bmatrix} X_1 \\ X_2 \\ X_3 \\ X_4 \\ X_5 \\ X_6 \\ X_7 \\ X_8 \end{Bmatrix} = \begin{Bmatrix} 0 \\ 0 \\ 0 \\ -5 \\ 0 \\ -5 \\ 0 \\ 0 \end{Bmatrix} \tag{13-52}
$$

There is considerable difference in the IFMD equation given by Eq. (13-50) and the stiffness equation, Eq. (13-52). The stiffness equations are stiffer than the IFMD equations. Solution of Eq. (13-52) yields the displacement vector as follows:

$$\{X\}_{\text{stiffness}} = \begin{Bmatrix} -0.237 \\ -0.815 \\ -0.316 \\ -2.576 \\ 0.316 \\ -2.576 \\ 0.237 \\ -0.815 \end{Bmatrix}_{\text{in.}} \times 10^{-4} \tag{13-53}$$

The maximum value of displacement ($\delta_{max} = -2.576 \times 10^{-4}$) is much smaller, and it is only 22 percent of that of the strength of materials solution. Stress calculation for membrane structure in the stiffness method follows the steps shown for the truss. This can become quite cumbersome and it is avoided. In summary, both IFM and IFMD yield quite accurate stress and displacement solution. The stiffness method predicts lower displacement, or the model is very stiff. Fidelity of finite element solution can be improved when a fine idealization with many elements and nodes are used.

Problems

Use the properties of material given in Tables A5-1 and A5-2 to solve the problems.

13-1 Model the steel truss shown in Fig. P13-1 for finite element calculations. Do not attempt solving it. It is subjected to mechanical loads as shown. Specify the following parameters and mark them in a finite element model.

(a) Force variables, $\{F\}$
(b) Deformation variables, $\{\beta\}$
(c) Displacement degrees of freedom, $\{X\}$
(d) Load, $\{P\}$
(e) Reactions, $\{R\}$
(f) Suppressed displacements
(g) Dimension of initial deformation vector, $\{\delta R\}$
(h) Number of equilibrium equations, dimension of EE matrix $[B]$
(i) Number of compatibility conditions, dimension of CC matrix $[C]$
(j) Dimension and bandwidth of the flexibility matrix $[G]$ of the truss
(k) Dimension of IFM governing matrices, $[S]$ and $[J]$
(l) Dimension of IFMD governing matrix $[D]$
(m) Dimension of stiffness matrix $[K]$

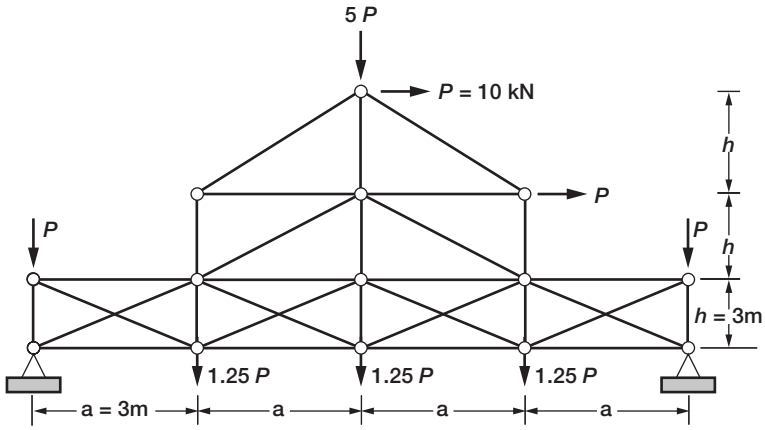

FIGURE P13-1

13-2 Bars of the three trusses shown in Fig. P13-2 (with a = 100 in and 1 in^2 for the bars area) are made of steel (for the inclined bars) and aluminum (for the vertical bar) and it is subjected to mechanical load at node 1. Calculate the bar forces, nodal displacements, and reactions using both the primal and dual integrated force methods and the stiffness method. Area of the bars is one sq. in. and a = 100 in.

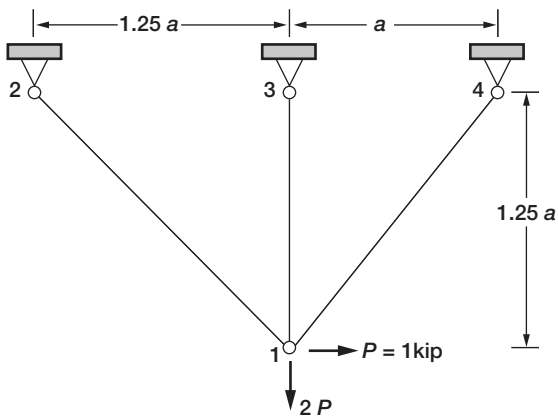

FIGURE P13-2

13-3 The sum of the row coefficients of the dual element matrix $[D]$ is equal to zero.

$$\sum_j D_{ij} = 0 \quad \text{for} \quad \text{any row } i$$

Verify the null condition for the rectangular membrane element and explain why. Does the null condition also apply to the column coefficients, and why?

13-4 An aluminum beam shown in Fig. P13-4 is modeled by six rectangular membrane elements. The boundary conditions and external loads are depicted in the figure. Identify the following parameters and mark them in a finite element model.

(a) Force vector, $\{F\}$
(b) Deformation vector, $\{\beta\}$
(c) Displacement vector, $\{X\}$
(d) Load, $\{P\}$
(e) Reactions, $\{R\}$
(f) Suppressed displacements
(g) Number of equilibrium equations, dimension of EE matrix $[B]$
(h) Number of compatibility conditions, dimension of CC matrix $[C]$
(i) Dimension and bandwidth of the flexibility matrix $[G]$
(j) Dimension of IFM governing matrices, $[S]$ and $[J]$
(k) Dimension of IFMD governing matrix $[D]$
(l) Dimension of stiffness matrix $[K]$

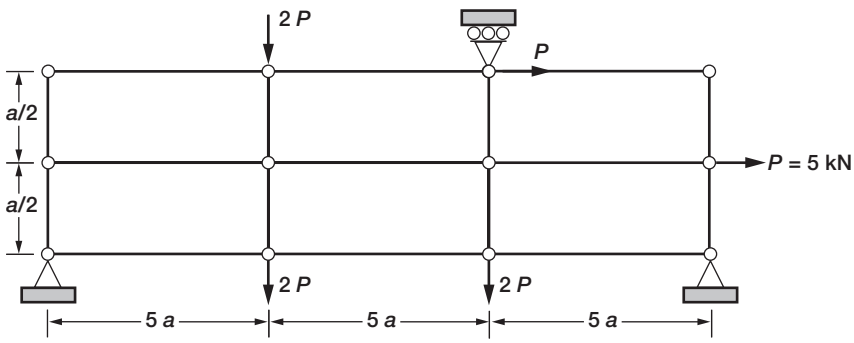

FIGURE P13-4

13-5 The aluminum beam with dimensions and load shown in Fig. 13-5 is modeled by a single rectangular membrane element with boundary conditions as shown. Calculate the internal forces, nodal displacements, and reactions using both the primal and dual integrated force methods as well as the stiffness method.

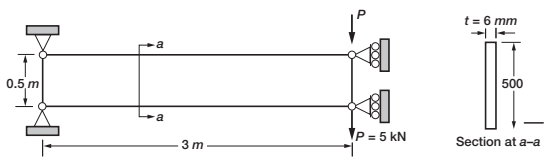

FIGURE P13-5

14 Special Topics

Engineers have devised useful techniques to solve simple indeterminate strength of materials problems. Methods of redundant force and conjugate beam are two such techniques. Both techniques are illustrated through solution of examples. This chapter also provides solutions to a few other strength of materials problems.

14.1 Method of Redundant Force

The method of redundant force can be used to solve indeterminate truss, beam, and shaft problems. The method is developed first for a truss and it is then generalized for other structure types. The method is discussed considering the truss shown in Fig. 14-1*a*. The truss has four nodes and six bars. It is made of aluminum with modulus ($E = 10{,}000$ ksi) and size ($a = 100$ in.). Unity area ($A = 1$) is assumed for all bars. The truss is one-degree indeterminate because there are six bar forces ($F_1,\ F_2, \ldots,\ F_6;\ n = 6$) and five displacements ($u_2, v_2, u_3, v_3, u_4;\ m = 5$) as marked in Fig. 14-1*b*. In this method the indeterminate truss is separated into a determinate truss and a redundant bar as shown in Fig. 14-1*c*. The number of redundant bars must be equal to the degree of indeterminacy ($r = n - m = 1$), which is one for the problem. The determinate truss, which is also called the basis structure, should have ($n - r = 5$) bars and it must be a stable structure. In this method the (r) number of redundant forces are determined first. These redundant forces are applied as loads on the determinate truss along with the prescribed external loads. Solution of the determinate truss thus loaded also is the response of the indeterminate truss. The method of redundant force has four basic steps.

Step 1—Basis Determinate Structure

A basis determinate structure is not unique. The maximum number of possible basis structures (b_{max}) for an (r) degree indeterminate truss with (n) bars can be:

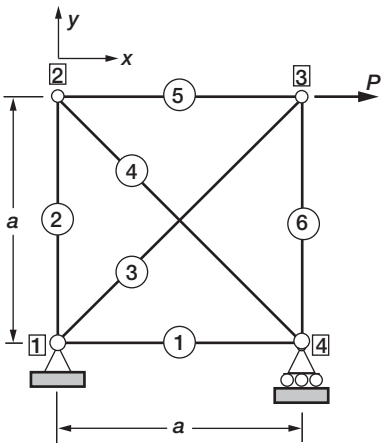

(a) Six-bar truss.

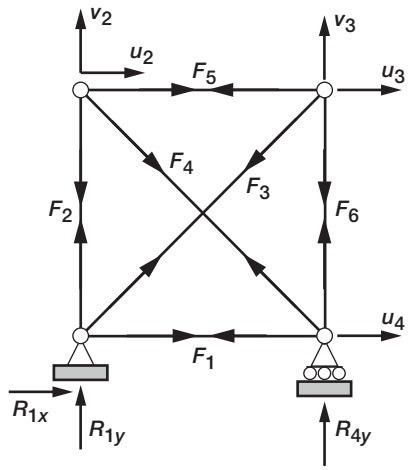

(b) Force and displacement unknown.

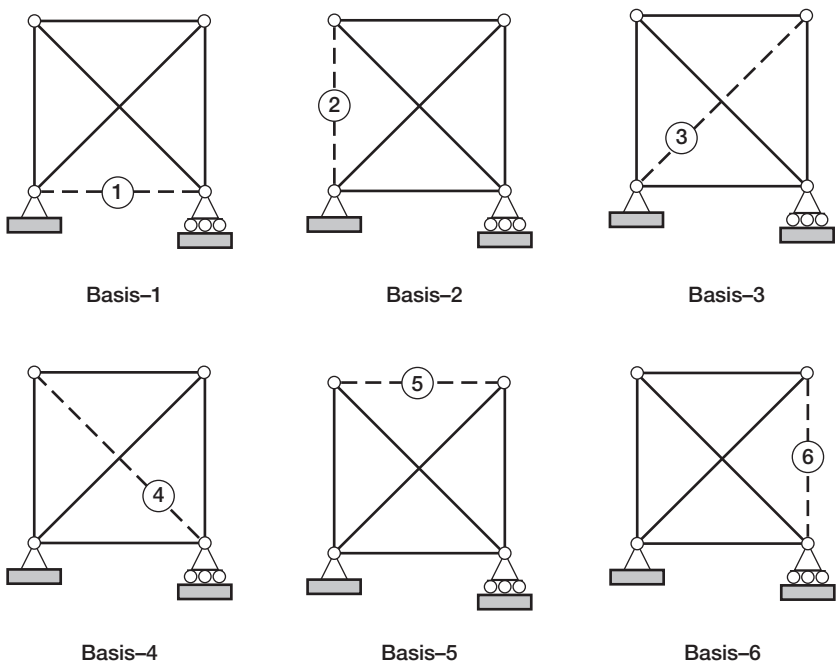

(c) Possible basis structures.

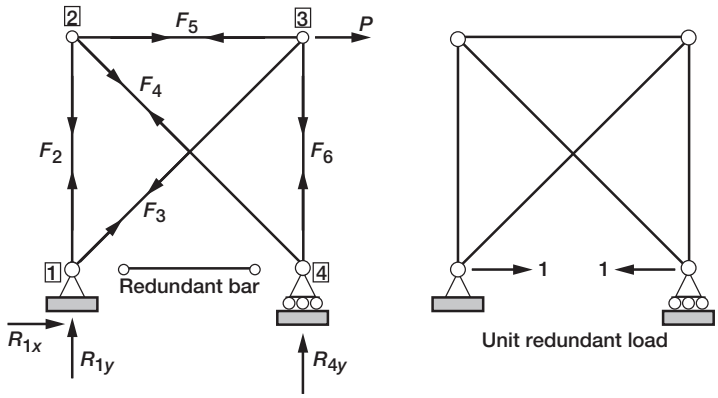

(d) An determinate truss.

FIGURE 14-1 *Six-bar truss.*

$$b_{max} = \frac{n!}{(n-r)!r!} \tag{14-1}$$

For the truss shown in Fig. 14-1*a*, there are six ($b_{max} = 6$) basis structures as shown in Fig. 14-1*c*. Bar 1 is considered to be the redundant member, as shown in the dotted line, while the basis structure with five bars (2–6) is shown in solid lines. The basis structure is determinate because ($n = m = 5$) and it is a stable structure. The other five basis structures are also determinate and stable. For this simple truss any one bar can be identified as the redundant member. The first basis structure shown in Fig. 14-1*c* is used to solve the problem.

Consider next a truss with ($n = 23$) bars and ($m = 17$) displacement components as shown in Fig. 14-2. The truss is six degrees indeterminate ($r = n - m = 6$). This truss can have a maximum of over one hundred thousand ($b_{max} = 23!/(17!\,6!) = 100{,}947$) basis structures. Many of the basis structures may be unstable and cannot be used. Therefore, the identification of a basis structure can be a challenge even for a moderately complex structure, and this is one reason for the demise of the redundant force method.

Step 2—Force Solution for the Basis Structure

We return to solve the truss shown in Fig. 14-1. Internal forces in the determinate truss are obtained first for the external load, then for the redundant force considering it as a load as shown in Fig. 14-1*d*. Instead of a redundant force ($R = F_1$), it is customary to analyze the truss for unit load ($R = 1$) and prorate the response for F_1. Because the redundant force is an internal force, two-unit loads are applied as shown in the figure.

(a) Analysis for External Load The basis structure is analyzed for the external load P. The three reactions (R_{1x}, R_{1y}, R_{4y}) are calculated first from a moment and two transverse equilibrium equations.

$$aR_{4y} - aP = 0$$
$$\text{or,}\ \ R_{4y} = P$$

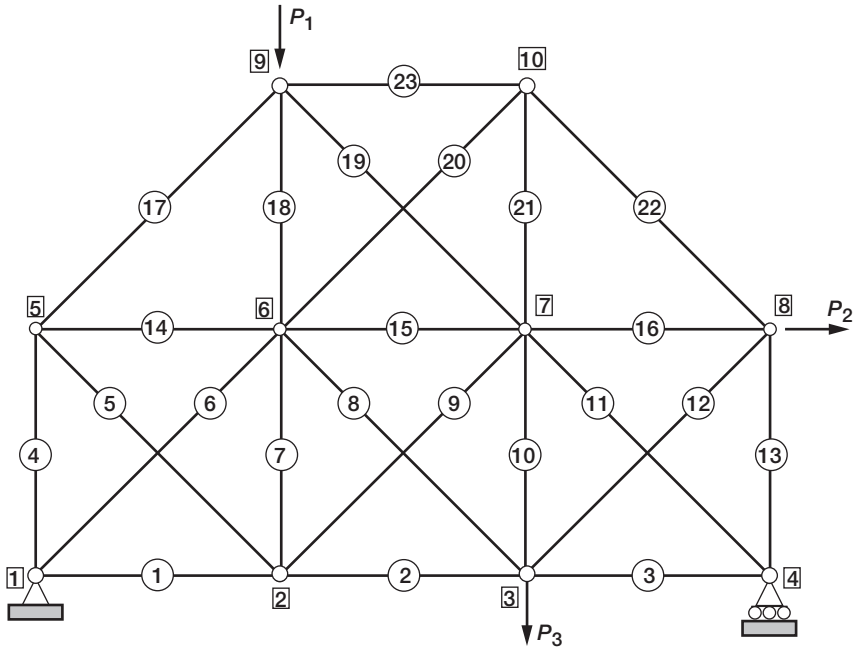

FIGURE 14-2 *Six-bar truss.*

$$R_{1y} = -P$$
$$R_{1x} = -P$$

Nodal equilibrium along the five displacement directions (u_2, v_2, u_3, v_3, and u_4) yield the five bar forces

$$\frac{1}{\sqrt{2}}F_3 + R_{1x} = 0$$
$$F_3 = \sqrt{2}P$$
$$F_2 + \frac{F_3}{\sqrt{2}} + R_{1y} = 0$$
$$F_2 = 0$$
$$-F_2 - \frac{F_4}{\sqrt{2}} = 0$$
$$F_4 = 0$$
$$F_5 + \frac{F_4}{\sqrt{2}} = 0$$

$$F_5 = 0$$

$$F_6 + \frac{F_4}{\sqrt{2}} + R_{4y} = 0$$

$$F_6 = -P$$

$$\begin{aligned} F_1 &= 0 \\ F_2 &= 0 \\ F_3 &= \sqrt{2}P \\ F_4 &= 0 \\ F_5 &= 0 \\ F_6 &= -P \end{aligned} \tag{14-2}$$

(b) Analysis for Redundant Load The basis structure is analyzed for unit redundant load. As before, the three reactions (R_{1x}, R_{1y}, R_{4y}) are calculated first. The reactions are zero because the redundant forces with equal magnitude and opposite direction self-equilibrate.

$$R_{1x} = R_{1y} = R_{4y} = 0$$

Nodal equilibrium yields bar forces

$$\frac{F_3}{\sqrt{2}} + 1 = 0$$

$$F_3 = -\sqrt{2}$$

$$F_2 + \frac{F_3}{\sqrt{2}} = 0$$

$$F_2 = 1$$

$$-F_2 - \frac{F_4}{\sqrt{2}} = 0$$

$$F_4 = -\sqrt{2}$$

$$-F_5 - \frac{F_4}{\sqrt{2}} = 0$$

$$F_5 = 1$$

$$F_6 + \frac{F_4}{\sqrt{2}} = 0$$

$$F_6 = 1$$

$$\begin{aligned} F_1 &= 1 \\ F_2 &= 1 \end{aligned}$$

$$F_3 = -\sqrt{2}$$
$$F_4 = -\sqrt{2}$$
$$F_5 = 1$$
$$F_6 = 1 \tag{14-3}$$

Step 3—Calculation of Redundant Forces

Redundant force is determined using Castigliano's theorem. The method is developed for a problem with (r) number of redundant forces and then it is specialized for the present problem with a single redundant force. For the six-bar truss, the bar forces can be obtained as the superposition of two responses. First is the response of the determinate truss for external load (P) given by Eq. (14-2). Second is the response of the determinate truss for unit value of redundant ($R = 1$), given by Eq. (14-3) but prorated by the magnitude of the redundant force (R). This concept is generalized for a general indeterminate truss.

Force (F_i) in the bar of a truss with (n) bars and (r) redundant forces is obtained by adding two responses: (1) for external load (F_i^P) and (2) for redundant force (F_i^{Rj}). Force in i^{th} bar in the basis structure due to the external load is (F_i^P). Likewise the force in i^{th} bar due to the redundant R_j considered as load in the basis structure is F_i^{Rj}. The force from external load and all ($r = n - m$) redundant forces becomes

$$F_i = F_i^P + \sum_{j=1}^{r} F_i^{R_j} \quad (1 \le i \le n)$$
$$F_i = F_i^P + \sum_{j=1}^{r} b_{ij} R_j \tag{14-4a}$$

Here, F_i^P represents the force in the truss bars because of external loads. For the truss shown in Fig. 14-1b, it is equal to the forces given by Eq. (14-2). The term (b_{ij}) represents the force in the truss bars because of unit value of redundant forces R_j. For a single redundant force the equation reduces to:

$$F_i = F_i^P + b_i R \tag{14-4b}$$

For the truss example (b_i) is given by Eq. (14-3).

$$b_1 = F_1 = 1$$
$$b_2 = F_2 = 1$$
$$b_3 = F_3 = -\sqrt{2}$$
$$b_4 = F_4 = -\sqrt{2}$$
$$b_5 = F_5 = 1$$
$$b_6 = F_6 = 1 \tag{14-4c}$$

The strain or internal energy (U) stored in the truss can be written as:

$$U = \sum_{i=1}^{n} \frac{F_i^2 \ell_i}{2A_i E_i} \tag{14-5a}$$

Here, (F_i, ℓ_i, A_i, and E_i) represent the force, length, area, and Young's modulus in the ith bar. The term ($g_i = \ell_i / A_i E_i$) is the flexibility coefficient of the ith bar. The internal energy can be rewritten using the flexibility coefficient as:

$$U = \sum_{i=1}^{n} \frac{g_i F_i^2}{2} \tag{14-5b}$$

The energy term (U) is written in terms of real bar forces (F_i). An application of the Castigliano's second theorem; the derivative of internal energy with respect to redundant R_j is equal to the displacement (δ_j). For r-number of redundant forces there are r-simultaneous equations.

$$\frac{\partial U}{\partial R_j} = \delta_j \quad j = 1, 2, \ldots, r \tag{14-5c}$$

Here, (δ_j) represents the displacement in the indeterminate structure that corresponds to the redundant force (R_j). For external load the displacement through which the load moves is (δ_j) and it is a nonzero quantity. For redundant forces or indeterminate support reactions there exists no displacement and it is set to zero ($\delta_j = 0$) to obtain:

$$\frac{\partial U}{\partial R_j} = 0 \tag{14-5d}$$

Equation (14-5c) can be expanded in force variables to obtain r-simultaneous equations in r-redundant forces. We illustrate the process considering a problem with two redundant forces ($r = 2$) and then generalize it for r-redundant forces. Castigliano's theorem yields two equations in two unknown redundant forces (R_1 and R_2).

$$U = \frac{1}{2} \sum_{i=1}^{n} \left(F_i^P + b_{i1} R_1 + b_{i2} R_2\right)^2 g_i = 0 \tag{14-5e}$$

$$\frac{\partial U}{\partial R_1} = \sum_{i=1}^{n} \left(F_i^P + b_{i1} R_1 + b_{i2} R_2\right) g_i b_{i1} = 0$$

$$\frac{\partial U}{\partial R_2} = \sum_{i=1}^{n} \left(F_i^P + b_{i1} R_1 + b_{i2} R_2\right) g_i b_{i2} = 0 \tag{14-6}$$

Solution of Eq. (14-6) yields the value of the redundant forces. Internal forces are then back-calculated using Eq. (14-4*a*). For a single-degree indeterminate truss the redundant force calculation is specialized to the following equation.

$$\sum_{i=1}^{n}\left(F_i^P + b_i R\right) g_i b_i = 0$$

$$\sum_{i=1}^{n}\left(F_i^P b_i g_i\right) + R\sum_{i=1}^{n} b_i^2 g_i = 0$$

$$R = -\frac{\sum_{i=1}^{n}\left(F_i^P b_i g_i\right)}{\sum_{i=1}^{n}\left(b_i^2 g_i\right)} \tag{14-7a}$$

For a truss with r-redundant forces the r-number of equations are as follows.

$$\begin{aligned}
&R_1\sum_i b_{i1}^2 g_i + R_2\sum_i b_{i2}b_{i1}g_i + R_3\sum_i b_{i3}b_{i1}g_i + \cdots + R_r\sum_i b_{ir}b_{i1}g_i = -\sum_i F_i^P g_i b_{i1}\\
&R_1\sum_i b_{i1}b_{i2}g_i + R_2\sum_i b_{i2}^2 g_i + R_3\sum_i b_{i3}b_{i2}g_i + \cdots + R_r\sum_i b_{ir}b_{i2}g_i = -\sum_i F_i^P g_i b_{i2}\\
&\vdots\\
&R_1\sum_i b_{i1}b_{ir}g_i + R_2\sum_i b_{i2}b_{ir}g_i + R_3\sum_i b_{i3}b_{ir}g_i + \cdots + R_r\sum_i b_{ir}^2 g_i = -\sum_i F_i^P g_i b_{ir}
\end{aligned} \tag{14-7b}$$

This equation is also referred to as the flexibility equation in traditional structural analysis. This is a symmetrical equation. For example, second coefficient in the first equation ($\Sigma b_{i2}b_{i1}g_i$) is identically equal to the first coefficient in the second equation ($\Sigma b_{i1}b_{i2}g_i$), and the pattern continues throughout the r-equations. The diagonal terms of the equations are positive. Traditionally, the equation is setup and solved using a tabular format. The process is illustrated in Table 14-1 for the truss shown in Fig. 14-1*a*.

The redundant force, which is (F_1), is obtained as the negative ratio of the summed value of the sixth column to seventh column as

$$R = F_1 = \frac{\left(1 + 2\sqrt{2}P\right)}{4\left(1 + \sqrt{2}\right)} = \frac{3.83}{9.66}P = 0.396P \tag{14-8a}$$

The bar forces are back-calculated using Eq. 14-4*b* as

$$F_1 = F_1^P + b_1 R = R = 0.396P$$
$$F_2 = F_2^P + b_2 R = R = 0.396P$$

TABLE 14-1 Method of Redundant Force for a Six-Bar Truss

Member No. (i)	$g_i = (\ell/A_iE_i) \times (a10^{-6}/10)$	F_i^P	b_i	b_i^2	$F_i^P b_i g_i \times (a10^{-6}/10)$	$b_i^2 g_i \times (a10^{-6}/10)$
1	1.0	0.0	1.0	1.0	0.0	1.0
2	1.0	0.0	1.0	1.0	0.0	1.0
3	$\sqrt{2}$	$\sqrt{2}P$	$-\sqrt{2}$	2.0	$-2\sqrt{2}P$	$2\sqrt{2}$
4	$\sqrt{2}$	0.0	$-\sqrt{2}$	2.0	0.0	$2\sqrt{2}$
5	1.0	0.0	1.0	1.0	0.0	1.0
6	1.0	$-P$	1.0	1.0	$-P$	1.0
Σ	–	–	–	–	$-(1+2\sqrt{2})P$	$4+4\sqrt{2}$

$$
\begin{aligned}
F_3 &= F_3^P + b_3R = \sqrt{2}(P-R) = 0.854P \\
F_4 &= F_4^P + b_4R = -\sqrt{2}R = -0.560P \\
F_5 &= F_5^P + b_5R = R = 0.396P \\
F_6 &= F_6^P + b_6R = -P = R = -0.604P
\end{aligned}
\tag{14-8b}
$$

Step 4—Calculation of Displacement

Displacement calculation also uses the Castigliano's theorem. Typically a few displacement components are calculated in this method. Let us assume that it is required to calculate the displacement at a node (n_1) along the direction (d_1). According to the theorem the displacement component (δ_{n1d1}) can be calculated as:

$$
\delta_{n_1d_1} = \frac{\partial U}{\partial P_{n_1d_1}} = \sum_{i=1}^{n} \frac{F_i\ell_i}{A_iE_i} b_{in_1d_1} \tag{14-9}
$$

Here (F_i) is the force in the ith bar of the indeterminate structure. The vector $\{b_{in1d1}\}$ can be calculated in one of two ways:

(a) It is the force in the ith bar of the indeterminate structure when a unit load is applied along direction (d_1) at node n_1. This is difficult because it requires solution of an indeterminate truss.
(b) It is the force in the ith bar of the basis determinate structure when a unit load is applied along direction (d_1) at node n_1. This calculation is simple because a determinate truss is used.

Both cases (a) and (b) yield the same displacement solution for static loads. Case (b) will not work for dynamic analysis because this process neglects the inertia of the redundant bars.

For the six-bar truss let us calculate the displacement along the load using both cases (a) and (b). For case (b) the bar forces when a unit load ($P = 1$) is applied at node 3 along the x-coordinate direction are obtained by specializing Eq. (14-2) for ($P = 1$).

$$\{b_{41}\} = \begin{Bmatrix} 0 \\ 0 \\ 1.414 \\ 0 \\ 0 \\ -1 \end{Bmatrix} \tag{14-10a}$$

The displacement is calculated as

$$\delta_{41} = \frac{a}{AE}\left(\sqrt{2}F_3 b_{341} + F_6 b_{641}\right)$$

for

$$a = 100\,\text{in.}, A = 1\,\text{in.}^2,\ E = 10 \times 10^6\,\text{psi},\ \ P = 1\,\text{kip}$$
$$\delta_{41} = 0.023\,\text{in.} \tag{14-10b}$$

For case (b) the bar forces when a unit load is applied at node 3 along the x-coordinate direction are obtained from indeterminate analysis and it is as follows.

$$\{b_{41}\} = \begin{Bmatrix} 0.396 \\ 0.396 \\ 0.853 \\ -0.506 \\ 0.396 \\ -0.603 \end{Bmatrix} \tag{14-11a}$$

The displacement is calculated as

$$\begin{aligned} \delta_{41} &= \frac{a}{AE}\left(F_1 b_{141} + F_2 b_{241} + \sqrt{2}F_3 b_{341} + \sqrt{2}F_4 b_{441} + F_5 b_{541} + F_6 b_{641}\right) \\ &= 0.023\,\text{in.} \end{aligned} \tag{14-11b}$$

Same displacement value is obtained either from case (a), or from case (b). The reader may note this simplification cannot be extended to dynamic analysis.

Let us calculate next the displacement at node 2 along the y-coordinate direction. This calculation requires the determination of bar forces (b_{i22}) when a unit load is applied at node 2 along the y-coordinate direction. Nodal equilibrium equations yield these forces as

$$\{b_{22}\} = \begin{Bmatrix} 0.0 \\ 1.0 \\ 0.0 \\ 0.0 \\ 0.0 \\ 0.0 \end{Bmatrix} \tag{14-12a}$$

The load is transferred to the support node 1 through bar 2, which carries load of unity and there is no force in any other bars.

The displacement is obtained as

$$\delta_{22} = \frac{a}{AE} F_2 b_{222} = \frac{100 \times 396 \times 1}{1 \times 10 \times 10^6} = 0.0039\,\text{in.} \tag{14-12b}$$

14.2 Method of Redundant Force for a Beam

The method of redundant force for a beam is formulated by modifying the technique that has been developed for indeterminate truss. The method is discussed considering a two-span beam of length ($2a$) as shown in Fig. 14-3a. It is subject to a uniform load of intensity (p) in the first span. It has uniform rigidity (EI). It is required to calculate the internal forces and the transverse displacement at location A (δ_A), along the y-direction at a distance ($7a/16$) from node 1. The structure has three nodes and two beam members. Each beam member has two force unknowns (two moments or a moment and a shear force) or the beam has a total of four ($n = 4$) unknown forces. It has three displacement unknowns, which are slopes at the three nodes, or ($m = 3$). The beam is one-degree indeterminate ($r = n - m = 1$). The steps adopted for truss analysis are modified to obtain the beam analysis.

Step 1—Basis Determinate Structure

Two acceptable basis determinate structures are shown for the beam. The first structure shown in Fig. 14-3b is obtained by releasing the restraint at node 2. It is a simply supported beam. The second basis structure shown in Fig. 14-3c is obtained by introducing a hinge at node 2. At the hinge the moment is zero ($M = 0$) but shear force is transfered and this extra equation can be used to solve the single-degree indeterminate problem. For the continuous beam analysis the first basis is preferred and the analysis is developed using this basis structure. Traditionally, reactions are considered as the force unknowns in the analysis of continuous beams. The reaction at the center support is considered as the redundant force R as shown in Fig. 14-3d.

The reactions of the beam is calculated as the sum of two reactions ($R_1 = R_1^P + RR_1^m$, $R_2 = R$, and $R_3 = R_3^P + RR_3^m$) as marked in Fig. 14-3d. Reactions (R_1^P and R_3^P) are for the first basis structure for the external load (p). Reactions (R_1^m and R_3^m) are for the first basis structure for unit value of redundant ($R = 1$) applied as a load.

Step 2—Force Solution for the Basis Structure

Reactions that are considered as the force unknowns are obtained first for the external load using Fig. 14-3b and then for unit value of the redundant force ($R = 1$) as shown in Fig. 14-3d.

(a) Analysis for External Load The equilibrium equations yield the force response of the beam, shown in Fig. 14-3b. The reactions (R_1^P and R_3^P) are calculated first and then moment function $M^P(x)$ is obtained for the first span (Span 1–2) and second span (Span 2–3).

$$R_1^P = \frac{pa(1.5a)}{2a} = 0.75pa$$
$$R_3^P = pa - 0.75pa = 0.25pa$$

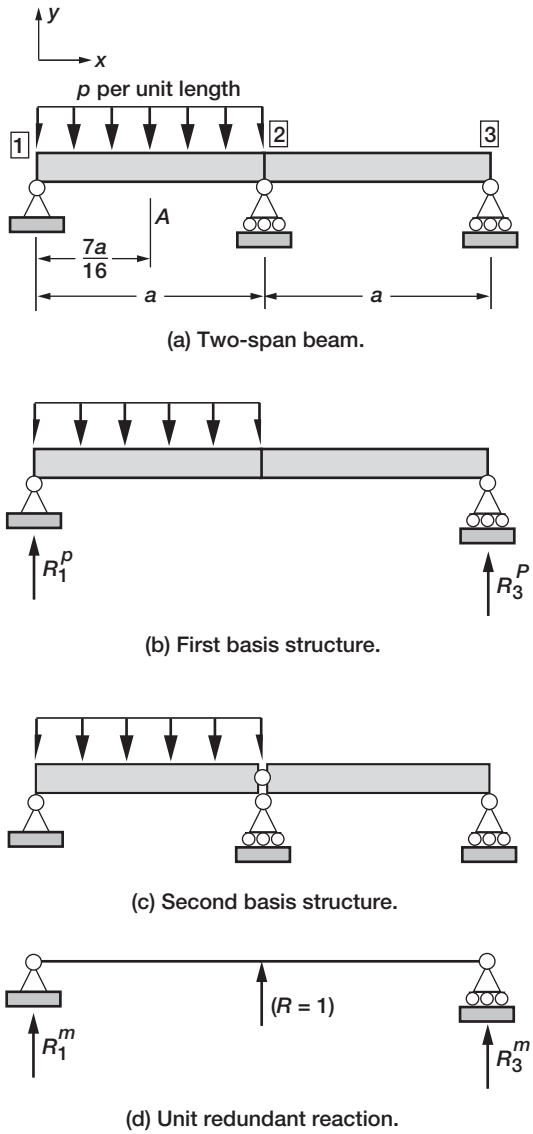

FIGURE 14-3 *Continuous beam.*

For Span 1–2: $(0 \le x \le a)$, see Fig. 14-4*a*

$$M^P(x) = 0.75pax - 0.5px^2$$

For Span 2–3: $(a \le x \le 2a)$, see Fig. 14-4*b*

$$M^P(x) = \frac{pa}{4}(2a - x) \tag{14-13}$$

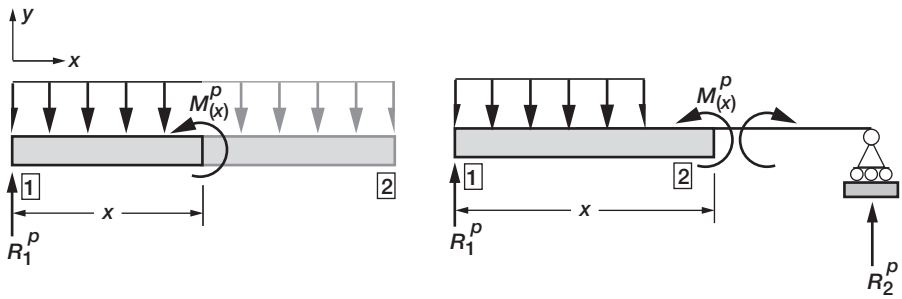

(a) Moment in span 1–2. (b) Moment in span 2–3.

FIGURE 14-4 *Bending moment due to external load.*

(b) Analysis for Redundant Load The force response for unit value of redundant force shown in Fig. 14-3*d* is obtained as

$$R_1^m = R_3^m = -1/2$$

For Span 1−2: $(0 \le x \le a)$, see Fig. 14-5*a*

$$m(x) = -\frac{x}{2}$$

For Span 2−3: $(a \le x \le 2a)$, see Fig.14-5*b*

$$m(x) = \frac{(x-2a)}{2} \tag{14-14}$$

Step 3—Calculation of Redundant Reaction

Redundant force is calculated using Castigliano's theorem. The strain energy (U^b) stored in a beam is due to the bending moment (M). The strain energy expression for a beam with a moment function $M(x)$, which is a function of its length (x), has the following form.

$$U^b = \int_0^{\ell} \frac{M^2(x)}{2EI} dx \tag{14-15a}$$

where $M(x)$ is the bending moment at a location (x) in the beam, (ℓ) is the length of the beam, and (E and I) are the Young's modulus and moment of inertia, respectively.

For a beam with q number of members, the strain energy is obtained by adding contribution for each member as

$$\begin{aligned} U^b &= U_1^b + U_2^b + \cdots + U_q^b \\ &= \int_0^{\ell_1} \frac{M^2(x)\mathrm{d}x}{2EI} + \int_{\ell_1}^{\ell_2} \frac{M^2(x)\mathrm{d}x}{2EI} + \cdots + \int_{\ell_{q-1}}^{\ell_q} \frac{M^2(x)\mathrm{d}x}{2EI} \end{aligned} \tag{14-15b}$$

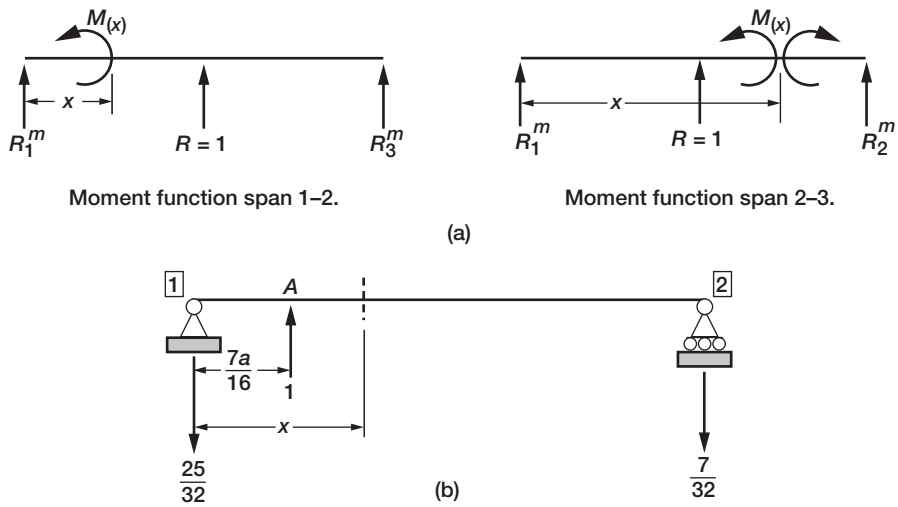

FIGURE 14-5 *(a) Basis structure subjected to load unit. (b) Displacement calculation at location A.*

According to Castigliano's theorem, the partial derivative of the strain energy with respect to a redundant force is zero. This condition yields.

$$\frac{\partial U^b}{\partial R} = \frac{\partial}{\partial R_i}\int \frac{M^2 dx}{EI} = \int \frac{M(x)m(x)}{EI}dx = 0 \tag{14-16a}$$

Here, the lowercase letter (m) for moment represents the derivative of the moment function $M(x)$ with respect to the redundant force (R). It is also equal to the moment in the structure for a unit value of the redundant force; which is also referred to as unit load, or dummy load.

$$m(x) = \frac{\partial M(x)}{\partial R} \tag{14-16b}$$

Consider a beam with a single redundant. The moment function can be written as

$$M(x) = M^P(x) + m(x)R \tag{14-17}$$

where $M^P(x)$ is the bending moment at a location (x) in the determinate basis structure due to the applied load, and $m(x)$ is the bending moment at a location (x) in the determinate basis structure due to the dummy load. Equation (14-16a) can be expressed in terms of (M^P and m) as

$$\int \frac{(M^P + mR)m}{EI}dx = 0$$

$$\int \frac{(M^P m + m^2 R)}{EI}dx = \int \frac{M^P m}{EI}dx + \int \frac{m^2 R}{EI}dx = 0 \tag{14-18b}$$

The value of the redundant force (R) is obtained as the negative ratio of two integrals.

$$R = -\frac{\int \frac{M^P m}{EI} dx}{\int \frac{m^2}{EI} dx} \tag{14-19}$$

The formula in Eq. (14-19) can be generalized for a beam with (r) number of redundant. The moment for (r) redundant case is obtained as

$$M(x) = M^P(x) + m_1(x)R_1 + m_2(x)R_2 + \cdots + m_r(x)R_r \tag{14-20a}$$

The derivative of the strain energy with respect to the dummy load in place of the first redundant force yields

$$\int \frac{1}{EI}\left(M^P m_1 + m_1^2 R_1 + m_2 m_1 R_2 + \cdots + m_r m_1 R_r\right) dx = 0 \tag{14-20b}$$

Similar expressions are obtained for the second dummy load, and extended for the r-dummy loads.

$$\int \frac{1}{EI}\left(M^P m_2 + m_1 m_2 R_1 + m_2^2 R_2 + \cdots + m_r m_2 R_r\right) dx = 0 \tag{14-20c}$$

$$\vdots$$

$$\int \frac{1}{EI}\left(M^P m_r + m_1 m_r R_1 + m_2 m_r R_2 + \cdots + m_r^2 R_r\right) dx = 0 \tag{14-20d}$$

Define load (P_i) and coefficients (f_{ij}) as

$$P_i = \int \frac{M^p m_i}{EI} dx \tag{14-21a}$$

$$f_{ij} = \int \frac{m_i m_j}{EI} dx \tag{14-21b}$$

The redundant forces can be calculated from the following r-equations.

$$\sum_{j=1}^{r} f_{ij} R_j = -P_i \quad (i = 1, 2, \ldots, r) \tag{14-21c}$$

Equation (14-21c) represents the r-number of symmetrical flexibility equations and their solution yields the r unknown redundant forces (R_j). The equation in matrix notation can be written as

$$[f]\{R\} = \{P^R\}$$

$$\text{where } [f] = \begin{bmatrix} f_{11} & f_{12} & \cdots & f_{1r} \\ f_{21} & f_{22} & \cdots & f_{2r} \\ \vdots & & & \\ f_{r1} & f_{r2} & \cdots & f_{rr} \end{bmatrix}$$

$$\{R\} = \begin{Bmatrix} R_1 \\ R_2 \\ \vdots \\ R_r \end{Bmatrix}$$

$$\{P^R\} = -\begin{Bmatrix} P_1 \\ P_2 \\ \vdots \\ P_r \end{Bmatrix} \tag{14-22}$$

The flexibility matrix $[f]$ is a $(r \times r)$ symmetrical matrix. The redundant force vector $\{R\}$ has r-components, and $\{P^R\}$ is an r-component load vector. This equation with some modification to the matrix and vectors can be used to calculate the redundant forces for almost any structure type. The modification pertains to member type and the associated strain energy expression.

At this time we return to continue the solution of the two-span beam. The single redundant reaction can be calculated from Eq. (14-19). Since the rigidity (EI) is uniform it can be set to unity ($EI = 1$) in the calculation of redundant force. The numerator of the equation can be specialized to obtain

$$\int (M^P m)dx = \int_0^a M^P m dx + \int_a^{2a} M^P m\, dx$$

$$\int_0^a (M^P m)dx = \int_0^a (0.75pax - 0.5px^2)\left(\frac{-x}{2}\right)dx = \frac{-pa^4}{16}$$

$$\int_a^{2a} \frac{pa}{4}(2a - x)\frac{(x - 2a)}{2}x = -\frac{pa^4}{24}$$

$$\int M^P m dx = -\frac{5}{48}pa^4 \tag{14-23a}$$

Likewise the denominator yields

$$\int (m^2)dx = \int_0^a (m^2)dx + \int_a^{2a} (m^2)dx$$

$$\int_0^a (m^2)dx = \int_0^a \frac{x^2}{4}dx = \frac{a^3}{12}$$

$$\int_a^{2a} \frac{(x-2a)^2}{4} dx = \frac{a^3}{12}$$

$$\int (m^2) dx = \frac{a^3}{6} \tag{14-23b}$$

The redundant reaction is obtained as

$$R = R_2 = -\left(\frac{-5pa^4}{48}\right) \Big/ \left(\frac{a^3}{6}\right) = \frac{5pa}{8} \tag{14-24}$$

The internal forces are obtained by treating the redundant reaction as an additional load in the determinate basis structure. The reactions, because of the redundant force, is obtained as

$$RR_1^m = RR_3^m = -\frac{R}{2} = -\frac{5pa}{16} \tag{14-25a}$$

The reactions for the indeterminate beam are obtained by adding the response due to the load and the redundant force.

$$R_1 = R_1^P + RR_1^m = \frac{3}{4}pa - \frac{5}{16}pa = \frac{7}{16}pa \tag{14-25b}$$

$$R_2 = R = \frac{5}{8}pa \tag{14-25c}$$

$$R_3 = R_3^P + RR_3^m = \frac{pa}{4} - \frac{5}{16}pa = -\frac{1}{16}pa \tag{14-25d}$$

The three reactions add up to the applied load ($R_1 + R_2 + R_3 = pa$). The external load applied to the first span has a tendency to lift the second support at node 3, resulting in a negative reaction ($R_3 = -pa/16$). The moment and shear force in the indeterminate beam are obtained as

Span (1−2)

$$M(x) = M^P + mR = \frac{3}{4}pax - \frac{1}{2}px^2 - \frac{5}{16}pax$$

$$M(x) = \frac{px}{16}(7a - 8x) \tag{14-25e}$$

$$V(x) = -\frac{7pa}{16} + px = p\left(x - \frac{7}{16}a\right) \tag{14-25f}$$

Span (2−3)

$$M(x) = \frac{pa}{4}(2a - x) + \frac{5}{16}pa(x - 2a)$$

$$M(x) = \frac{pa}{16}(x - 2a) \tag{14-25g}$$

$$V(x) = R_3 = -\frac{pa}{16} \tag{14-25h}$$

Step 4—Calculation of Displacement

Castigliano's theorem is applied to calculate a displacement component in the beam. A unit load is applied at the location and in the direction of desired displacement in the basis determinate structure. For the beam problem the unit load is applied in the transverse direction at the span location ($7a/16$) from the support node 1, as shown in Fig. 14-5*b*. The corresponding reactions are ($R_1^d = -25/32$ and $R_3^d = -7/32$). The moment functions ($m^d(x)$) for the two span segments are obtained as

$$\text{Span segment}\left(0 - \frac{7a}{16}\right)$$

$$m^d = -\frac{25}{32}x$$

$$\text{Span segment}\left(\frac{7}{16}a - 2a\right)$$

$$m^d = -\frac{7}{32}(2a - x) \tag{14-26}$$

The displacement (δ_A) at A is obtained as

$$\delta_A = \int \frac{Mm^d dx}{EI} \tag{14-27a}$$

The moment M is discontinuous at ($x = a$). Likewise, the dummy moment m^d is discontinuous at ($x = 7a/16$). Both discontinuities are accounted for by evaluating the integral separately for three span segments ($0 - 7a/16$), ($7a/16 - a$), and ($a - 2a$).

$$\int \frac{Mm^d}{EI}dx = \int_0^{7a/16} \frac{Mm^d}{EI}dx + \int_{7/16}^{a} \frac{Mm^d}{EI}dx + \int_a^{2a} \frac{Mm^d}{EI}dx$$

$$\int_0^{7a/16} \frac{px}{16EI}(7a - 8x)\left(-\frac{25x}{32}\right)dx = -\frac{0.00596}{EI}pa^3$$

$$\int_{7a/16}^{a} \frac{px}{16EI}(7a - 8x)\left(-\frac{7}{32}\right)(2a - x)dx = -\frac{0.00769}{EI}pa^3$$

$$\int_a^{2a} \frac{pa}{16EI}(x - 2a)\left(\frac{-7}{32}\right)(2a - x)dx = +\frac{0.00456pa^3}{EI}$$

$$\delta_A = \frac{pa^3}{EI}(0.00596 + 00769 - 0.00456) = -\frac{0.0091pa^3}{EI} \tag{14-27b}$$

Displacement (δ_A) follows the load direction, which is along the negative y-coordinate.

14.3 Method of Redundant Force for a Shaft

An indeterminate shaft made of a single material with shear modulus (G) is shown in Fig.14-6*a*. Its first segment has length (a) and polar moment of inertia J_1. The second segment also has length (a) but its polar moment of inertia is J_2. It is subjected to a load (T^0) at the center span. Calculate the internal torque and the angle of twist at the midspan.

The equations developed for the indeterminate truss can be used for shafts with the following two modifications:

1. Internal force (F) should be replaced by torque (T).
2. The flexibility coefficients should be redefined in terms of polar moment of inertia (J) and shear modulus (G) as ($g = \ell/JG$), instead of bar flexibility ($g^{bar} = \ell/AE$).

The shaft is separated into two members with three nodes. A basis structure is obtained by realizing the fixed condition at node 3 as shown in Fig. 14-6*b*. The basis shaft is subjected to the external load at node 2. It is subjected to a unit torque ($T = 1$) at node 3 as shown in Fig. 14-6*c*. Table 14-2, which is similar to Table 14-1, is prepared from the following information:

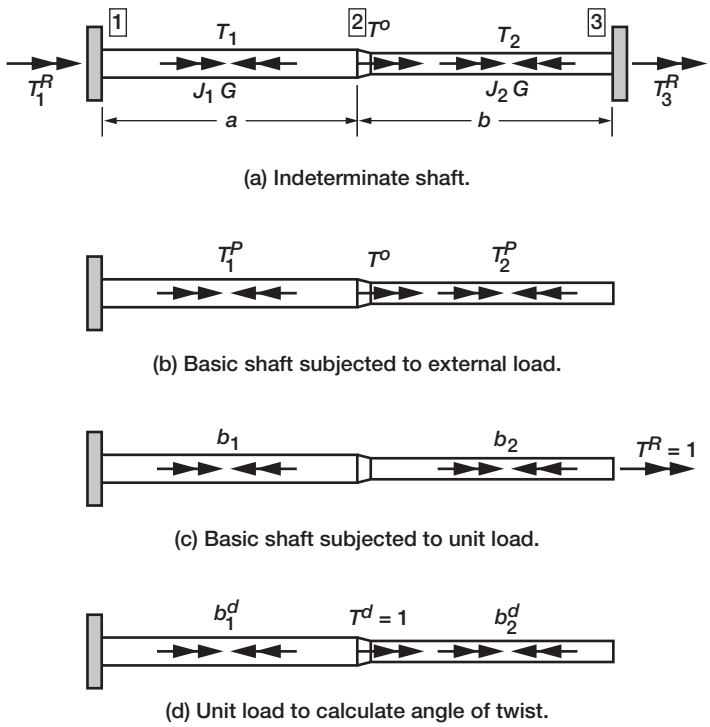

FIGURE 14-6 *Analysis of shaft using redundant force method.*

TABLE 14-2 Method of Redundant Force for a Shaft

Member No. (i)	$g_i = (\ell/JG)_i$	T_i^P	b_i	b_i^2	$T_i^P b_i g_i$	$b_i^2 g_i$
1	a/J_1G	T^0	1	1	aT^0/J_1G	a/J_1G
2	a/J_2G	0	1	1	0	a/J_2G
Σ	–	–	–	–	aT^0/J_1G	$a/G(1/J_1 + 1/J_2)$

a. Flexibility coefficients of the two shaft segments are ($g_1 = a/J_1G$ and $g_2 = a/J_2G$).
b. The internal torque for the two shaft segments shown in Fig. 14-6*b* for external load is obtained by inspection as ($T_1^P = T^0$ and $T_2^P = 0$).
c. The internal torque for the two shaft segments shown in Fig. 14-6*c* for unit load is obtained by inspection as ($b_1 = 1$ and $b_2 = 1$).

The redundant reaction (T_3^R) at node 3 is obtained by modifying the formula given by Eq. (14-7*a*) as

$$T_3^R = -\frac{\sum_{i=1}^{2}\left(T_i^P b_i g_i\right)}{\sum_{i=1}^{2}\left(b_i^2 g_i\right)}$$

$$R = -\frac{\text{sum of 6th column in Table 14-2}}{\text{sum of 7th column in Table 14-2}} \tag{14-28a}$$

The redundant force (R) which is equal to the reaction (T_3^R) at node 3 is obtained as

$$R = T_3^R = -\frac{\left(\dfrac{T_o}{J_1}\right)}{\left(\dfrac{1}{J_1} + \dfrac{1}{J_2}\right)} = -\left(\frac{J_2}{J_1 + J_2}\right)T_0 \tag{14-28b}$$

Other force parameters, such as reaction (T_1^R) at node 1 and the internal torques (T_1 and T_2) are back-calculated from equilibrium equations.

$$T_1^R + T^0 + T_3^R = 0$$

$$T_1^R = -T^0 - T_R^3 = \left(\frac{J_2}{J_1 + J_2} - 1\right)T_0$$

$$T_1 = -T_R^1 = \left(1 - \frac{J_2}{J_1 + J_2}\right)T_0$$

$$T_2 = T_R^3 = -\frac{J_2}{(J_1 + J_2)}T_0$$

for

$$
\begin{aligned}
&(J_1 = J_2 = J)\\
&T_3^R = -\frac{T_0}{2}\\
&T_1^R = -\frac{T_0}{2}\\
&T_1 = -T_R^1 = \frac{T_0}{2}\\
&T_2 = T_R^3 = -\frac{T_0}{2}
\end{aligned}
\tag{14-28c}
$$

Calculation of Angle of Twist

The formula for truss, given by Eq. (14-9), is modified to calculate the angle of twist at a location (n_1) and direction (d_1) for a shaft.

$$
\varphi_{n1d1} = \frac{\partial U}{\partial T_{n_1 d_1}} = \sum_{i=1}^{n} \frac{T_i \ell_i}{J_i G_i} b_{in_1 d_1} \tag{14-29a}
$$

For the shaft the angle of twist (φ_c) is

$$
\varphi_c = \frac{a}{G}\left(\frac{T_1 b_1^d}{J_1} + \frac{T_2 b_2^d}{J_2}\right) \tag{14-29b}
$$

The internal torques ($b_1^d = 1, b_2^d = 0$) for a unit torque applied at node 2, as shown in Fig. 14-6*d*, is obtained by inspection and the twist angle becomes

$$
\begin{aligned}
&b_1^d = 1 \quad \text{and} \quad b_2^d = 0\\
&\varphi_c = \frac{a}{GJ_1}\left(1 - \frac{J_2}{J_1 + J_2}\right) T_0\\
&\varphi_c = \frac{a}{G(J_1 + J_2)} T_0
\end{aligned}
\tag{14-29c}
$$

for

$$
\begin{aligned}
&J_1 = J_2 = J\\
&\varphi_c = \frac{aT_0}{2GJ}
\end{aligned}
\tag{14-29d}
$$

14.4 Analysis of a Beam Supported by a Tie Rod

Superposition principle and the concept of redundant force are combined to solve a beam supported by a tie rod as shown in Fig. 14-7*a*. The structure is made of two member types:

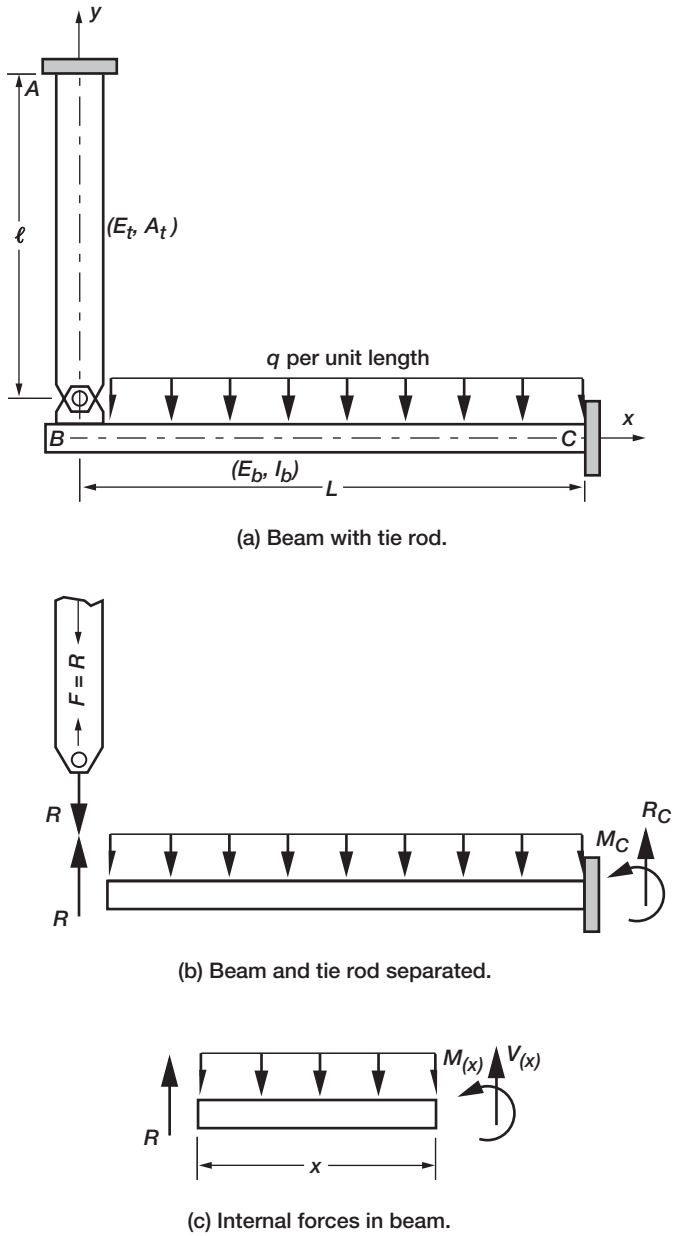

FIGURE 14-7 *Beam supported by a tie rod.*

a bar or tie rod and a beam. The concept of superposition is illustrated through this example. The steel beam of length L, modulus E_b and moment of inertia I_b is fixed at C. It is subjected to a uniformly distributed load of intensity q per unit length. The tie rod is made of aluminum

and it has a cross-sectional area A_t, modulus of elasticity E_t, and length ℓ. Calculate the internal forces and transverse displacement (δ_B) at location B.

The structure has three force unknowns ($n = 3$) consisting of two forces for the beam and one tie rod force. It is restrained at A and C but node B can displace and rotate, or ($m = 2$). The structure is one-degree indeterminate ($r = n - m = 1$). The structure is separated into a beam and a tie rod as shown in Fig. 14-7*b*. The tie rod considered as the redundant member with its internal force ($F = R$). The cantilever beam CB is subjected to load (q), and redundant force (R). The solution to this problem is obtained by equating the transverse displacement of beam (δ_{beam}) to the axial displacement ($\delta_{tie-rod}$) of the tie rod ($\delta_{beam} = \delta_{tie-rod} = \delta_B$). The rotational displacement at node B is unrestricted. The beam displacement is obtained for two load cases: external load q and redundant force R. For the uniform load (q) the displacement (δ_{beam-q}) is obtained using the cantilever formula. The displacement is negative because of gravity load.

$$\delta_{beam-q} = -\frac{qL^4}{8E_bI_b} \tag{14-30a}$$

For the redundant force (R) the displacement (δ_{beam-R}) is obtained as

$$\delta_{beam-R} = \frac{RL^3}{3E_bI_b} \tag{14-30b}$$

Superposition of the two equations yields the beam displacement for simultaneous action of loads (q and R).

$$\delta_{beam} = \frac{L^3}{E_bI_b}\left(\frac{R}{3} - \frac{qL}{8}\right) \tag{14-30c}$$

The tie rod displacement ($\delta_{tie-rod}$) is calculated for an internal force (R). The tie rod expands because of tension, but it produces a negative displacement with reference to the beam axis, which is the x-coordinate axis.

$$\delta_{tie\ rod} = -\frac{R\ell}{A_tE_t} \tag{14-30d}$$

The displacement continuity condition ($\delta_{beam} = \delta_{tie-rod} = \delta_B$) can be written as

$$\frac{L^3}{E_bI_b}\left(\frac{R}{3} - \frac{qL}{8}\right) = -\frac{R\ell}{A_tE_t} \tag{14-30e}$$

The reaction is obtained as

$$R\left(\frac{L^3}{3E_bI_b} + \frac{\ell}{A_tE_t}\right) = \frac{qL^4}{8E_bI_b}$$

$$R = \frac{qL^4}{8E_bI_b\left(\dfrac{L^3}{3E_bI} + \dfrac{\ell}{A_tE_t}\right)} \tag{14-30f}$$

The internal force in the tie rod is equal to the redundant force.

$$F = R \tag{14-30g}$$

The bending moment $M(x)$ and shear force $V(x)$ at a location x in the beam span are

$$\begin{aligned} M(x) &= xR - \frac{qx^2}{2} \\ V(x) &= -R + qx \end{aligned} \tag{14-30h}$$

The transverse displacement at B (δ_B) is obtained as

$$\delta_b = \delta_{\text{tie rod}} = \frac{-R\ell}{A_tE_t} \tag{14-30i}$$

The response of the structure is calculated for the following numerical values: $E_b = 200\,\text{GPa}$, $E_t = 70\,\text{GPa}$, $L = 3\,\text{m}$, $\ell = 7.5\,\text{m}$, $I_b = 10 \times 10^6\,\text{mm}^4$, $A_t = 100\,\text{mm}^4$, $q = 12\,\text{kN/m}$. The value of the redundant force, which is equal to the internal force in the tie rod is

$$R = F = 9.145\,\text{kN} \tag{14-31a}$$

The reactions (R_C and M_C) at the support C are

$$R_c = V(x = \ell) = 26.855\,\text{kN} \tag{14-31b}$$

$$M_c = -26.565\,\text{kN-m} \tag{14-31c}$$

The transverse displacement at B is

$$\delta_b = -9.798\,\text{mm} \tag{14-31d}$$

14.5 IFM Solution to the Beam Supported by a Tie Rod Problem

Beam supported by a tie rod is a good example to illustrate the calculation of deformations in a composite structure made of different member types, such as a beam and a bar. This is illustrated through IFM solution because this method uses deformation calculations.

Step 1—Formulate the Equilibrium Equations

For the problem consider the three unknowns as: two reactions (R_C and M_C) at the support C and internal bar force ($F = R_B = R$) as shown in Fig. 14-7b. Two EE are written at B. The transverse EE along the v-direction yields

$$R_B + R_C - qL = 0 \tag{14-32a}$$

The rotational EE along θ direction at B is:

$$M_C + R_C L - \frac{qL^2}{2} = 0 \tag{14-32b}$$

The EE in matrix notation can be written as

$$\begin{bmatrix} -1 & -1 & 0 \\ 0 & -L & -1 \end{bmatrix} \begin{Bmatrix} R_B \\ R_C \\ M_C \end{Bmatrix} = \begin{Bmatrix} -qL \\ -\dfrac{qL^2}{2} \end{Bmatrix} \tag{14-32c}$$

Since three force unknowns (R, R_C, and M_C) are expressed in terms of two EE; one compatibility condition is required for the determination of the internal forces.

Step 2—Derive the Deformation Displacement Relations

The DDR ($\{\beta\} = [B]^T\{X\}$) has the following form:

$$\begin{aligned} \beta_R &= -v \\ \beta_C &= -v - L\theta \\ \beta_M &= -\theta \end{aligned} \tag{14-32d}$$

The deformations (β_R,β_C,β_M) correspond to the force variables (R, R_C, M_C), respectively. At node B the transverse displacements is v and rotation is θ. Displacements (v, θ) are the dual variables of the transverse and rotational EE, respectively. The DDR calculation is identical to that of other structures.

Step 3—Generate the Compatibility Conditions

The single CC is obtained by eliminating the two displacements from the three DDR.

$$\beta_R - \beta_C + L\beta_M = 0$$

The CC in matrix notation can be written as

$$\begin{bmatrix} 1 & -1 & L \end{bmatrix} \begin{Bmatrix} \beta_R \\ \beta_C \\ \beta_M \end{Bmatrix} = \{0\} \tag{14-32e}$$

The null property ($[B][C]^T = [0]$) of the EE and CC matrices is verified as

$$\begin{bmatrix} -1 & -1 & 0 \\ 0 & -L & -1 \end{bmatrix} \begin{bmatrix} 1 \\ -1 \\ L \end{bmatrix} = \begin{bmatrix} 0 \\ 0 \end{bmatrix} \tag{14-32f}$$

Step 4—Formulate the Force Deformation Relationship

Deformation is derived as the derivative of the strain energy with respect to the internal force variable as

$$\beta = \frac{\partial U}{\partial F} \tag{14-33a}$$

The strain energy has contributions from moment (M) and axial force (F).

$$U = \int_0^L \frac{M^2}{2E_b I_b}\, dx + \int_0^\ell \frac{F^2}{2E_t A_t} dy \tag{14-33b}$$

The three deformation components corresponding to force variables $R(\beta_R)$, $R_C(\beta_C)$, and M_C are obtained as the partial derivatives.

$$\beta_R = \frac{\partial U}{\partial R} = \frac{1}{E_b I_b}\int_0^L M\frac{\partial M}{\partial R}\, dx + \frac{1}{E_t A_t}\int_0^\ell F\frac{\partial F}{\partial R}\, dy \tag{14-33c}$$

$$\beta_C = \frac{\partial U}{\partial R_C} = \frac{1}{E_b I_b}\int_0^L M\frac{\partial M}{\partial R_C}\, dx + \frac{1}{E_t A_t}\int_0^\ell F\frac{\partial F}{\partial R_C}\, dy \tag{14-33d}$$

$$\beta_M = \frac{\partial U}{\partial M_C} = \frac{1}{E_b I_b}\int_0^L M\frac{\partial M}{\partial M_C}\, dx + \frac{1}{E_t A_t}\int_0^\ell F\frac{\partial F}{\partial M_C}\, dy \tag{14-33e}$$

The deformation has contribution from the beam (term 1) and tie rod (term 2).

The partial derivatives are calculated for the moment $M(x)$ at location x as shown in Fig. 14-7c.

$$M(x) = xR - \frac{qx^2}{2} \tag{14-34a}$$

$$\begin{aligned}
\frac{\partial M}{\partial R} &= x \\
\frac{\partial M}{\partial R_C} &= 0 \\
\frac{\partial M}{\partial M_C} &= 0 \\
\frac{\partial F}{\partial R} &= 1 \text{ since } F = R \\
\frac{\partial F}{\partial R_C} &= \frac{\partial F}{\partial M_C} = 0
\end{aligned} \tag{14-34b}$$

The deformations are obtained as

$$\beta_R = \frac{1}{E_b I_b}\int_0^L \left(xR - \frac{qx^2}{2}\right) x\, dx + \frac{1}{E_t A_t}\int_0^\ell R\, dy$$

$$\beta_R = \frac{L^3}{E_b I_b}\left(\frac{R}{3} - \frac{qL}{8}\right) + \frac{R\ell}{E_t A_t}$$
$$\beta_C = \beta_M = 0 \tag{14-35}$$

The deformations ($\beta_C = \beta_M = 0$) are zero because these correspond to the support reactions (R_C and M_C). The deformation (β_R) has three components that correspond to reaction R, load q and contribution from the tie rod. The deformation obtained as the partial derivative of the strain energy with respect to internal force is recommended for composite structures.

Step 5—Express the Compatibility Condition in Terms of Forces

The CC in forces has the following form.

$$\begin{bmatrix} \frac{L^3}{3E_b I_b} + \frac{\ell}{A_t E_t} & 0 & 0 \end{bmatrix} \begin{Bmatrix} R \\ R_C \\ M_C \end{Bmatrix} = \frac{qL^4}{8E_b I_b} \tag{14-36a}$$

The compatibility condition became a nonhomogeneous equation because of the uniformly distributed load (q).

Step 6—Couple EE and CC to Obtain IFM Equation and Solve for Forces

IFM equation for the problem has the following form.

$$\begin{bmatrix} & -1 & -1 & 0 \\ & 0 & -L & -1 \\ \frac{L^3}{3E_b I_b} + \frac{\ell}{A_t E_t} & & 0 & 0 \end{bmatrix} \begin{Bmatrix} R_B \\ R_C \\ M_C \end{Bmatrix} = \begin{Bmatrix} -qL \\ -\frac{qL^2}{2} \\ \frac{qL^4}{8E_b I_b} \end{Bmatrix} \tag{14-36b}$$

The solution to the IFM equation yields the forces

$$R_B = \frac{qL^4}{8E_b I_b\left(\frac{L^3}{3E_b I_b} + \frac{\ell}{A_t E_t}\right)}$$
$$R_C = q\left(L - \frac{L^4}{8E_b I_b\left(\frac{L^3}{3E_b I_b} + \frac{\ell}{A_t E_t}\right)}\right)$$
$$M_C = -\frac{qL^2}{2} + \frac{qL^5}{8E_b I_b\left(\frac{L^3}{3E_b I_b} + \frac{\ell}{A_t E_t}\right)} \tag{14-36c}$$

Step 7—Back-Calculate the Displacement from the DDR

The transverse displacement at the hinge point is calculated as

$$v = -\beta_R = -\frac{1}{E_b I_b}\left(\frac{R_B}{3} - \frac{qL}{8}\right) - \frac{R_B \ell}{A_t E_t} \tag{14-36d}$$

The axial displacement $v^{\text{tie rod}}$ for the tie rod can be determined from its deformation

$$\beta_1^{\text{tie rod}} = \frac{R_B \ell}{AE}$$

or

$$v^{\text{tie rod}} = -\frac{R_B \ell}{A_t E_t} \tag{14-36e}$$

Substitution of the numerical values yields the displacement $v^{\text{tie rod}} = -9.798\,\text{mm}$, which represents the stretching of the tie rod.

The transverse displacement for the beam can be calculated from its deformation

$$\beta_1^{\text{beam}} = \frac{1}{E_b I_b}\left(\frac{R_B L^3}{3} - \frac{qL^4}{4}\right)$$

or

$$v^{\text{beam}} = -\frac{1}{E_b I_b}\left(\frac{R_B L^3}{3} - \frac{qL^4}{4}\right) \tag{14-36f}$$

For the numerical values of the problem, the transverse beam displacement along the negative y-direction becomes

$$v^{\text{beam}} = -9.798\,\text{mm} \tag{14-36g}$$

The beam and tie rod deform in a consistent manner ($v^{\text{tie rod}} + v^{\text{beam}} = 0$), as expected.

14.6 Conjugate Beam Concept

The conjugate beam concept allows the calculation of displacement using the bending moment diagram, which is typically available to a designer. A scaled bending moment diagram (or the curvature) is considered as the load on another beam, which is referred to as the conjugate beam. The scale factor used is the stiffness coefficient (EI). The word "conjugate" means "interchangeable." The conjugate beam concept adds nothing new to analysis methods but it is a useful technique especially suitable for hand calculation.

Consider the bending moment (M) and stiffness coefficient (EI) of the real beam. Load in the conjugate beam is obtained as the ratio of moment to stiffness as ($p = M/EI$). The parameters of the real beam and cognate beam are related through the following constraints

1. Slope (θ) of the real beam is equal to the shear force (V) in the conjugate beam.
2. Deflection (v) of the real beam is equal to the moment (M) in the conjugate beam.

The boundary conditions of the conjugate beam must be consistent to the relations (1 and 2). Real support conditions and the corresponding boundary in the conjugate beam are illustrated in Table 14-3.

TABLE 14-3 *Boundary Conditions Real and Conjugate Beams*

Real Beam	Conjugate Beam
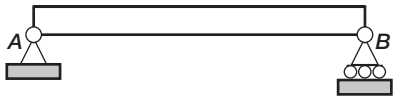 Simple supports	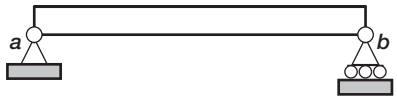 Simple supports
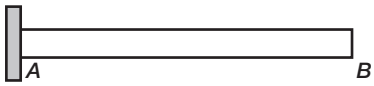 Fixed-free supports	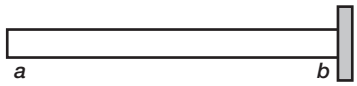 Free-fixed supports
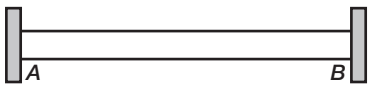 Fixed-fixed supports	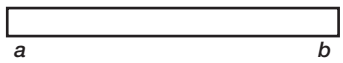 Free-free supports
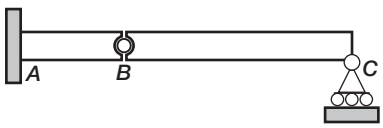 Fixed-pinned and simple supports	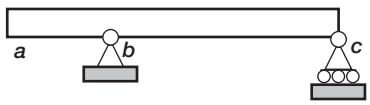 Free-simple and simple supports
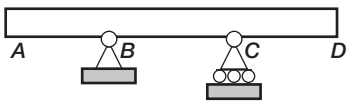 Free-simple–simple-free supports	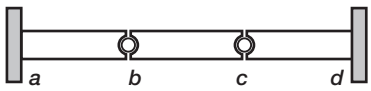 Fixed-pinned–pinned-fixed supports

1. A simple support remains the same between real beam and conjugate beam. The simple supports at A and B in the real beam remains the simple supports at a and b in the conjugate beam shown in the first row in Table 14-3. Slope at the simple support A becomes the shear force at location in the conjugate beam. The zero deflection condition at boundaries (A, B) are consistent with zero moment condition at boundary (a, b) of the conjugate beam.
2. A real fixed support becomes a free boundary in a conjugate beam. A boundary in the real beam has zero displacement; the conjugate beam should have zero moment, and a free end satisfies this. The nonzero moment condition in real beam is consistent with nonzero displacement in the conjugate beam. All fixed real supports become free condition in the conjugate beam, as shown in Table 14-3.

3. A real free support becomes a fixed boundary in a conjugate beam. This is the reverse of condition 2.
4. Zero displacement in the real beam becomes either a hinge or a free support in a conjugate beam. The real hinge at B in the fourth row in Table 14-3 becomes a simple support in the conjugate beam. Likewise, the internal hinges at B and C in the real beam in Table 14-3 transfer to hinge conditions in the conjugate beam.

The concept is illustrated through the solution of two simple examples.

(a) A Cantilever Beam The beam subjected to a point load (P) at its free load is shown in the Fig. 14-8a. It has length (ℓ) and a uniform stiffness coefficient (EI). Its bending moment diagram is shown in Fig. 14-8b. Moment at location x is $M(x) = -P(\ell - x)$. Calculate the deflection and slope at its free end using the conjugate beam concept.

The conjugate beam has a length (ℓ) and it is subjected to a load ($p = M/EI = -P(\ell - x)/EI$), applied in the negative (y) direction because the moment is negative, as shown in Fig. 14-8c. At the fixed boundary the moment is nonzero, which corresponds to nonzero displacement in conjugate beam. The nonzero shear force corresponds to nonzero slope in the conjugate beam. A real fixed support becomes a free support in the conjugate beam with nonzero displacement and slope. At the free boundary the moment is zero, which corresponds to zero displacement in the conjugate beam. The zero shear force corresponds to zero slope in the conjugate beam. A real free support becomes a fixed support in the conjugate beam with zero displacement and slope. The conjugate beam with the boundary conditions is shown in Fig. 14-8c. The shear force (V^a) at the support (b) in the conjugate is obtained as

$$V^a = -\frac{P\ell}{2AE} \cdot \ell = -\frac{P\ell^2}{2EI} = \theta_B \tag{14-37a}$$

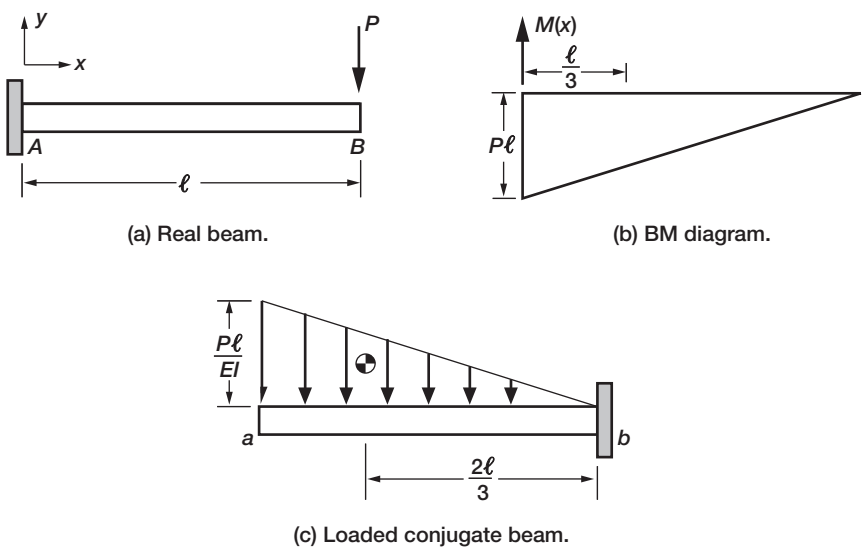

(a) Real beam.

(b) BM diagram.

(c) Loaded conjugate beam.

FIGURE 14-8 *Cantilever beam.*

Likewise, the bending moment (C) at the support (b) in the conjugate is obtained as

$$M^b = -\frac{P\ell^2}{2EI} \cdot \frac{2}{3}\ell = -\frac{P\ell^3}{3EI} = \delta_B \tag{14-37b}$$

The slope and deflection calculated by the conjugate beam technique are the solution to the real problem.

(b) A Simply Supported Beam The beam subjected to uniformly distributed load (q) is shown in Fig. 14-9a. It has length (ℓ) and a uniform stiffness coefficient (EI). Its bending moment diagram is shown in Fig. 14-9b. Calculate the deflection and slope at the beam midspan.

The conjugate beam has a length (ℓ) and it is subjected to a load ($p = M/EI$), applied in the positive (y) direction because the moment is positive, as shown in Fig. 14-9b. The bending moment diagram has a parabolic distribution. The moment function is ($M(x) = p\ell x(\ell - x)/2$). The integrated moment over the span is the total load (TL) in the conjugate beam ($TL = (2/3)(p\ell^2/8)(\ell) = p\ell^3/12$). The center of gravity of load for half-span from the beam center is ($\ell_c = 3\ell/16$). At a simply supported boundary the deflection is zero in the real beam, which corresponds to the zero moment condition in the conjugate beam. The real slope is nonzero, which corresponds to shear force in the conjugate beam. In other words, the boundary condition of the conjugate beam must reflect zero moment condition and nonzero shear force conditions, which is also a simple support. A simple support in a real beam corresponds to such a support in its conjugate counterpart.

The shear force (V^C) at the midspan location (C) in the conjugate is obtained as

$$V^C = -\frac{p\ell^3}{24} + \frac{p\ell^3}{24} = 0 = \theta_C$$

The slope at midspan is zero. This could have been ascertained from the condition of symmetry.

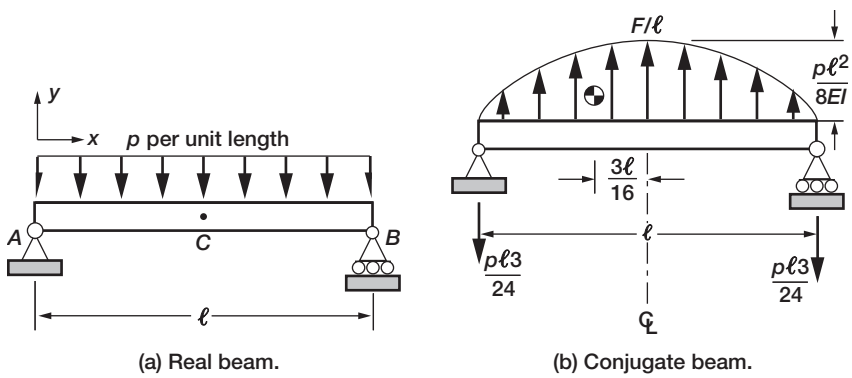

FIGURE 14-9 *Simply supported beam.*

Likewise the bending moment (M^C) at midspan location (C) in the conjugate is obtained as

$$M^C = -\frac{p\ell^3}{24} \cdot \frac{\ell}{2} + \frac{p\ell^3}{24} \cdot \frac{3\ell}{16} = -\frac{5p\ell^4}{384} = \delta_c \tag{14-38b}$$

The slope (θ_c) and deflection (δ_C) calculated by the conjugate beam technique are in agreement with the real solutions.

14.7 Principle of Superposition

Simple indeterminate problems can be analyzed through superposition technique. This technique bypasses the explicit use of the compatibility conditions. The problem is separated into determinate subproblems that can be solved without the compatibility conditions. The solution to an indeterminate problem is generated by adding the subproblem solutions. The superposition technique is illustrated by considering a beam as an example. A beam of length ℓ is fixed at both ends and is subjected to a uniformly distributed load of intensity q per unit length. The uniform beam with constant rigidity EI is shown in Fig. 14-10a. The free-body diagram of this beam is shown in Fig. 14-10b. Because of symmetry, the reactions are equal ($R_A = R_B$) and the transverse equilibrium equation yields their values:

$$R_A = R_B = R = \frac{q\ell}{2} \tag{14-39a}$$

Likewise, because of symmetry, the fixed-end moments at support A and B are equal ($M_A = M_B$), as shown in Fig. 14-10b:

$$M_A = M_B = M_r \tag{14-39b}$$

Analysis of the problem requires the determination of the single moment M_r. The superposition technique replaces the real structure with two determinate structures, which are shown in Figs. 14-10c and 14-10d. The first structure, shown in Fig. 14-10c, is a determinate structure subjected to the given external load q that produces a symmetrical rotation θ_1 at both support A and B. The second structure, shown in Fig. 14-10d, is the same determinate structure, but it is subjected to moment M_r, producing the symmetrical deformations θ_2.

The key idea of the superposition technique is to generate a solution to the original indeterminate problem by adding the two determinate solutions. For the problem, the superposition technique constrains the determinate slopes ($\theta_1 + \theta_2 = 0$) to zero to reinstate the fixed-end boundary conditions ($\theta = 0$). The superposition method has two steps. First, solutions are obtained for the two determinate subproblems shown in Figs. 14-10c and 14-10d. In the second step, the two determinate solutions are added to obtain the solution for the indeterminate problem.

Step 1—Determinate Solutions

The two determinate problems depicted in Figs. 14-10c and 14-10d can be solved from equilibrium considerations only.

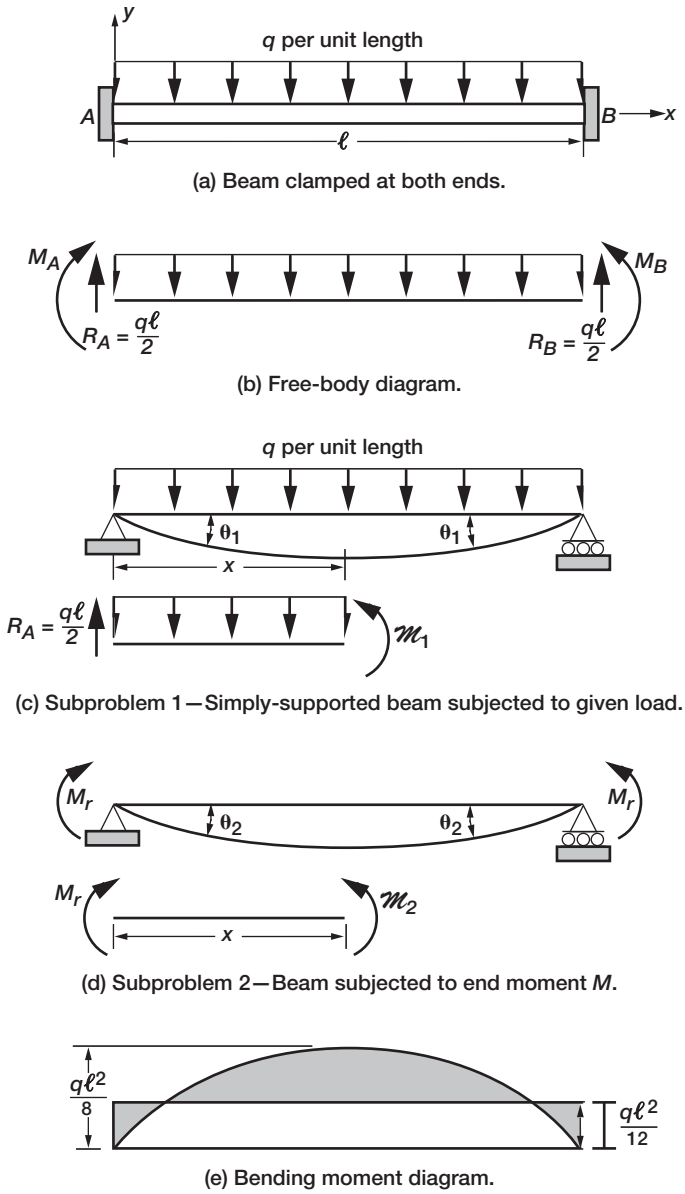

FIGURE 14-10 *Solution by superposition methods.*

Solution to First Determinate Subproblem

For the problem depicted in Fig. 14-10*c* the displacement function has the following form

$$w_1 = \left(\frac{q}{24EI}\right)(x)\left(2\ell x^2 - x^3 - \ell^3\right) \tag{14-39c}$$

The slope or rotation at A can be obtained as

$$\theta_1 = \left.\frac{dw_1}{dx}\right|_{x=0} = -\frac{q\ell^3}{24EI} \tag{14-39d}$$

Solution to Second Determinate Subproblem

Likewise, the second subproblem depicted in Fig. 14-10*d* is solved to obtain its displacement function as

$$w_2 = \frac{M_r}{2EI}\left(x^2 - \ell x\right) \tag{14-39e}$$

The slope or rotation at A can be obtained as

$$\theta_2 = \left.\frac{dw_2}{dx}\right|_{x=0} = -\frac{M_r\ell}{2EI} \tag{14-39f}$$

Step 2—Superposition of Determinate Solutions

The bending moment M_r is the only unknown of the beam, as shown under subproblem 2 in Fig. 14-10*d*. The superposition principle adjusts the bending moment M_r for subproblem 2 until the induced rotation θ_2 matches the rotation θ_1 in subproblem 1, producing the fixed-end condition with no rotation ($\theta = 0$) for the original problem. The superposition principle can be written mathematically as

$$\theta_1 + \theta_2 = \theta = 0$$

or

$$-\frac{q\ell^3}{24EI} - \frac{M_r\ell}{2EI} = 0$$

$$M_r = -\frac{q\ell^2}{12} = M \tag{14-39g}$$

The moment M obtained here is identical to the IFM solution. The bending moment diagram for the problem, which is obtained by superposing the two subproblem solutions, is shown in Fig. 14-10*e*.

The displacement function for the problem is obtained by adding the two responses for the two subproblems

$$w = w_1 + w_2 \quad \text{for} \quad M_r = -\frac{q\ell^2}{12}$$

$$w = \frac{q}{EI}\left(\frac{\ell x^3}{12} - \frac{\ell^2 x^2}{24} - \frac{x^4}{24}\right) \tag{14-39h}$$

The displacement function given by Eq. (14-39*h*) agrees with the IFM solution.

14.8 Navier's Table Problem

Structural indeterminacy was recognized by Navier (1785–1836) when he attempted to determine the four reactions (R_1, R_2, R_3, R_4) along the four legs of a table that was subjected to a concentrated load P with eccentricities e_x and e_y as shown in Fig. 14-11a. He assumed that the symmetrical table was made of wood and that it was resting on a level floor made of a rigid material, such as stone. The distances between the legs along the x- and y-directions were $2a$ and $2b$, respectively. Solve the problem for the reactions and displacements.

Step 0—Solution Strategy

For the table problem, the origin A of the coordinate system (x, y, z) is selected at the center of the table top. The reactions (R_1, R_2, R_3, R_4) are the four force unknowns, or $n = 4$. The problem has three equilibrium equations and three displacement variables (w, θ_x, θ_y)—shown in Figs. 14-11b, c, and d—which represent the dual variables of the three EE, or $m = 3$. The problem is one-degree indeterminate ($r = n - m = 1$). For the table problem, the reaction along the positive y-direction produces compression in the legs of the table as shown in Fig. 14-11a.

Step 1—Formulate the Equilibrium Equations

The three EE (the sum of the reactions, or $\Sigma V = 0$, and the sum of the moments along the x- and y-directions, or $\Sigma_x M = 0$ and $\Sigma_y M = 0$) can be written for the table problem as follows:

$$\begin{matrix} \Sigma_z V = 0 \\ \Sigma_x M = 0 \\ \Sigma_y M = 0 \end{matrix} \begin{bmatrix} -1 & -1 & -1 & -1 \\ a & a & -a & -a \\ -b & b & b & -b \end{bmatrix} \begin{Bmatrix} R_1 \\ R_2 \\ R_3 \\ R_4 \end{Bmatrix} = \begin{Bmatrix} -P \\ -e_y P \\ e_x P \end{Bmatrix}$$

$$\text{or} \quad [B]\{R\} = \{P\} \tag{14-40a}$$

where $[B]$ is the (3×4) equilibrium matrix, and $\{R\}$ and $\{P\}$ represent the four reactions and the three load components. The three EE are expressed in terms of four unknown reactions,

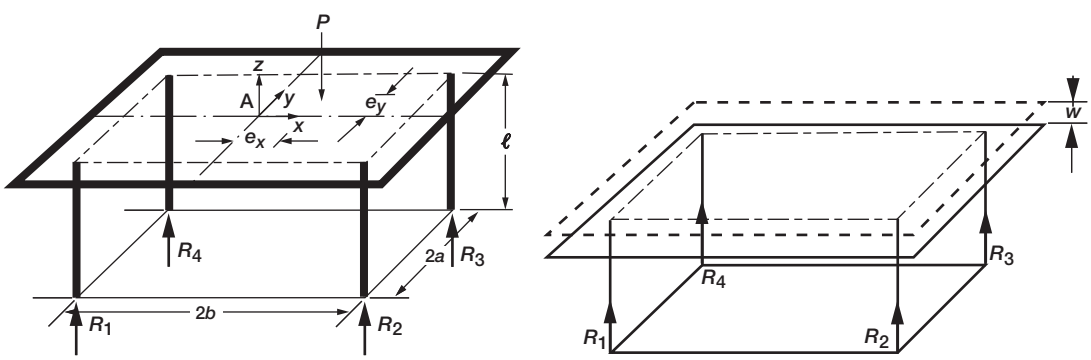

(a) Indeterminate table problem.

(b) Average displacement along z-axis.

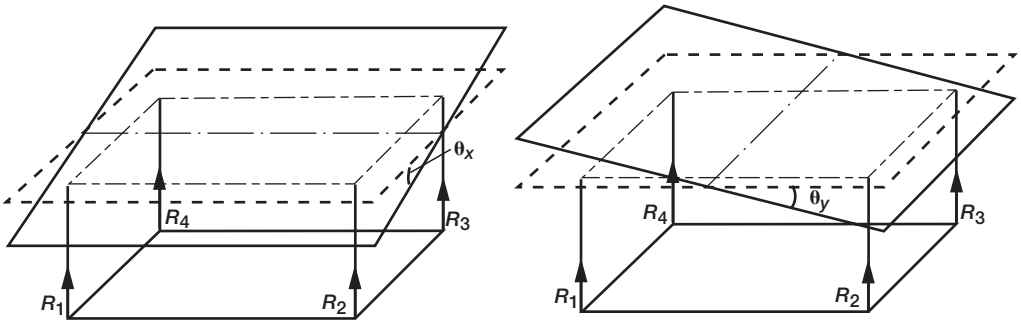

(c) Average tilt about x-axis. (d) Average tilt about y-axis.

FIGURE 14-11 *IFM introduced through Navier's table problem.*

so the table problem cannot be determined from the EE alone. Navier was the first to recognize the indeterminate nature of this problem, which is one-degree indeterminate. One CC is required for its solution.

Step 2—Derive the Deformation Displacement Relations

The DDR ($\{\beta\} = [B]^T\{X\}$) for the table problem can be written as

$$\begin{Bmatrix} \beta_1 \\ \beta_2 \\ \beta_3 \\ \beta_4 \end{Bmatrix} = \begin{bmatrix} -1 & a & -b \\ -1 & a & b \\ -1 & -a & b \\ -1 & -a & -b \end{bmatrix} \begin{Bmatrix} w \\ \theta_x \\ \theta_y \end{Bmatrix} \tag{14-40b}$$

where the four deformations (β_1, β_2, β_3, β_4) along the four legs of the table correspond to the four reactions (R_1, R_2, R_3, R_4), respectively. The three displacements $\{X\}$, which are the dual variables of the EE, represent one translation, w, along the z-direction, and two rotations, θ_x and θ_y, about the x- and y-axes, respectively.

Step 3—Generate the Compatibility Condition

The DDR contains four equations in terms of three displacements. In other words, the four deformations are not independent. One relation between the four deformations can be obtained by eliminating the three displacements from the four DDR

$$\beta_1 - \beta_2 + \beta_3 - \beta_4 = 0$$

or

$$\begin{bmatrix} 1 & -1 & 1 & -1 \end{bmatrix} \begin{Bmatrix} \beta_1 \\ \beta_2 \\ \beta_3 \\ \beta_4 \end{Bmatrix} = 0 \tag{14-40c}$$

Equation (14-40c) represents the deformation compatibility condition ($[C]\{\beta\}=\{0\}$) for the table problem. Like the EE, the CC is independent of the material of the structure.

The null property of the equilibrium and compatibility matrices ($[B][C]^T = [0]$) can be verified as

$$\begin{bmatrix} -1 & -1 & -1 & -1 \\ a & a & -a & -a \\ -b & b & b & -b \end{bmatrix} \begin{bmatrix} 1 \\ -1 \\ 1 \\ -1 \end{bmatrix} = \begin{bmatrix} 0 \\ 0 \\ 0 \end{bmatrix} \tag{14-40d}$$

Step 4—Formulate the Force Deformation Relations

The FDR for the problem can be written as

$$\begin{aligned} \beta_1 &= \frac{\ell R_1}{AE} \\ \beta_2 &= \frac{\ell R_2}{AE} \\ \beta_3 &= \frac{\ell R_3}{AE} \\ \beta_4 &= \frac{\ell R_4}{AE} \\ \text{or} \quad \frac{\ell}{AE} &= \frac{\beta_1}{R_1} = \frac{\beta_2}{R_2} = \frac{\beta_3}{R_3} = \frac{\beta_4}{R_4} = \text{constant} \end{aligned} \tag{14-40e}$$

where ℓ is the table height, A is the cross-sectional area of the legs, and E is the modulus of elasticity of the material of the table legs.

Step 5—Express the Compatibility Conditions in Terms of Forces

The CC in forces is obtained by eliminating deformations β in favor of reactions R as

$$\frac{\ell}{AE}(R_1 - R_2 + R_3 - R_4) = 0$$

$$\text{or} \quad \frac{\ell}{AE}\begin{bmatrix} 1 & -1 & 1 & -1 \end{bmatrix} \begin{Bmatrix} R_1 \\ R_2 \\ R_3 \\ R_4 \end{Bmatrix} = 0 \tag{14-40f}$$

Step 6—Couple the Equilibrium Equations and Compatibility Conditions to Obtain the IFM Equations, and Solve for Forces

$$\begin{bmatrix} -1 & -1 & -1 & -1 \\ a & a & -a & -a \\ -b & b & b & -b \\ 1 & -1 & 1 & -1 \end{bmatrix} \begin{Bmatrix} R_1 \\ R_2 \\ R_3 \\ R_4 \end{Bmatrix} = \begin{Bmatrix} -P \\ -e_y P \\ e_x P \\ 0 \end{Bmatrix} \tag{14-40g}$$

In the homogeneous CC given by the fourth equation in Eq. (14-40g), ($\ell/AE = 1$) is set to unity. Solution of Eq. (14-40g) yields the forces:

$$\begin{Bmatrix} R_1 \\ R_2 \\ R_3 \\ R_4 \end{Bmatrix} = \frac{P}{4}\begin{Bmatrix} 1 - r_x - r_y \\ 1 + r_x - r_y \\ 1 + r_x + r_y \\ 1 - r_x + r_y \end{Bmatrix} = \frac{P}{4}\begin{Bmatrix} 1 \\ 1 \\ 1 \\ 1 \end{Bmatrix}_{r_x = r_y = 0} \tag{14-40h}$$

where $r_x = e_x/b$ and $r_y = e_y/a$.

When the load is placed at the center of the table, $r_x = r_y = 0.0$, then each leg carries one-quarter of the load.

$$R_1 = R_2 = R_3 = R_4 = \frac{P}{4} \tag{14-40i}$$

Step 7—Back-Calculate the Displacement, if Required, from the Deformation Displacement Relations

Once internal forces are known, displacements can be calculated by back-substitution in the DDR and the FDR.

$$\begin{aligned} w &= -\left(\frac{\beta_1 + \beta_2 + \beta_3 + \beta_4}{4}\right) = -\frac{\ell}{4AE}(R_1 + R_2 + R_3 + R_4) = -\frac{P\ell}{4AE} \\ \theta_x &= \left(\frac{\beta_1 + \beta_2 - \beta_3 - \beta_4}{4a}\right) = \frac{\ell}{4AEa}(R_1 + R_2 - R_3 - R_4) = -\frac{P\ell e_y}{4AEa^2} \\ \theta_y &= -\left(\frac{\beta_1 - \beta_2 - \beta_3 + \beta_4}{4b}\right) = -\frac{\ell}{4AEb}(R_1 - R_2 - R_3 + R_4) = \frac{P\ell e_x}{4AEb^2} \end{aligned} \tag{14-40j}$$

When the load is placed at the center of the table ($r_x = r_y = 0$), the average displacements become

$$\begin{pmatrix} w \\ \theta_x \\ \theta_y \end{pmatrix}_{r_x = r_y = 0} = \frac{P}{4}\begin{Bmatrix} -\frac{\ell}{AE} \\ 0 \\ 0 \end{Bmatrix} \tag{14-40k}$$

The three displacements—uniform displacement (w) along the transverse direction and two rotations (θ_x, θ_y)—are depicted in Figs. 14-11b, c, and d.

The transverse displacement (w) is along the negative y-direction, which also represents the load direction. Likewise, the rotations (θ_x, θ_y) are along the negative (clockwise) and positive (counterclockwise) directions, respectively (see Figs. 14-11a, b, and c).

In the solution of the table problem, the tabletop is assumed to be rigid, which can be readily visualized by an examination of the displacements given by Eq. (14-41*j*) and Figs. 14-11*b*, *c*, and *d*. The assumption limits the scope of the analysis to a certain extent.

14.9 A Ring Problem

A uniform circular ring of radius R, moment of inertia I, and Young's modulus E is subjected to self-equilibrating forces as shown in Fig. 14-12*a*. Determine the bending moment, axial force, and vertical displacement at A.

Step 0—Solution Strategy

For the ring, the polar coordinates ($r = R$, θ) shown in Fig. 14-12*a* are used. Only half of the ring needs to be considered because of symmetry. The free-body diagram of the half ring is shown in Fig. 14-12*b*. The internal forces acting on the ring depicted in Fig. 14-12*b* at location B are the normal force N_B, shear force V_B, and moment M_B; and at location A they are the normal force N_A, shear force $V_A = P/2$, and moment M_A. The value for $V_A = P/2$ is obtained from equilibrium considerations (see Fig. 14-12*c*). There are five unknown forces (N_A, M_A, N_B, V_B, M_B) but only three EE ($\Sigma N = 0$, $\Sigma V = 0$, $\Sigma M = 0$) can be written, so the problem is two-degrees indeterminate.

Step 1—Formulate the Equilibrium Equations

The three EE are as follows:

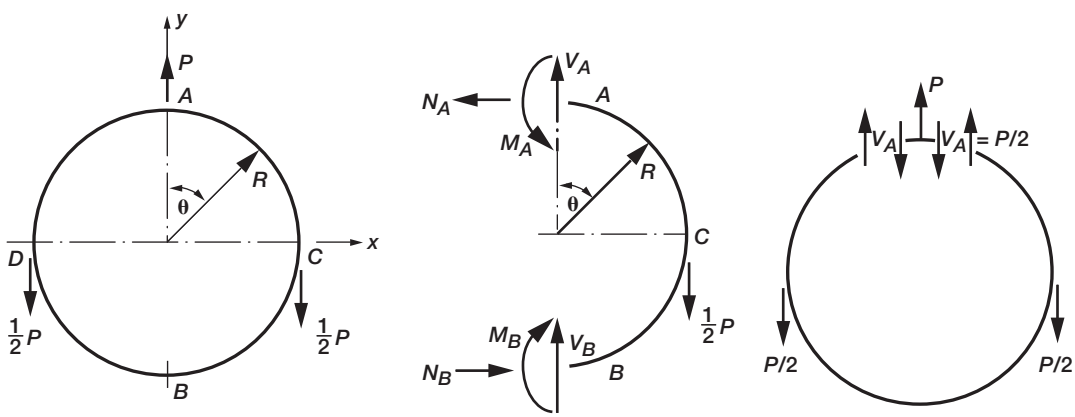

(a) Loads in a ring of radius *R*. (b) Free-body diagram for half ring. (c) Transverse *EE* at *A*.

FIGURE 14-12 *Ring problem.*

$$\begin{aligned}
&\sum_x N = 0 && N_B - N_A = 0 \quad \text{or} \quad N_A = N_B \\
&\sum_y V = 0 && V_B - \frac{P}{2} + \frac{P}{2} = 0 \quad \text{or} \quad V_B = 0 \\
&\sum M = 0 \text{ at } A && M_A - \frac{PR}{2} - M_B + N_B(2R) = 0
\end{aligned} \tag{14-41a}$$

The first two EE ($\Sigma N = 0$ and $\Sigma V = 0$) are trivial in nature. The moment EE in matrix notation can be written as follows

$$\begin{bmatrix} -1 & -2R & 1 \end{bmatrix} \begin{Bmatrix} M_A \\ N_A \\ M_B \end{Bmatrix} = \left\{ -\frac{PR}{2} \right\} \tag{14-41b}$$

Two CC are required for the determination of forces. Rotation φ is considered to be the dual, or displacement, variable of the EE.

Step 2—Derive the Deformation Displacement Relations

The three DDR for the problem are

$$\begin{aligned}
\beta_1 &= -\varphi \\
\beta_2 &= -2R\varphi \\
\beta_3 &= \varphi
\end{aligned} \tag{14-41c}$$

The deformations (β_1, β_2, β_3) correspond to the forces (M_A, N_B, M_B), respectively.

Step 3—Generate the Compatibility Conditions

Two CC are obtained by eliminating the rotation φ from the three DDR:

$$\begin{aligned}
\beta_2 - 2R\beta_1 &= 0 \\
\beta_2 + 2R\beta_3 &= 0
\end{aligned} \tag{14-41d}$$

In matrix notation, the CC can be written as

$$\begin{bmatrix} -2R & 1 & 0 \\ 0 & 1 & 2R \end{bmatrix} \begin{Bmatrix} \beta_1 \\ \beta_2 \\ \beta_3 \end{Bmatrix} = \begin{Bmatrix} 0 \\ 0 \end{Bmatrix} \tag{14-41e}$$

The null property of the $[B]$ and $[C]$ matrices ($[B][C]^T = [0]$) can be verified as

$$\begin{bmatrix} -1 & -2R & 1 \end{bmatrix} \begin{bmatrix} -2R & 0 \\ 1 & 1 \\ 0 & 2R \end{bmatrix} = \begin{bmatrix} 0 & 0 \end{bmatrix} \tag{14-41f}$$

Step 4—Formulate the Force Deformation Relations
The FDR for the ring can be determined as

$$\beta_1 = \frac{R}{EI}\int_0^{\pi} \mathcal{M}\frac{\partial \mathcal{M}}{\partial M_A}d\theta$$
$$\beta_2 = \frac{R}{EI}\int_0^{\pi} \mathcal{M}\frac{\partial \mathcal{M}}{\partial N_A}d\theta$$
$$\beta_3 = \frac{R}{EI}\int_0^{\pi} \mathcal{M}\frac{\partial \mathcal{M}}{\partial M_B}d\theta \tag{14-41g}$$

The bending moment for the problem can be defined in ranges AC and CB as follows

$$\mathcal{M}(\theta) = M_A + N_A R(1-\cos\theta) - \frac{PR}{2}\sin\theta \quad \left(\text{in the range } AC,\ 0 \le \theta \le \frac{\pi}{2}\right)$$
$$\mathcal{M}(\theta) = M_A + N_A R(1-\cos\theta) - \frac{PR}{2} \quad \left(\text{in the range } CB,\ \frac{\pi}{2} \le \theta \le \pi\right)$$
$$\frac{\partial \mathcal{M}}{\partial M_A} = 1 \quad (\text{for both ranges}, 0 \le \theta \le \pi)$$
$$\frac{\partial \mathcal{M}}{\partial N_A} = R(1-\cos\theta) \quad (\text{for both ranges}, 0 \le \theta \le \pi)$$
$$\frac{\partial \mathcal{M}}{\partial M_B} = 0 \quad (\text{for both ranges}, 0 \le \theta \le \pi) \tag{14-41h}$$

$$\beta_1 = \frac{R}{EI}\left[\int_0^{\pi/2}\left\{M_A + N_A R(1-\cos\theta) - \frac{PR}{2}\sin\theta\right\}(1)d\theta + \int_{\pi/2}^{\pi}\left\{M_A + N_A R(1-\cos\theta) - \frac{PR}{2}\right\}(1)d\theta\right] \tag{14-41i}$$

$$\text{or} \quad \beta_1 = \frac{R}{EI}\left\{\pi M_A + \pi R N_A - \frac{PR}{2}\left(1+\frac{\pi}{2}\right)\right\} \tag{14-41j}$$

Likewise, β_2 is obtained as

$$\beta_2 = \frac{R^2}{EI}\left\{\pi M_A + \frac{3\pi}{2}RN_A - \frac{PR}{4}(3+\pi)\right\}$$
$$\beta_3 = 0 \tag{14-41k}$$

Step 5—Express the Compatibility Conditions in Terms of Forces
Since $\beta_3 = 0$, the two CC in deformations become uncoupled equations as

$$\beta_1 = 0 \quad \text{and} \quad \beta_2 = 0 \tag{14-41l}$$

The CC in forces can be written as

$$\begin{bmatrix} \pi & \pi R & 0 \\ \pi & \frac{3\pi R}{2} & 0 \end{bmatrix} \begin{Bmatrix} M_A \\ N_A \\ M_B \end{Bmatrix} = \begin{Bmatrix} \frac{PR}{2}\left(1+\frac{\pi}{2}\right) \\ \frac{PR}{4}(3+\pi) \end{Bmatrix} \tag{14-41m}$$

Step 6—Couple the Equilibrium Equations and Compatibility Conditions to Obtain the IFM Equations, and Solve for Forces

$$\begin{bmatrix} -1 & -2R & 1 \\ \pi & \pi R & 0 \\ \pi & \frac{3\pi R}{2} & 0 \end{bmatrix} \begin{Bmatrix} M_A \\ N_A \\ M_B \end{Bmatrix} = \frac{PR}{2} \begin{Bmatrix} -1 \\ \left(1+\frac{\pi}{2}\right) \\ \left(\frac{3+\pi}{2}\right) \end{Bmatrix} \tag{14-41n}$$

Solving the IFM equation yields the forces

$$\begin{Bmatrix} M_A \\ N_A \\ M_B \end{Bmatrix} = \begin{Bmatrix} \frac{PR}{4} \\ \frac{P}{2\pi} \\ PR\left(\frac{1}{\pi}-\frac{1}{4}\right) \end{Bmatrix} \tag{14-41o}$$

Other forces can be back-calculated as $N_B = N_A = P/2\pi$ and $V_B = 0$.

Step 7—Back-Calculate the Displacement, if Required, from the Deformation Displacement Relations

We bypassed formulating a shear equilibrium equation at load application point A for the calculation of forces. This EE is reinstated for the displacement calculation because the dual variable of this EE represents the displacement along load P. The transverse EE at A is

$$2V_A = P \quad \text{or} \quad V_A = \frac{P}{2} \tag{14-41p}$$

The DDR for this EE can be written as

$$\beta_v = 2v_A \tag{14-41q}$$

where v_A is the dual variable of the EE representing the transverse displacement at the load application point. The deformation corresponding to the shear force V_A can be calculated as

$$\beta_v = \frac{\partial U}{\partial V_A} = \frac{R}{EI}\int_0^{2\pi} \mathcal{M}\frac{\partial \mathcal{M}}{\partial V_A}\,d\theta \tag{14-41r}$$

Because of symmetry,

$$\beta_v = 2v_A = \frac{2R}{EI}\int_0^{\pi} \mathcal{M}\frac{\partial \mathcal{M}}{\partial V_A}\,d\theta \tag{14-41s}$$

or

$$v_A = \frac{R}{EI}\int_0^{\pi} \mathcal{M}\frac{\partial \mathcal{M}}{\partial V_A}d\theta$$

$$\frac{\partial \mathcal{M}}{\partial V_A} = \frac{2\partial \mathcal{M}}{\partial P} \tag{14-41t}$$

$$\frac{\partial \mathcal{M}}{\partial P} = -\frac{R}{2}\sin\theta\left(\text{In the range } AC,\ 0 \le \theta \le \frac{\pi}{2}\right)$$
$$\frac{\partial \mathcal{M}}{\partial P} = -\frac{R}{2}\left(\text{In the range } CB,\ \frac{\pi}{2} \le \theta \le \pi\right) \tag{14-41u}$$

$$v_A = \frac{R}{EI}\int_0^{\pi} 2\mathcal{M}\frac{\partial \mathcal{M}}{\partial P}d\theta = \frac{R}{EI}\int_0^{\pi/2} 2\mathcal{M}\left(-R\frac{\sin\theta}{2}\right)d\theta + \frac{R}{EI}\int_{\pi/2}^{\pi} 2\mathcal{M}\left(-\frac{R}{2}\right)d\theta$$

By integrating we obtain

$$v_A = \frac{PR^3}{2EI}\left(\frac{\pi}{2} - 1 - \frac{3}{2\pi}\right) \tag{14-41v}$$

From the condition of symmetry, other two displacements at A (see Fig. 14-12b), u_A (displacement along N_A), and φ_A (rotation at A) are zero

or

$$\begin{Bmatrix} v_A \\ u_A \\ \varphi_A \end{Bmatrix} = \frac{PR^3}{2EI}\begin{Bmatrix} \frac{\pi}{2} - 1 - \frac{3}{2\pi} \\ 0 \\ 0 \end{Bmatrix} \tag{14-41w}$$

14.10 Variables and Analysis Methods

Structural mechanics deal with three types of variables: (1) force F, (2) displacement X, and (3) deformation β. These variables are related through four types of relations: (1) equilibrium equations (EE), (2) compatibility conditions (CC), (3) force deformation relations (FDR), and (4) deformation displacement relations (DDR). The choice of primary variables and the requisite relations form the different structural mechanics methods are listed in Table 14-4: (1) the Integrated Force Method, (2) the redundant force method, (3) the displacement method, (4) the hybrid method, and (5) total formulation. A student of strength of materials is not expected to comprehend all information in Table 14-4, which is retained in the original form. This section provides a brief description of the variables and their relationships. The methods of structural mechanics can be developed with the matrices of the equilibrium equations, compatibility conditions, and force deformation relations.

Consider the equilibrium equations, which relate internal force $\{F\}$ to load $\{P\}$ through the equilibrium matrix $[B]$, as

$$[B]\{F\} = \{P\} \tag{14-42a}$$

Force $\{F\}$ is considered to be the primal variable of the EE. In this book, the EE is obtained as the vectoral summation of forces $\{F\}$ and loads $\{P\}$. Alternatively, it can be obtained as the stationary condition of a potential function π^e that can be defined as

$$\pi^e = \{X\}^T[B]\{F\} - \{X\}^T\{P\} \tag{14-42b}$$

The stationary condition of π^e with respect to a certain set of variables yields the EE. The "set of variables" is referred to as the dual variables of the equilibrium equations. Displacements $\{X\}$ are the dual variables of the equilibrium equations, or

$$\delta_{\{X\}}(\pi^e) \Rightarrow [B]\{F\} - \{P\} = 0 \tag{14-42c}$$

Forces $\{F\}$ are the primal variables of the EE, whose dual variables are the displacements $\{X\}$. The concept illustrated for the equilibrium equation can be extended to other relations. For example, deformations $\{\beta\}$ are the primal variables of the compatibility conditions ($[C]\{\beta\}= 0$), and redundants $\{R\}$ are its dual variables. Likewise, displacements $\{X\}$ are the primal variables of the deformation displacement relations ($[B]^T\{X\}=\{\beta\}$), whose dual variables are the forces $\{F\}$. For the force deformation relations ($[G]\{F\}=\{\beta\}$), forces $\{F\}$ represent both the primal and dual variables. If the primal and dual variables are identical, such as for the FDR, then only its coefficient matrix $[G]$ becomes a symmetrical matrix.

The IFM with force $\{F\}$ as the unknown is the force method with the governing equation

$$[S]\{F\} = \{P\} \tag{14-42d}$$

The IFMD with displacement $\{X\}$ as the unknown becomes the displacement method with the governing equation

$$[D]\{X\} = \{P\} \tag{14-42e}$$

The governing equations of the hybrid method with force $\{F\}$ and displacement $\{X\}$ as the unknowns can be written as

$$\begin{bmatrix} S & 0 \\ -JG & I \end{bmatrix} \begin{Bmatrix} F \\ X \end{Bmatrix} = \begin{Bmatrix} P \\ 0 \end{Bmatrix} \tag{14-42f}$$

TABLE 14-4 Methods of Structural Mechanics and Associated Variational Functionals

Method Number	*Method*		*Primary Variables*		*Variational Functional*	*Remarks*
	Elasticity	*Structures*	*Elasticity*	*Structures*		
1	Completed Beltrami-Michell Formulation (CBMF)	Integrated force method (IFM)	Stresses	Forces	IFM variational functional	Equilibrium and compatibility enforced
2	Airy formulation	Redundant force method	Stress function	Redundants	Complementary energy	Field compatibility enforced
3	Navier formulation (NF)	Stiffness method (DM)	Displacements	Deflections	Potential energy	Boundary compatibility noncompliant
4	Hybrid method (HF)	Reissner method (RM)	Stresses and displacements	Forces and deflections	Reissner functional	Boundary compatibility noncompliant
5	Total formulation (TF)	Washizu method (WM)	Stresses, strains, and displacements	Forces, deformations, and deflections	Washizu functional	Boundary compatibility noncompliant

The coefficient matrix of the hybrid method is essentially uncoupled because forces can be determined first; then, the displacements can be recovered by back-substitution as $\{X\} = [J][G]\{F\}$.

The governing equations of the total formulation with force $\{F\}$, displacement $\{X\}$, and deformation $\{\beta\}$ as the unknowns can be written as

$$\begin{bmatrix} S & 0 & 0 \\ -JG & I & 0 \\ -G & 0 & I \end{bmatrix} \begin{Bmatrix} F \\ X \\ \beta \end{Bmatrix} = \begin{Bmatrix} P \\ 0 \\ 0 \end{Bmatrix} \tag{14-42g}$$

The coefficient matrix of the total formulation also can be considered to be an uncoupled matrix. All four methods given by Eq. (14-40) should provide the same solution fidelity if the key EE matrix $[B]$ and the FDR matrix $[G]$ are generated correctly. From known forces $\{F\}$, displacements $\{X\}$ can be back-calculated. Likewise, from displacements, forces can also be recovered by back-substitution. Thus, traditionally, the force method, or the IFM, and the displacement method, or the IFMD, are considered to be the two principal structural mechanics formulations. Table 14-4 summarizes the analysis methods, their primal variables, and their associated variational functionals for structures and elasticity.

Problems

Use the properties of material given in Tables A5-1 and A5-2 to solve of the problems.

14-1 An overhung beam is supported by a tie rod (or a cable) in addition to supports at A and B, as shown in Fig. P14-1. The aluminum beam has a uniform rigidity (E^aI) while the steel cable has an area A and modulus E^s. External load and other dimensions are marked in the figure. Calculate the tension in the cable and reactions at support A and B using the method of redundant forces.

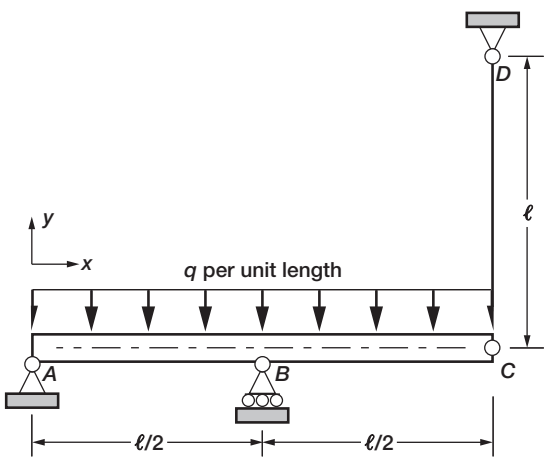

FIGURE P14-1

14-2 The truss shown in Fig. P14-2 is made of steel bars with a 6.5 cm^2 cross-sectional area. The bar *CD* is one cm shorter than its length marked in the figure. Calculate the support reactions using the method of redundant forces.

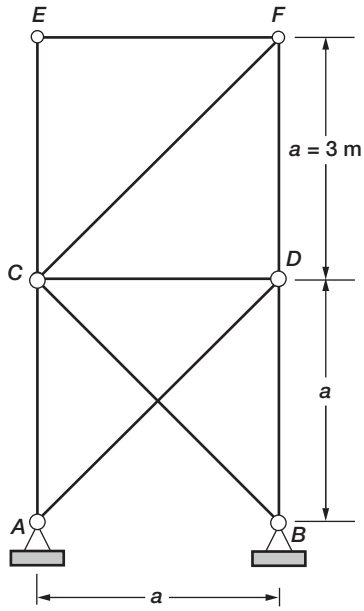

FIGURE P14-2

14-3 A solid circular steel shaft of diameter 15 cm and length 5 m shown in Fig. P14-3 is fixed at both the supports. It is subjected to a linearly distributed torque (T) of intensity of zero at A and T^0 at B. Use the method of redundant force to calculate the reactions at the supports.

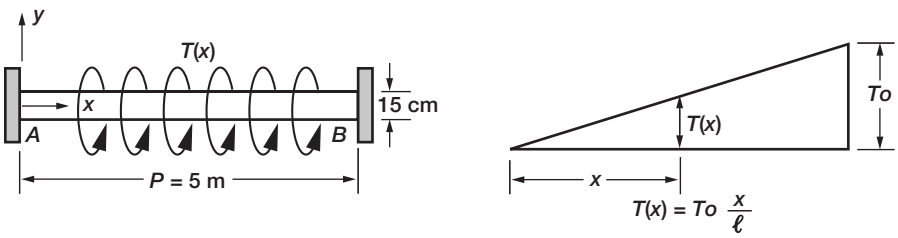

FIGURE P14-3

14-4 A parabolic symmetrical arch is hinged at the crown and at the supports as shown in Fig. P14-4. It is subjected to a uniformly distributed load of intensity q. The equation of the parabola (rise as a function of its length) is

$$h = \frac{4h_o x}{\ell^2}(\ell - x)$$

Calculate the support reactions, moment, and shear force at a location (x).

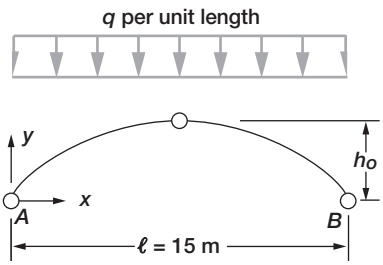

FIGURE P14-4

14-5 The crown hinge of the arch in Problem 14-4 is eliminated to obtain a two-hinged arch without changing any other parameters. Determine the support reactions, moment, and shear force at a location (x).

14-6 A simply supported steel beam with uniform rigidity (EI) is subjected to two concentrated loads at one-third and two-thirds span locations as shown in Fig. P14-6. Calculate the slopes at the supports and the midspan displacement using the conjugate beam concept.

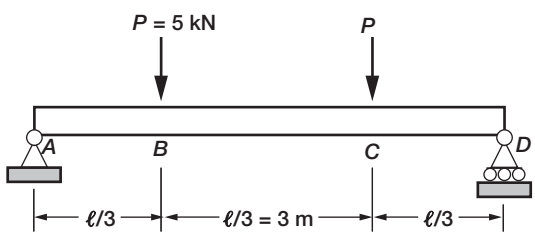

FIGURE P14-6

14-7 The depth and width in the beam of Problem 14-6 are changed as follows.

For sections AB and DC: The cross-section is rectangular with depth $d = 25$ cm and thickness $t = 2$ cm. For section BC the depth $d = 40$ cm and thickness $t = 3$ cm. Other parameters are not changed. Determine the slopes at the supports and the midspan displacement using the conjugate beam concept.

14-8 Calculate the deflection at B and slope at D for the beam with uniform rigidity (EI) shown in Fig. P14-8 using the conjugate beam concept.

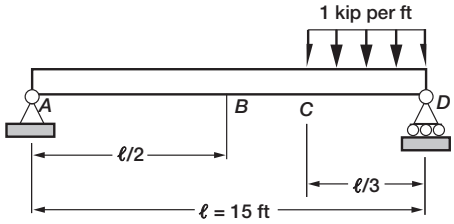

FIGURE P14-8

14-9 Two uniform cantilever beams are attached through a cable as shown in Fig. P14-9. The aluminum beams have a rectangular cross-section with depth ($d = 6$ in.) and thickness ($t = 0.5$ in.). The cable is steel with a cross-sectional area of 0.5 in.^{2}. Other dimensions and load are given in the figure. Use the method of superposition to calculate the displacement at C.

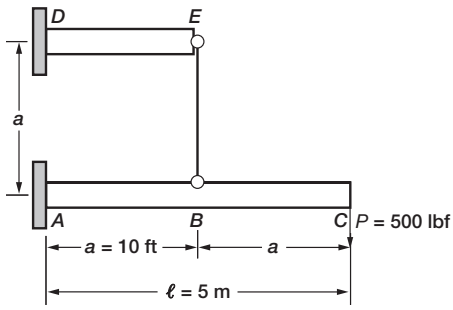

FIGURE P14-9

14-10 Use the principle of superposition to calculate the reactions in the fixed beam subjected to a triangular load as shown in Fig. P14-10. The load peaks at midspan with $q_{max} = 1$ kN per meter. The steel beam has a rectangular cross-section with depth ($d = 25$ cm) and thickness ($t = 1$ cm). Other parameters are marked in the figure.

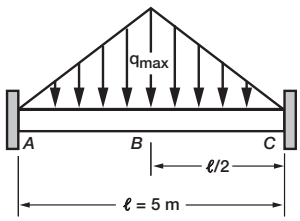

FIGURE P14-10

Appendix 1 Matrix Algebra

Introduction

Strength of materials problems require the solution of a set of simultaneous linear algebraic equations. Manual solution of such equations (when their number exceeds two or three) is cumbersome and may result in numerical mistakes. The equations, however, are amenable to quick computer solution. In a computer, numerical data are stored in arrays, which in essence are matrices. Many computer programs, or codes, are available for solving a large number of equations. Codes are also available to solve solid mechanics problems using matrix methods. The website www.patnaik-ue.org/ifm/, which is dedicated to the solution of strength of material problems, uses matrix notation. Engineering students must use computers, codes, and matrices to solve problems while in school and in their professional careers. This appendix introduces the notation and operations of matrices, or matrix algebra.

Consider, as an example, the calculation of the bar forces (F_1, F_2, F_3) in a three-bar truss. This requires the simultaneous solution of three equations given in the left side of Table A1-1. The solution yields the values of the three unknown bar forces. Writing equations in the traditional long-hand notation can become more cumbersome as the number of simultaneous equations increases. Engineers follow an abridged notation, referred to as matrix notation, to write these equations. The equations are given in matrix notation in the right side of Table A1-1. The two equation sets are equivalent and provide the same solution.

A shorthand notation ($[A]\{F\} = \{P\}$) is followed to write the three equations in matrix notation. The definition of the terms in this equation follows.

Matrix $[A]$:

$$[A] = \begin{bmatrix} 0.707 & 0.0 & -0.707 \\ -0.707 & -1.0 & -0.707 \\ 1.0 & -1.0 & 0.5 \end{bmatrix} = \begin{bmatrix} a_{11} & a_{12} & a_{13} \\ a_{21} & a_{22} & a_{23} \\ a_{31} & a_{32} & a_{33} \end{bmatrix} = \left[a_{ij}\right] \qquad \text{(A1-1}a\text{)}$$

TABLE A1-1 Matrix Notation for Simultaneous Equations

Simultaneous Equations	*In Matrix Notation*
$\begin{bmatrix} 0.707F_1 & +0F_2 & -0.707F_3 = 50 \\ -0.707F_1 & -1.0F_2 & -0.707F_3 = 100 \\ 1.0F_1 & -1.0F_2 & 0.5F_3 = 0 \end{bmatrix}$	$\begin{bmatrix} 0.707 & 0.0 & -0.707 \\ -0.707 & -1.0 & -0.707 \\ 1.0 & -1.0 & 0.5 \end{bmatrix} \begin{Bmatrix} F_1 \\ F_2 \\ F_3 \end{Bmatrix} = \begin{Bmatrix} 50 \\ 100 \\ 0 \end{Bmatrix}$

The matrix is an array of numbers (or symbols) arranged in a row-column format. Matrix $[A]$ has three rows ($m = 3$) and three columns ($n = 3$), or $[A]$ is a three-by-three matrix, $A(3 \times 3)$.

Vector $\{F\}$:

$$\{F\} = \begin{Bmatrix} F_1 \\ F_2 \\ F_3 \end{Bmatrix} = \{F_{i1}\} = \{F_i\} \tag{A1-1b}$$

The vector $\{F\}$ is a single array of numbers (or symbols) arranged in a column format. It is a vector to be determined, or an unknown vector. Solution of the matrix equation ($[A]\{F\} = \{P\}$) yields the vector $\{F\}$. This vector $\{F\}$ has three rows ($m = 3$) and one column ($n = 1$). In matrix notation, it can be written as F_{i1}. It is customary to drop the unity column index ($j = 1$) and write it as F_i.

Vector $\{P\}$:

$$\{P\} = \begin{Bmatrix} 50 \\ 100 \\ 0 \end{Bmatrix} = \{P_{i1}\} = \{P_i\} \tag{A1-1c}$$

The vector $\{P\}$ is specified or it is a known vector. Like vector $\{F\}$, it has also three rows ($m = 3$).

The solution of the simultaneous equation, or the matrix equation ($[A]\{F\} = \{P\}$) yields the forces as

$$\begin{aligned} F_1 &= -5.025 \\ F_2 &= -42.893 \\ F_3 &= -75.736 \end{aligned}$$

or

$$\{F\} = \begin{Bmatrix} F_1 \\ F_2 \\ F_3 \end{Bmatrix} = \begin{Bmatrix} -5.025 \\ -42.893 \\ -75.736 \end{Bmatrix} = -\begin{Bmatrix} 5.025 \\ 42.893 \\ 75.736 \end{Bmatrix} \tag{A1-1d}$$

Matrix notation, in essence, is a convenient way to represent a set of simultaneous equations.

Types of Matrices

General Matrix

Matrix $[A]$ is a rectangular array of numbers (or symbols), arranged in a row-column format. Because it has m rows and n columns, it is called an $(m \times n)$ matrix, and it should be enclosed in brackets as

$$[A] = \begin{bmatrix} a_{11} & a_{12}, \ldots, a_{1n} \\ a_{21} & a_{22}, \ldots, a_{2n} \\ \cdot & \\ \cdot & \\ \cdot & \\ a_{m1} & a_{m2}, \ldots, a_{mn} \end{bmatrix} = (a_{ij}) \tag{A1-2}$$

The number of rows, designated by the letter m, represents the number of simultaneous equations in $[A]\{X\} = \{b\}$. The number of columns, designated by the letter n, represents the number of unknowns in $[A]\{X\} = \{b\}$. A matrix coefficient, or element (a_{ij}) has two indices ($i = 1, 2, \ldots, m$ and $j = 1, 2, \ldots, n$). The first index (i) represents the row number which is equal to the number of equations. The second index (j) represents the column number, which is equal to the number of unknowns. For example, the element a_{23} in Table A1-1, occupies row $i = 2$ and column $j = 3$, or $a_{23} = -0.707$.

Square Matrix

If the number of rows (m) is equal to the number of columns (n), the matrix is a square matrix $(m = n)$. The matrix $[A]$ in Eq. (A1-1a) is a (3×3) square matrix.

Symmetrical Matrix

A square matrix is a symmetrical matrix provided its elements are symmetrical about the principal (or leading) diagonal, which is the line joining the first element (a_{11}) and the last element (a_{mm}). Its elements obey the rule $a_{ij} = a_{ji}$. A flexibility matrix $[G]$ of a strength of materials problem is a symmetrical matrix. The (2×2) symmetrical flexibility matrix of a beam is

$$[G] = \begin{bmatrix} \frac{\ell}{EI} & \frac{\ell^2}{2EI} \\ & \backslash \\ \frac{\ell^2}{2EI} & \frac{\ell^3}{3EI} \end{bmatrix}$$

$$g_{12} = g_{21} = \frac{\ell^2}{2\text{EI}} \tag{A1-3a}$$

Skew-Symmetrical Matrix

This is a square matrix with zero diagonal elements ($a_{ii} = 0$) and nondiagonal elements are negative transpositions of one another: ($a_{ij} = -a_{ji}$). The following (3×3) matrix [A] is skew-symmetrical matrix.

$$[A] = \begin{bmatrix} 0 & -3 & -5 \\ 3 & 0 & -2 \\ 5 & 2 & 0 \end{bmatrix} \tag{A1-3b}$$

Skew Matrix

This is a square matrix with nonzero diagonal elements and ($a_{ij} = -a_{ji}$). The following (3×3) matrix [A] is skew-symmetrical.

$$[A] = \begin{bmatrix} 5 & -3 & -5 \\ 3 & 6 & -2 \\ 5 & 2 & 8 \end{bmatrix} \tag{A1-3c}$$

Diagonal Matrix

This is a square matrix that has nonzero diagonal elements but all other elements are zero ($a_{ij} = 0$, if $i \neq j$). The following (3×3) matrix [A] is a diagonal matrix. It can be written as a row with special brackets.

$$[A] = \begin{bmatrix} 5 & 0 & 0 \\ 0 & 6 & 0 \\ 0 & 0 & 8 \end{bmatrix}$$

$$[A] = \lceil 5 \quad 6 \quad 8 \rfloor \tag{A1-3d}$$

Identity Matrix

This is a square matrix with unity for diagonal elements and zero for all other elements ($a_{ij} = 0$, if $i \neq j$, $a_{ii} = 1$). It is denoted by the symbol $[I]$. The following (3×3) matrix $[I]$ is an identity matrix, which is alternately called a unity matrix.

$$[I] = \begin{bmatrix} 1 & 0 & 0 \\ 0 & 1 & 0 \\ 0 & 0 & 1 \end{bmatrix}$$

$$[I] = \begin{bmatrix} 1 & 1 & 1 \end{bmatrix} \tag{A1-3e}$$

Null Matrix

This is a matrix of dimension $(m \times n)$ with zeros for the elements ($a_{ij} = 0$ for all i and j). It is denoted by the symbol $[O]$. A (3×3) null matrix $[O]$ follows.

$$[O] = \begin{bmatrix} 0 & 0 & 0 \\ 0 & 0 & 0 \\ 0 & 0 & 0 \end{bmatrix} \tag{A1-3f}$$

Triangular Matrix

Typically, this is a square matrix with zero elements on one side of the diagonal, and it is called a triangular matrix. It is called an upper triangular matrix $[U]$ when the nonzero elements occupy the upper diagonal and above it (see Eq. A1-3g). It is called a lower triangular matrix $[L]$ when the nonzero elements occupy the lower diagonal and below it. A (3×3) upper triangular matrix $[U]$, and a (3×3) lower triangular matrix $[L]$ follow.

$$[L] = \begin{bmatrix} 1 & 0 & 0 \\ 2 & 4 & 0 \\ 6 & 7 & 9 \end{bmatrix}; \quad [U] = \begin{bmatrix} 1 & 2 & 6 \\ 0 & 3 & 1 \\ 0 & 0 & 5 \end{bmatrix} \tag{A1-3g}$$

Matrix Operation

Matrix operation includes equality, addition, subtraction, multiplication, and division or its inverse.

Equality

Two matrices ($[A]$ and $[B]$) of the same dimension $(m \times n)$ are equal provided their elements are identical:

$$[A] = [B]$$

then

$$a_{ij} = b_{ij} \quad (1 \leq i \leq m \quad \text{and} \quad 1 \leq j \leq n) \tag{A1-4a}$$

Addition

Two matrices ([A] and [B]) of the same dimension ($m \times n$) can be added to obtain a third matrix [C] of the same dimension or order by adding their individual elements.

$$[A] + [B] = [C]$$

then

$$a_{ij} + b_{ij} = c_{ij} \quad (1 \leq i \leq m \quad \text{and} \quad 1 \leq j \leq n) \tag{A1-4b}$$

Subtraction

Two matrices ([A] and [B]) of the same dimension ($m \times n$) can be subtracted to obtain a third matrix [C] of the same order by subtracting their individual elements.

$$[A] - [B] = [C]$$

then

$$a_{ij} - b_{ij} = c_{ij} \quad (1 \leq i \leq m \quad \text{and} \quad 1 \leq j \leq n) \tag{A1-4c}$$

The commutative and associative laws of algebra apply to matrices.

Commutative law: $[A] + [B] = [B] + [A]$
Associative law: $([A] + [B]) + [C] = [A] + ([B] + [C])$
Null matrix [0]: $[A] - [B] = [0]$, if $[A] = [B]$

Matrix Transpose

The transpose of matrix [A] is designated as $[A]^T$. The transpose matrix is formed by interchanging all rows for the corresponding columns. Elements of the matrices are related as $a_{ij}^T = a_{ji}$.

$$\underset{(3\times 2)}{[A]} = \begin{bmatrix} a_{11} & a_{12} \\ a_{21} & a_{22} \\ a_{31} & a_{23} \end{bmatrix}; \quad \underset{(2\times 3)}{[A]^T} = \begin{bmatrix} a_{11} & a_{21} & a_{31} \\ a_{12} & a_{22} & a_{23} \end{bmatrix} \tag{A1-5}$$

The order of the transpose matrix $[A]^T$ is ($n \times m$) when the dimension of the original matrix ([A]) is ($m \times n$). Transposing twice reverts to the original matrix ($[[A]^T]^T = [A]$).

For a symmetrical matrix ([A]), the transpose is equal to the original matrix ($[A]^T = [A]$). For a skew-symmetrical matrix ([A]), the transpose is equal to the negative of the original matrix, ($[A]^T = -[A]$).

Matrix Multiplication

Two matrices ([A]) of dimension ($m \times p$) and [B] of order ($p \times n$) can be multiplied to obtain a third matrix [C] of dimension ($m \times n$). Matrix multiplication is valid provided the number of columns (p) in matrix [A] equal the number of rows (p) in matrix [B]. Matrices that satisfy this condition are called conformable in the order ([A][B]).

$$\underset{(m\times p)}{[A]}\ \underset{(p\times n)}{[B]} = \underset{(m\times n)}{[C]}$$

$$c_{ij} = \sum_{k=1}^{p} a_{ik}\ b_{kj} \quad (1 \le i \le m \quad \text{and} \quad 1 \le j \le n) \tag{A1-6a}$$

The element c_{ij} of the product matrix [C] is obtained as the scalar product of the ith row of matrix [A] and the jth column of matrix [B].

$$\underset{(3\times 2)}{[A]} = \begin{bmatrix} a_{11} & a_{12} \\ a_{21} & a_{22} \\ a_{31} & a_{32} \end{bmatrix}; \quad \underset{(2\times 2)}{[B]} = \begin{bmatrix} b_{11} & b_{12} \\ b_{21} & b_{22} \end{bmatrix}$$

$$\underset{(3,2)}{[C]} = [A][B] = \begin{bmatrix} a_{11}\ b_{11} + a_{12}\ b_{21}) & (a_{11}\ b_{12} + a_{12}\ b_{22}) \\ (a_{21}\ b_{11} + a_{22}\ b_{21}) & (a_{21}\ b_{12} + a_{22}\ b_{22}) \\ (a_{31}\ b_{11} + a_{32}\ b_{21}) & (a_{31}\ b_{12} + a_{32}\ b_{22}) \end{bmatrix} \tag{A1-6b}$$

Multiplication of a matrix ([A]) by a scalar (c) consists of multiplying each element of [A] by (c).

$$c[A] = [B]$$

$$b_{ij} = ca_{ij} \quad (\text{for all } i \text{ and } j) \tag{A1-6c}$$

Multiplication of a conforming square matrix ([A]) by an identity matrix [I] and vice versa produces no change in the matrix [A].

$$[I][A] = [A][I] = [A] \tag{A1-6d}$$

The order of multiplication between two matrices ([A] and [B]) cannot be reversed.

$$[A][B] \neq [B][A] \tag{A1-6e}$$

The associative and distributive laws apply to matrix multiplication.

$$[A][B][C] = ([A][B])[C] \tag{A1-6f}$$

$$[A]([B] + [C]) = [A][B] + [A][C] \tag{A1-6g}$$

Consider two square $m = n$ matrices ($[A]$ and $[B]$). If their product is an identity matrix ($[A][B] = [I]$) then matrix $[B]$ is called the inverse of $[A]$ and it is denoted as $[A]^{-1}$.

$$[A][B] = [I]$$
$$[A]^{-1} = [B]$$
$$[A][A]^{-1} = [A]^{-1}[A] = [I] \tag{A1-6h}$$

Matrix Factorization

A given matrix $[A]$ can be factorized as the product of two matrices ($[B][C]$).

$$[A] = [B][C] \tag{A1-6i}$$

Factorization need not be a unique process because an infinite number of matrices $[B]$ and $[C]$ can be generated with the same product matrix $[A]$.

A special factorization referred to as LU (lower and upper triangular) decomposition is unique. The matrices $[L]$ and $[U]$ are the lower and upper triangular matrices, respectively.

$$[A] = [L][U] \tag{A1-6j}$$

Solution of the Matrix Equation

A system of linear algebraic equations can be written as $[A]\{X\} = \{b\}$. The coefficient matrix $[A]$ of dimension $(n \times n)$ is given. The right side $\{b\}$ is an n-component vector, which is also known. The solution requires the calculation of the n-component unknown vector $\{X\}$. Direct solution to the equation ($[A]\{X\} = \{b\}$) can be obtained as

$$\{X\} = [A]^{-1}\{b\} \tag{A1-7}$$

The solution $\{X\}$ is obtained by first calculating the inverse $[A]^{-1}$ and then multiplying it with the given vector $\{b\}$. The inverse calculation can be performed using several available methods like the Gauss elimination method, the Gauss-Jordan method, and the LU-factorization method. The direct method is not recommended because the solution can be obtained without a formal inversion of the coefficient matrix. We will discuss one such method referred to as the "Choleski method."

Choleski Method

This method has two steps: factorization and back substitution.

Factorization

The matrix $[A]$ is factored into $[L][U]$. The factors are calculated simultaneously using simple algorithms. Observe the unity in the diagonal of the upper triangular matrix $[U]$.

$$
\begin{aligned}
[A] &= [L][U] \\
&= \begin{bmatrix} \ell_{11} & & & \\ \ell_{21} & \ell_{22} & [0] & \\ \ell_{31} & \ell_{32} & \ell_{33} & \\ \dots & & & \\ \dots & & & \\ \ell_{n1} & \ell_{n2} & \dots & \ell_{nn} \end{bmatrix} \begin{bmatrix} 1 & u_{12} & \dots & u_{1n} \\ & 1 & u_{23} \dots & u_{2n} \\ & & 1 \dots & u_{3n} \\ & & \dots & \\ & [0] & & \\ & & & 1 \end{bmatrix}
\end{aligned} \tag{A1-8a}
$$

where,

$$
\begin{aligned}
\ell_{ij} &= a_{ij} - \sum_{p=1}^{j-1} \ell_{ip} u_{pj} \quad (i \geq j) \\
u_{ii} &= 1 \\
u_{ij} &= \left(a_{ij} - \sum_{p=1}^{i-1} \ell_{ip} u_{pj} \right) \Big/ \ell_{ii} \quad (i < j)
\end{aligned} \tag{A1-8b}
$$

The method is illustrated considering the matrix equation given in Table A1-1. The matrix $[A]$ and its factors are calculated as

$$
[A] = \begin{bmatrix} 0.707 & 0.0 & -0.707 \\ -0.707 & -1.0 & -0.707 \\ 1.0 & -1.0 & 0.5 \end{bmatrix} = \begin{bmatrix} \ell_{11} & & \\ & & [0] \\ \ell_{21} & \ell_{22} & \\ \ell_{31} & \ell_{32} & \ell_{33} \end{bmatrix} \begin{bmatrix} 1 & u_{12} & u_{13} \\ 0 & 1 & u_{23} \\ 0 & 0 & 1 \end{bmatrix}
$$

$$
\begin{aligned}
\ell_{11} &= a_{11} = 0.707 \\
u_{11} &= 1.0 \\
u_{22} &= 1.0 \\
u_{33} &= 1.0 \\
u_{12} &= \frac{a_{12}}{\ell_{11}} = 0 \\
u_{13} &= \frac{a_{13}}{\ell_{11}} = -1.0 \\
\ell_{21} &= a_{21} = -0.707 \\
\ell_{22} &= a_{22} - \ell_{21} u_{12} = -1.0 + 0.707 \times 0 = -1.0 \\
\ell_{31} &= a_{31} = 1.0 \\
\ell_{32} &= a_{32} - \ell_{31} u_{12} = -1 - 1 \times 0 = -1 \\
u_{23} &= \frac{a_{23} - \ell_{21} u_{13}}{\ell_{22}} = \frac{-0.707 + 0.707 \times -1}{-1} = 1.41 \\
\ell_{33} &= a_{33} - \ell_{31} u_{13} - \ell_{32} u_{23} = 0.5 + 1 + 1 \times (-1.707) = 2.91 \\
[L] &= \begin{bmatrix} 0.707 & 0 & 0 \\ -0.707 & -1.0 & 0 \\ 1.0 & -1.0 & 2.91 \end{bmatrix} \text{and } [U] = \begin{bmatrix} 1.0 & 0 & -1.0 \\ 0 & 1.0 & 1.41 \\ 0 & 0 & 1.0 \end{bmatrix}
\end{aligned} \tag{A1-9a}
$$

The accuracy of the factors is ascertained by multiplying the factors to recover the matrix as $[L][U] = [A]$.

$$[L][U] = \begin{bmatrix} 0.707 & 0.0 & -0.707 \\ -0.707 & -1.0 & -0.707 \\ 1.0 & -1.0 & 0.5 \end{bmatrix} = [A] \tag{A1-9b}$$

Back-Substitution

This is performed in two steps. First an intermediate vector $\{b^*\}$ is obtained, then it is used to calculate the solution $\{X\}$.

$$\begin{aligned}
[L][U]\{X\} &= \{b\} \\
[U]\{X\} &= [L]^{-1}\{b\} \\
[L]\{b^*\} &= \{b\} \\
\{b^*\} &= [L]^{-1}\{b\} \\
b_1^* &= \frac{b_1}{\ell_{11}} \\
b_i^* &= \left(bi - \sum_{p=1}^{i-1} \ell_{ip} b_p^*\right) \Big/ \ell_{ii} \quad (i = 2, 3, \ldots, n) \qquad \text{(A1-10}a\text{)} \\
[U]\{X\} &= \{b^*\} \\
X_n &= b_n^* \\
X_i &= b_i^* - \sum_{p=i+1}^{n} u_{i,p} X_p \quad (i = n-1, n-2, \ldots, 1)
\end{aligned}$$

The back-substitution for the numerical example yields

$$\begin{aligned}
b_1^* &= b_1/\ell_{11} = 50/0.707 = 70.71 \\
b_2^* &= \left(b_2 - \ell_{21} b_1^*\right)/\ell_{22} = -150 \\
b_3^* &= \left(b_3 - \ell_{31} b_1^* - \ell_{31} b_2^*\right)/\ell_{33} = -75.74 \\
X_3 &= b_3^* = -75.74 \qquad \text{(A1-10}b\text{)} \\
X_2 &= b_2^* - U_{23} X_3 = -42.89 \\
X_1 &= b_1^* - U_{12} X_{12} - U_{13} X_3 = -5.03
\end{aligned}$$

$$\begin{Bmatrix} X_1 \\ X_2 \\ X_3 \end{Bmatrix} = \begin{Bmatrix} 5.03 \\ 42.89 \\ -150.0 \end{Bmatrix}$$

The manual solution of three simultaneous equations requires quite a few computations and calculations and can become cumbersome when there are more than three equations. However, with computers, such solutions are easily obtained for thousands of equations.

Determinants

Only a square matrix ([A]) has a determinant, which is a scalar number. The determinant is denoted by det[A] or $|A|$. It is calculated using the Laplace formula, which is based on two quantities called the minor and the cofactor. Each matrix element (a_{ij}) has a minor (M_{ij}) and a cofactor (α_{ij}). Consider a square matrix of order n. The minor (M_{ij}) for an element (a_{ij}) is the determinant of a square matrix of order $(n-1)$, and this smaller matrix is obtained by deleting the ith row and jth column of the original matrix. The cofactor is obtained as $\alpha_{ij} = (-1)^{i+j}\ (M_{ij})$. The value of the determinant (det[A]) is equal to the sum of the products of all the n-elements of any row (or column) of the matrix [A], each multiplied by its own cofactor.

$$\det[A] = \sum_{j=1}^{n} a_{ij}\alpha_{ij} \qquad \text{(Row expansion, or } i \text{ is specified)}$$

$$\det[A] = \sum_{i=1}^{n} a_{ij}\alpha_{ij} \qquad \text{(Column expansion, or } j \text{ is specified)} \tag{A1-11}$$

The determinate of a 2×2 matrix can be calculated as

$$\det[A] = \begin{vmatrix} a_{11} & a_{12} \\ a_{21} & a_{22} \end{vmatrix} = a_{11}a_{22} - a_{21}a_{12} \tag{A1-12a}$$

A 3×3 matrix has the following determinant

$$\begin{aligned} \det[A] &= \begin{vmatrix} a_{11} & a_{12} & a_{13} \\ a_{21} & a_{22} & a_{23} \\ a_{31} & a_{32} & a_{33} \end{vmatrix} \\ &= a_{11}(a_{22}a_{33} - a_{32}a_{23}) - a_{21}(a_{12}a_{33} - a_{32}a_{13}) + a_{31}(a_{12}a_{23} - a_{22}a_{13}) \end{aligned} \tag{A1-12b}$$

If the determinant $\det[A] = 0$, the matrix is singular. The equation system ($[A]\{X\} = \{P\}$) becomes inconsistent and cannot be solved for $\{X\}$. The determinant is not zero for the governing matrix of the Integrated Force Method, the dual IFM, and the stiffness method.

Eigenvalue Problem

A matrix equation of the type ($[A]\{X\} = \lambda[I]\{X\}$), or ($[[A] - \lambda[I]]\{X\} = \{0\}$) is called an eigenvalue problem. Here, [A] is a square matrix of order ($n \times n$) and $\{X\}$ is an n-component

vector. Its solution requires the calculation of the eigenvalue (λ) and the eigenvector $\{X\}$. In strength of materials, the buckling analysis of a column requires the solution to an eigenvalue problem. It also finds frequent application in the dynamic and stability analysis of structural system.

The matrix equation $[[A] - \lambda[I]]\{X\} = \{0\}$ is satisfied for a null vector ($\{X\} = \{0\}$). Such a solution is called a trivial solution, and it has little importance. A nontrivial solution can exist provided the determinant $\det([A] - \lambda[I])$ is zero. Eigenvalue analysis requires the expansion of the determinant as a polynomial in the eigenvector (λ). Its solution yields the eigenvalues, and the eigenvectors are back-calculated. Solving an eigenvalue problem is more difficult than solving linear equations. The concept is illustrated considering a (2×2) matrix $[A]$.

EXAMPLE A1-1

Calculate the eigenvalues and eigenvectors for the system

$$\left[\begin{bmatrix} 1 & 2 \\ 3 & 2 \end{bmatrix} - \lambda \begin{bmatrix} 1 & 0 \\ 0 & 1 \end{bmatrix}\right] \begin{Bmatrix} X_1 \\ X_2 \end{Bmatrix} = \begin{Bmatrix} 0 \\ 0 \end{Bmatrix} \tag{A1-13a}$$

The determinant of the eigenvalue problem is

$$\begin{vmatrix} 1 - \lambda & 2 \\ 3 & 2 - \lambda \end{vmatrix} = 0 \tag{A1-13b}$$

Expansion of the determinant yields a quadratic equation. This equation is called the characteristic equation of an eigenvalue problem. For an $(n \times n)$ matrix, the characteristic polynomial is an nth-order equation in λ. The polynomial in the equation is a quadratic equation because $[A]$ is a (2×2) matrix.

$$\begin{aligned} &(1 - \lambda)(2 - \lambda) - 6 = 0 \\ &\lambda^2 - 3\lambda - 4 = 0 \end{aligned} \tag{A1-13c}$$

The solution of the quadratic equation yields two eigenvalues.

$$\lambda_1 = 4 \quad \text{and} \quad \lambda_2 = -1 \tag{A1-13d}$$

The eigenvector is calculated using the original equation.

$$\begin{bmatrix} 1 & 2 \\ 3 & 2 \end{bmatrix} \begin{Bmatrix} X_1 \\ X_2 \end{Bmatrix} = \lambda \begin{Bmatrix} X_1 \\ X_2 \end{Bmatrix} \tag{A1-13e}$$

The eigenvector cannot be uniquely defined. One component of the eigenvector must be specified with an arbitrary value. For the first eigenvalue (λ_1), let us assume $X_1 = 1$. The second component (X_2) is obtained as solution to Eq. (A1-13*e*).

$$\begin{aligned} \text{Eigen vector for } \lambda_1 &= 4 \\ \text{Set } X_1 &= 1.0 \\ X_2 &= 1.5 \end{aligned} \tag{A1-13f}$$

Likewise, for the second eigenvalue (λ_2), assume that $X_2 = 1$. The first component (X_1) is obtained as the solution to Eq. (A1-13*e*).

$$\begin{aligned} \text{Eigen vector for } \lambda_2 &= -1 \\ \text{Set } X_2 &= 1.0 \\ X_1 &= -1.0 \end{aligned} \tag{A1-13g}$$

Eigenvalue analysis is a major topic of matrix analysis. A numerical analysis book should be consulted for more information on the subject.

Appendix 2 Properties of a Plane Area

Introduction

Analysis of strength of materials problems requires the geometrical properties of plane sections in the x, y coordinate plane.

1. Area (A) in truss analysis.
2. The location of the neutral axis (n–a) and moment of inertia (I) in beam analysis.
3. The polar moment of inertia (J) in shaft analysis.

This appendix describes the calculation of the geometrical properties of a plane area.

Area

It is a square measure of an enclosed space in the two dimensions. It is a positive scalar and its dimension is (L^2). It can be measured in square inch in the USCS system; in the SI system, square meter may be the preferred unit: ($1\,\text{in.}^2 = 6.4516 \times 10^{-4}\,\text{m}^2 = 6.4516\,\text{cm}^2$ and $1\,\text{m}^2 = 1550\,\text{in.}^2$). For a surface ($S$), shown in Fig. A2-1, the area is defined by the following integral.

$$A = \int_S dxdy = \int_S dA \tag{A2-1}$$

Most area in strength of material application can be calculated without using the integral form. Formulas to calculate areas for typical shapes are listed in the first column in Table A2-1.

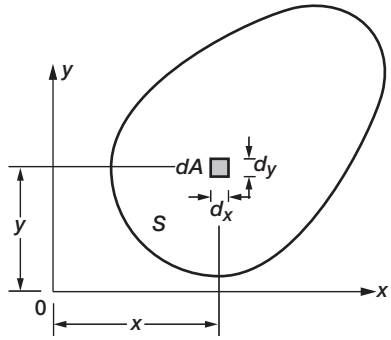

FIGURE A2-1 *Area in x–y plane.*

Centroid

It is the geometrical center of the area. The coordinates ($\bar{x}$, $\bar{y}$) of the centroid (G) of an arbitrary area is defined as the ratio of the first moment of area about x-axis (or y-axis) to the area as

$$\bar{x} = \frac{1}{A}\int_S x dA \tag{A2-2a}$$

$$\bar{y} = \frac{1}{A}\int_S y dA \tag{A2-2b}$$

Centroid of areas required in strength of materials problems can be calculated without using the integral form. Coordinates of centroid for typical cross-sectional shapes are listed in the second column in Table A2-1.

Centroid of Composite Area

The centroid of a composite area can be obtained in two steps. First the area is divided into several elementary components like rectangles and triangles whose centroids are known (see Table A2-1). Centroid is calculated next using lumped equivalents of Eqs. (A2-2a) and (A2-2b).

$$\bar{x} = \frac{1}{A}\sum_{i=1}^{n} \bar{x}_i A_i \tag{A2-3a}$$

$$\bar{y} = \frac{1}{A}\sum_{i=1}^{n} \bar{y}_i A_i \tag{A2-3b}$$

Here, n = number of components. ($\bar{x}_i$, $\bar{y}_i$) are the coordinates of the centroid for the ith area component (A_i).

TABLE A2-1 Properties of Plane Sections

Shape	*Area, A (L^2)*	*Centroid G(L)*		*Moment of Inertia (L^4)*			*Polar Moment of Inertia, J, (L^4)*
		$\bar{x}$	$\bar{y}$	$I_{\bar{x}}$	$I_{\bar{y}}$	$I_{\bar{x}\bar{y}}$	
Rectangle							
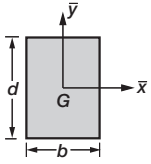	bd	0	0	$\frac{bd^3}{12}$	$\frac{db^3}{12}$	0	$\frac{bd}{12}(b^2+d^2)$
Trapezoid							
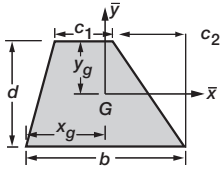	$\frac{d}{2}(b+c_1)$	$\frac{1}{3(b+c_1)}\times$ $[2b^2+2bc_1-c_2b$ $-2c_1c_2-c_1^2]$	$\frac{d}{3}\left(\frac{2b+c_1}{b+c_1}\right)$	$\frac{d^3}{36}\left(\frac{b^2+4bc_1+c_1^2}{b+c_1}\right)$	$\frac{d}{36(b+c_1)}$ $[b^4+c_1^4+2bc_1$ $(b^2+c_1^2)$ $-c_1(b^3+3bc_1^2-c_1^3)$ $+c_1^2(b^2+4bc_1+c_1^2)]$	$\frac{d^2}{72(b+c_1)}$ $[c_1(3b^2-3bc_1-c_1^2)$ $+b^3-c_2$ $(2b^2+8bc_1+2c_1^2)]$	$I_{\bar{x}}+I_{\bar{y}}$
Triangle							
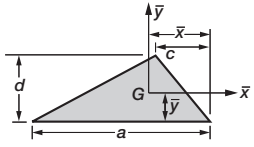	$\frac{ad}{2}$	$\frac{a+c}{3}$	$\frac{d}{3}$	$\frac{ad^3}{36}$	$\frac{ad}{36}(a^2-ac+c^2)$	$\frac{ad^2}{72}(a-2c)$	$\frac{ad}{36}(d^2+a^2-ac+c^2)$

TABLE A2-1 continued

Shape	Area, A (L^2)	Centroid G(L)		Moment of Inertia (L^4)			Polar Moment of Inertia, J, (L^4)
		$\bar{x}$	$\bar{y}$	$I_{\bar{x}}$	$I_{\bar{y}}$	$I_{\bar{x}\bar{y}}$	
Isosceles triangle 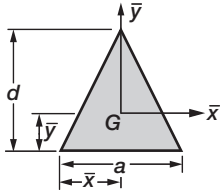	$\frac{ad}{2}$	$\frac{a}{2}$	$\frac{d}{3}$	$\frac{ad^3}{36}$	$\frac{a^3d}{48}$	0	$\frac{ad}{144}(4d^2+3a^2)$
Right triangle 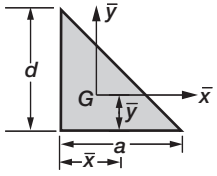	$\frac{ad}{2}$	$\frac{a}{3}$	$\frac{d}{3}$	$\frac{ad^3}{36}$	$\frac{a^3d}{36}$	$-\frac{a^2d^2}{72}$	$\frac{ad}{36}(a^2+d^2)$
Circle 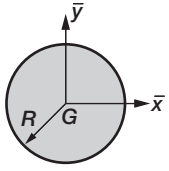	πR^2	0	0	$\frac{\pi R^4}{4}$	$\frac{\pi R^4}{4}$	0	$\frac{\pi R^4}{2}$

Ring

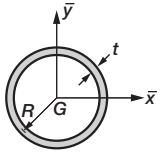

$t \ll R$

$2\pi Rt$	0	0	$\pi R^3 t$	$\pi R^3 t$	0	$2\pi R^3 t$

Ellipse

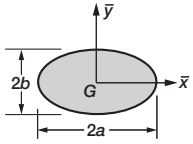

πab	0	0	$\frac{\pi ab^3}{4}$	$\frac{\pi ba^3}{4}$	0	$\frac{\pi ab}{4}(a^2+b^2)$

Sector of circle

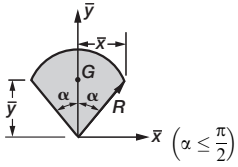

$\left(\alpha \le \frac{\pi}{2}\right)$

αR^2	$r\sin\alpha$	$\frac{2r\sin\alpha}{3\alpha}$	$\frac{R^4}{4}(\alpha+\sin\alpha\cos\alpha)$	$\frac{R^4}{4}(\alpha-\sin\alpha\cos\alpha)$	0	$\frac{\alpha R^4}{2}$

Segment of circle

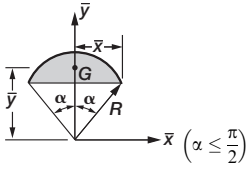

$\left(\alpha \le \frac{\pi}{2}\right)$

$R^2(\alpha-\sin\alpha\cos\alpha)$	0	$\frac{2R}{3}\times\left(\frac{\sin^3\alpha}{\alpha-\sin\alpha\cos\alpha}\right)$	$\frac{R^4}{4}(\alpha-\sin\alpha\cos\alpha+2\sin^3\alpha\cos\alpha)$	$\frac{R^4}{12}(3\alpha-3\sin\alpha\cos\alpha-2\sin^3\alpha\cos\alpha)$	0	$I_{\bar{x}}+I_{\bar{y}}$

EXAMPLE A2-1

Calculate the area and the centroid of the T-section, shown in Fig. A2-2. It is made of a flange with dimensions (b and t_f) and a web with size (d and t_w).

The T-section is decomposed into a rectangular flange area with centroid at G_f and a web area with centroid G_w. The areas, and the coordinates of the centroids, as shown in Fig. A2-2b, are obtained by observation. The component properties of the T-section are:

Flange:

Area $A_f = bt_f$

Centroid $G_f = (0, 0)$

Web:

Area $A_w = dt_w$

Centroid $G_w = \left(o, \dfrac{d + t_f}{2}\right)$

$$\text{Area of } T\text{-section: } A = A_f + A_w = bt_f + dt_w \tag{A2-4}$$

The $\bar{x}$ coordinate of the centroid of the T-section is obtained as the ratio of the moment of area of the components about the y-axis to the area of the T-section.

$$\bar{x} = \frac{1}{A}\left(A_f \times 0 + A_w \times 0\right) = 0 \tag{A2-5a}$$

Likewise the $\bar{y}$ coordinate of the centroid is obtained as the ratio of the moment of area of the components about the y-axis to the area of the T-section.

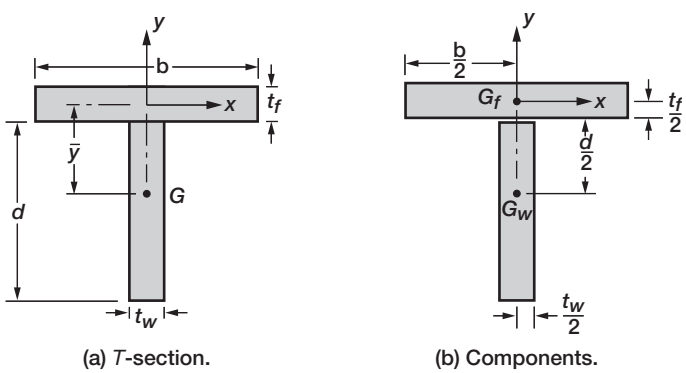

FIGURE A2-2 *Components of a* T*-section.*

$$\bar{y} = \frac{1}{A}\left[A_f \times 0 + A_w\left(\frac{d + t_f}{2}\right)\right] = \frac{A_w}{2A}\left(d + t_f\right) \qquad \text{(A2-5}b\text{)}$$

The $\bar{x}$ coordinate of the T-section is zero because the x-coordinate of the centroids of the components (G_f, G_w) lie along the y-coordinate axis. In other words, the T-section is symmetrical about the y-coordinate axis. If the centroidal location of all component areas of a section lies along the x-axis (or y-axis), then the corresponding $\bar{y}$ (or $\bar{x}$) of the total section will be zero because of symmetry.

EXAMPLE A2-2

The area and the centroid of a T-section for ($b = 12\,\text{in.}$, $t_f = 0.5\,\text{in.}$) and ($d = 0.5\,\text{m}$, $t_w = 25\,\text{mm}$) are calculated as follows.

Calculation is carried out in USCS units.

Flange:

$$A_f = 12 \times 0.5 = 6.0\,\text{in.}^2$$

$$G_f = (0, 0)\,\text{in.}$$

Web:

$$A_w = \left(\frac{50}{2.54}\right)\left(\frac{25}{25.4}\right) = 19.375\,\text{in.}^2$$

$$G_w = (0{,}10.09)\,\text{in.}$$

$$A = 6 + 19.375 = 25.375\,\text{in.}^2 = 163.71\,\text{cm}^2$$

$$\bar{x} = 0$$

$$\bar{y} = \frac{19.375}{2 \times 25.375} \times (20.185) = 7.71\,\text{in.} = 19.57\,\text{cm}$$

The centroid is biased toward the flange.

Moment of Inertia

It is the second moment of area about a reference axis. Its dimension is (L^4). It can be measured in (in.^{4}) in the USCS system. In the SI system (m^4) is the preferred unit. For a surface (S), shown in Fig. A2-1, the moments of inertia about the x-axis (I_x) and about the y-axis (I_y) are defined in terms of integrals

$$I_x = \int_S y^2 dA \qquad \text{(A2-6}a\text{)}$$

$$I_y = \int_S x^2 dA \qquad \text{(A2-6}b\text{)}$$

It is referred to as the second moment of area because an elemental area (dA) is multiplied by the square of the distance from the reference axis, here the x- and y-axis.

Radius of Gyration

A distance measure r_x (or r_y) referred to as the radius of gyration about the x-axis (or y-axis). It is defined as the square root of the ratio of moment of inertia I_x (or I_y) to the area.

$$r_x = \sqrt{\frac{I_x}{A}} \tag{A2-7a}$$

$$r_Y = \sqrt{\frac{I_Y}{A}} \tag{A2-7b}$$

The radius of gyration of an area can be considered as the distance (r_x) from a reference axis at which the entire area (A) should be concentrated to obtain the same moment of inertia of the area ($I_x = Ar_x^2$).

EXAMPLE A2-3

Calculate the moment of inertia for the rectangular area shown in Fig. A2-3.

$$\begin{aligned} A &= bd \\ I_x &= \int (bdy)y^2 \\ &= b\int_{-d/2}^{d/2} y^2 dy \\ &= \frac{b}{3}\left[y^3\right]_{-d/2}^{d/2} \\ I_x &= \frac{1}{12}bd^3 \end{aligned}$$

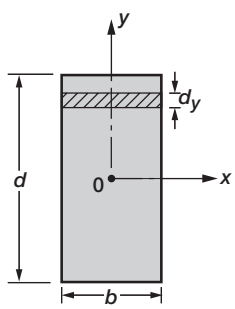

FIGURE A2-3 *Moment of inertia for a rectangle moment.*

Likewise

$$I_y = \frac{1}{12} db^3$$

$$r_x = \sqrt{\frac{I_x}{A}} = 0.2887d$$

$$r_y = 0.2887b$$

Calculate the moment of inertia and the radius of gyration for a rectangle with $b = 25\,\text{mm}$ and $d = 150\,\text{mm}$

$$A = bd = 3750\,\text{mm}^2 = 5.81\,\text{in.}^2$$

$$I_x = \frac{1}{12} bd^3 = \frac{1}{12} \times 25 \times 150^3 = 7.03 \times 10^6\,\text{mm}^4 = 16.89\,\text{in.}^4$$

$$r_x = \sqrt{\frac{16.89}{5.81}} = 1.71\,\text{in.} = 43.31\,\text{mm}$$

$$I_y = \frac{1}{12} \times 150 \times 25^3 = 0.195 \times 10^6\,\text{mm}^4 = 0.47\,\text{in.}^4$$

$$r_y = \sqrt{\frac{0.47}{5.81}} = 0.284\,\text{in.} = 7.22\,\text{mm}$$

Polar Moment of Inertia

For moment of inertia (I_x, I_y) the reference x- and y-axis lie in the plane of the area (see Fig. A2-1). We can also calculate moment of inertia about a reference axis that is normal to the area, as shown in Fig. A2-4. If the area lies in the x–y plane, the moment of inertia about the z-axis, is called the polar moment of inertia (J). It is defined as

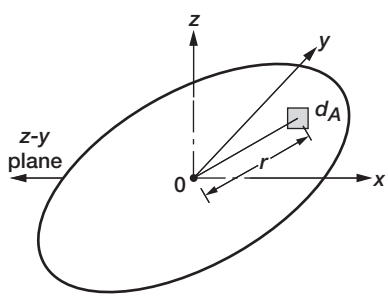

FIGURE A2-4 *Polar moment of inertia.*

$$J = \int_S r^2 dA$$

$$J = \int_S \left(x^2 + y^2\right) dA = \int_S x^2 dA + \int_S y^2 dA$$

$$J = I_x + I_y \tag{A2-8}$$

The polar moment of inertia with respect to an axis (z-coordinate axis), which is normal to the plane of the area, is equal to the moment of inertia with respect to any two perpendicular axes (x- and y-coordinate axes). All three axes must originate from the same point O, which is also called the pole. The x- and y-axis lies in the plane of the area and the z-axis is normal to the area. The three inertias (I_x, I_y, and J) are positive quantities.

EXAMPLE A2-4

Calculate the polar moment of inertia for the circular area shown in Fig. A2-5.

$$J = \int_S r^2 dA$$

The area dA of the ring of radius r and thickness dr is

$$dA = 2\pi r dr$$

$$J = 2\pi \int_0^R r^3 dr = 2\pi \left[\frac{r^4}{4}\right]_0^R = \frac{\pi R^4}{2}$$

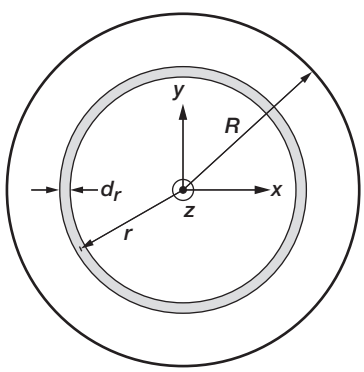

FIGURE A2-5 *Polar moment of inertia of a circular area.*

$$I_x = I_y = \frac{J}{2} = \frac{\pi R^4}{4}$$

For an area with both x- and y-axis of symmetry ($I_x = I_y$) the polar moment of inertia is twice the moment of inertia ($J = 2I_x = 2I_y = 2I$).

Product of Inertia

The product of inertia (I_{xy}) is defined with respect to two perpendicular axes (x, y) that lie in the plane of the area (see Fig. A2-1)

$$I_{xy} = \int_S xydA \tag{A2-9}$$

The product of inertia defined through two coordinates (x, y) can be positive, negative, or zero depending on the location of the two axes in the plane of the area. If any one (x or y) of the two axes (x, y) is an axis of symmetry, then the product of inertia vanishes ($I_{xy} = 0$). The product of inertia is zero for the rectangular, semicircular, and annular sections with respect to x and y, as shown in Fig. A2-6.

Parallel-Axis Theorem

This theorem is used to calculate moment of inertia (MI) in two sets of parallel orthogonal axes. One set of axis (x_g, y_g) passes through the centroid and *MI* (I_{xg}, I_{yg}) is known about this axis. It is required to calculate the *MI* about axes (x, y) that are parallel to the axes (x_g, y_g). Consider two sets of axis (x_g, y_g) and (x, y) marked in Fig. A2-7. The axes (x_g, y_g) pass through the centroid (G) of the area. The axes (x, y) are a set of parallel orthogonal axis. The moment of inertia about the x-axis (I_x) can be written as

$$I_x = \int_S y^2 dA = \int_S \left(y_g + \Delta_y\right)^2 dA = \int_S \left(y_g^2 + \Delta_y^2 + 2\Delta_y y_g\right) dA \tag{A2-10a}$$

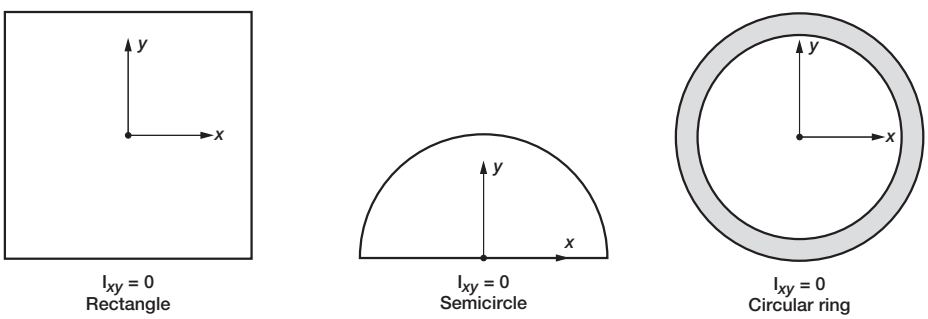

FIGURE A2-6 *Sections with zero product of inertia.*

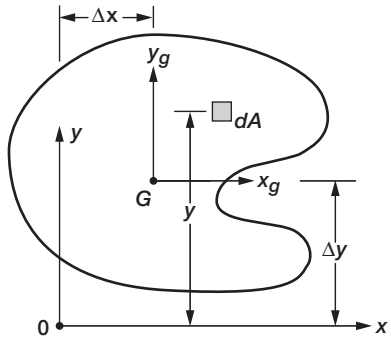

FIGURE A2-7 *Parallel axis theorem.*

The equation is simplified using the following formulas

$$\int y_g^2 dA = I_{xg}$$

$$\int \Delta_y^2 dA = A\Delta_y^2$$

$$2\Delta_y \int y_g dA = 0 \text{ because } G \text{ is the centroid} \qquad \text{(A2-10}b\text{)}$$

The moment of inertia simplifies to

$$I_x = I_{xg} + A\Delta_y^2 \qquad \text{(A2-11}a\text{)}$$

The moment of inertia about the x-axis is equal to the sum of the moment of inertia (I_{xg}) about the centroidal axis (x_g), and the product of area (A) and the square of the distance (Δ_y) between the two axes (x, x_g).

Likewise, the moment of inertia (I_y) is obtained about the y-axis.

$$\text{Likewise,} \quad I_y = I_{yg} + A\Delta_x^2 \qquad \text{(A2-11}b\text{)}$$

EXAMPLE A2-5

Calculate the moment of inertia of the T-section, shown in Fig. A2-8 about the centroidal axes.

The moment of inertia (I) of the T-section is obtained by adding the MI of the flange (I_f) and the web (I_w) as

$$I = I_f + I_w \qquad \text{(A2-12}a\text{)}$$

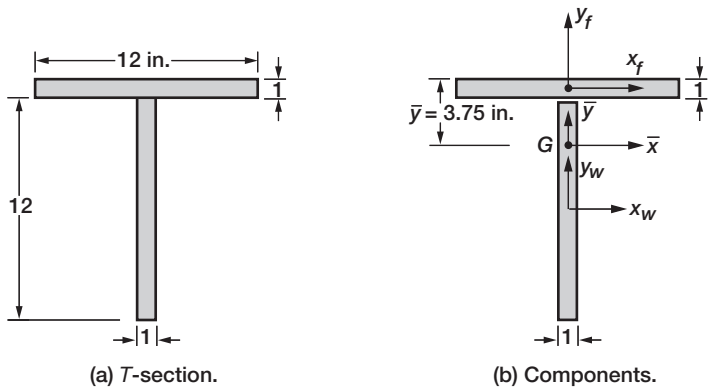

FIGURE A2-8 *Parallel axis theorem for* T*-section.*

The summation in Eq. (A2-12*a*) is valid provided all three *MI* (I, I_f, and I_w) are calculated about the same axes. The equation is not valid if any one component is calculated for a separate set of axes. For example, we cannot use the equation when I_f is calculated about x_f axis and I_w is calculated about x_w axis. The parallel axis theorem can be used to convert *MI* between parallel axes.

The *MI* of the flange segment about its own centroidal axes (x_f, y_f) is

$$A_f = 12 \times 1 = 12\,\text{in.}^2$$
$$I_{xf} = \frac{1}{12}bd^3 = \frac{1}{12}12 \times 1^3 = 1\,\text{in.}^4$$
$$I_{yf} = \frac{1}{12}1 \times 12^3 = 144\,\text{in.}^4 \qquad \text{(A2-12}b\text{)}$$

Likewise, the *MI* of the web segment about its own centroidal axes (x_w, y_w) is

$$A_w = 12 \times 1 = 12\,\text{in.}^2$$
$$I_{xw} = \frac{1}{12} \times 1 \times 12^3 = 144\,\text{in.}^4$$
$$I_{yw} = \frac{1}{12}12 \times 1^3 = 1\,\text{in.}^4 \qquad \text{(A2-12}c\text{)}$$

The centroid of the *T*-section is obtained about the (y_f or y_w) axes of symmetry and the top of the flange as shown in Fig. A2-8.

$$A = A_f + A_w = 24\,\text{in.}^2$$
$$\bar{x} = 0$$
$$\bar{y} = \frac{12 \times \frac{1}{2} + 12 \times 7}{24} = \frac{12 \times 7.5}{24} = 3.75\,\text{in.}^4 \qquad \text{(A2-12}d\text{)}$$

Here, $\bar{y}$ is measured from the top fiber of the flange.

The area of the flange biases the centroidal $\bar{x}$ axis towards it. The flange, web, and T-section have the same common y-axis ($\bar{y} = y_f = y_w$). Equation (A2-12a) is applied to calculate the MI about the y-axis as

$$I_{\bar{y}} = I_{yf} + I_{yw} = 144 + 1 = 145\,\text{in.}^4 \qquad \text{(A2-12}e\text{)}$$

The parallel axis theorem is applied to calculate the flange and web MI about the $\bar{x}$ centroidal axis as follows

$$I_{\bar{x}f} = I_{xf} + A_f(3.75 - 0.5)^2 = 1 + 12 \times 3.25^2 = 127.75\,\text{in.}^4$$

$$I_{\bar{x}w} = I_{xw} + A_w(7 - 3.75)^2 = 144 + 12 \times 3.25^2 = 270.75\,\text{in.}^4$$

$$I_{\bar{x}} = 127.75 + 270.75 = 398.5\,\text{in.}^4 \qquad \text{(A2-12}f\text{)}$$

The **parallel axis theorem for the moment of inertia** can be stated as: *the moment of inertia of an area with reference to any axis in its plane is equal to the sum of the moment of inertia with respect to a parallel axis passing through the centroid and the product of area and the square of distance between the two axes.*

The parallel axes theorem is easily extended to the **polar moment of inertia**. It is derived using the definition of polar moment of inertia using Fig. A2-9. The set of parallel axes are (x, y, z) with origin at 0, and (x_g, y_g, z_g) with origin at the centroid G.

J_0 = Polar moment of inertia about the z-axis passing through the origin (0)
J_g = Polar moment of inertia with respect to the centroid (G)
d = Distance between the two axes (z and z_g) in the x–y plane, as shown in Fig. A2-9

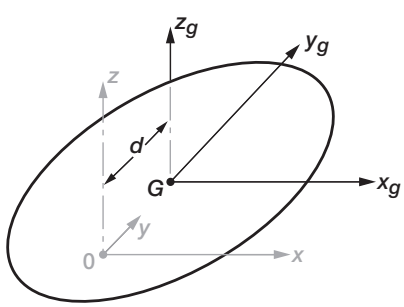

FIGURE A2-9 *Parallel axis theorem for polar moment of inertia.*

$$J_0 = I_x + I_y$$

$$= \left(I_{x_g} + A\Delta_y^2\right) + \left(I_{y_g} + A\Delta_x^2\right)$$

$$= I_{x_g} + I_{y_g} + A\left(\Delta_x^2 + \Delta_y^2\right)$$

$$J_0 = I_{xg} + I_{yg} + Ad^2$$

$$J_0 = J_g + Ad^2 \tag{A2-13}$$

The polar moment of inertia of an area with reference to any point (0) in its plane is equal to the sum of the polar moment of inertia with respect to the centroidal (G) axes and the product of area and the square of distance between the two points (0, G).

The **parallel axis theorem for the polar moment of inertia** can be stated as: *the polar moment of inertia of an area with reference to any point (0) in its plane is equal to the sum of the polar moment of inertia with respect to the centroidal (G) axis and the product of area and the square of distance between the two points (0, G).*

The parallel axes theorem can be applied to the **product of inertia**. It is derived from the definition of the product of inertia as shown in Fig. A2-10. The set of parallel axes are (x, y) with origin 0, and axes (x_g, y_g) passing through the centroid. The product of inertia (I_{xy}) with respect to (x, y) axes can be written as

$$I_{xy} = \int xydA = \int dA\left(\Delta_x + x_g\right)\left(\Delta_y + y_g\right)$$

$$= \int x_g y_g dA + \Delta_x\Delta_y \int dA + \Delta_x \int y_g dA + \Delta_y \int x_g dA \tag{A2-14}$$

From the definition of centroid $\int y_g dA = \int x_g dA = 0$

$$I_{xy} = I_{x_g y_g} + \Delta_x\Delta_y \cdot A \tag{A2-15}$$

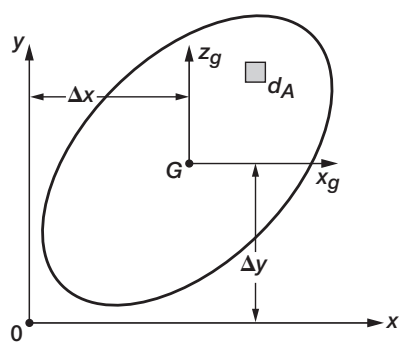

FIGURE A2-10 *Parallel axis theorem for product of inertia.*

The product of inertia I_{xy} about axes (x, y), which are parallel to the centroidal axes (x_g, y_g), is equal to the sum of the product of inertia $I_{x_g y_g}$ about the centroidal axes and the product of area and the coordinates of the centroid with respect to the parallel axes (x, y).

The **parallel axis theorem for the product of inertia** can be stated as: *the product of inertia of an area with reference to a pair of axes in its plane is equal to the sum of the product of inertia with respect to the parallel centroidal axes and the product of area and the two coordinates with reference to the axis pair.*

Moment of inertia with components (I_x, I_y, and I_{xy}) is a tensor quantity like stress (σ_x, σ_y, $\sigma_{xy} = \tau_{xy}$). It follows the tensor rules of transformation and principal axis calculation.

EXAMPLE A2-6

Calculate the moment of inertia for the triangular and rectangular areas shown in Fig. A2-11, using the parallel axis theorem. Calculate the moment of inertia about the centroidal axis ($I_{x_g y_g}$) for the triangular area shown in Fig. A2-11*a*. Calculate the moment of inertia about the *x*-axis (I_{xx}) for the rectangular area shown in Fig. A2-11*b*.

Triangular Area

$$I_{xx} = \frac{1}{12} bh^3$$

$$\bar{y}_g = \frac{h}{3} = r$$

$$I_{xx} = I_{x_g y_g} + Ar^2$$

$$\frac{1}{12} bh^3 = I_{x_g y_g} + \frac{bh}{2}\left(\frac{h}{3}\right)^2$$

$$I_{x_g y_g} = bh^3\left(\frac{1}{12} - \frac{1}{18}\right) = \frac{1}{36} bh^3$$

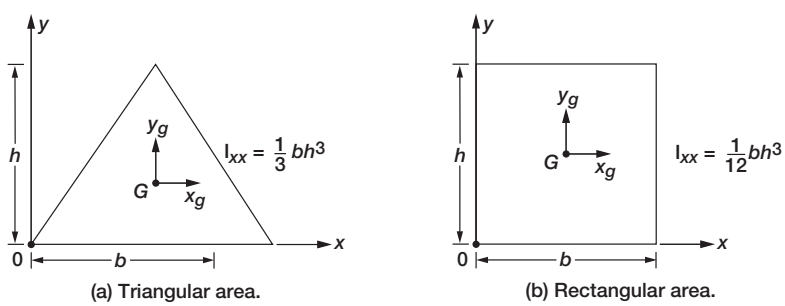

FIGURE A2-11 *Illustration for parallel axis theorem.*

The moment of inertia for the triangular area about the centroidal x-axis is $I_{gg} = \frac{1}{36}bh^3$.

Rectangular Area

$$
\begin{aligned}
I_{x_g x_g} &= \frac{1}{12}bh^3 \\
\bar{y}_g &= \frac{h}{2} = r \\
I_{xx} &= I_{x_g x_g} + Ar^2 \\
I_{xx} &= \frac{1}{12}bh^3 + bh\frac{h^2}{4} \\
I_{xx} &= \frac{1}{3}bh^3
\end{aligned}
$$

The moment of inertia for the rectangular area about the x-axis is $I_{xx} = \frac{bh^3}{3}$.

Appendix 3 Systems of Units

This book employs the International System of units (SI units) and U.S. Customary System of units (USCS) as the alternate systems. The reader is expected to be familiar with both and should be able to switch between the two systems with ease and facility. This appendix summarizes the units that have already been discussed in Chapter 1.

Base Units

In the SI system the base units of importance are: meter (m) for length (L), kilogram (kg) for mass (M), second (s) for time (T), and Kelvin (K) for temperature (t). The base units in the UCSC system are: foot (ft) for length, pound-force (lbf) for force (F), second for time, and degree Fahrenheit (°F) for temperature. Notice a difference: the SI system uses mass as a base unit, whereas force is used in the USCS base units. A newton (N) is the unit of measure for force in the SI system. Slug is the unit to measure mass in the USCS system. The unit of time is second in both systems. The dimensional formula of variables can be obtained in terms of the base units (L, M, T, and t in SI system), and (L, F, T, and t in USCS system).

Length in SI unit is measured in meter and in foot in USCS unit. One meter is a little bigger than one yard (1 m = 1.094 yard). It is a little longer than three feet (1 m = 3.281 ft). Average height of a man is (h = 1.65 m = 5.41 ft = 65 in.).

Force in SI units is measured in newton and in pound-force in USCS units. One newton is about one-quarter of one pound-force (1 N = 0.225 lbf). One pound-force is about four newtons (1 lbf = 4.25 N). We are familiar with weight, which refers to the force of gravity. In the SI system it can be measured in Newton or kilogram-force (kgf). One kilogram-force

TABLE A3-1 Conversion Factors

Quantity	*Symbol*	*Dimensional Formula*	*SI Unit*	*USCS Unit*	*Conversion Factor*
Length	L	L	Meter (m)	Foot (ft)	$1\,\text{m} = 3.281\,\text{ft}$ $1\,\text{ft} = 0.305\,\text{m}$
Mass	M	$M(FL^{-1}T^{2})$	Kilogram (kg)	Slug	$1\,\text{kg} = 0.0685\,\text{slug}$ $1\,\text{slug} = 14.59\,\text{kg}$
Force	F	$MLT^{-2}(F)$	Newton (N)	Pound-force (lbf)	$1\,\text{N} = 0.225\,\text{lbf}$ $1\,\text{lbf} = 4.448\,\text{N}$
Pressure (stress)	σ	$ML^{-1}T^{-2}(FL^{-2})$	Pascal (Pa)	Pound-force per square inch (psi)	$1\,\text{Pa} = 145 \times 10^{-6}\,\text{psi}$ $1\,\text{psi} = 6.895 \times 10^{3}\,\text{Pa}$
Moment of force, strain energy, work	U W	$ML^{2}T^{-2}(FL)$	Newton meter ($\text{N} \cdot \text{m}$) Joule (J) ($1\,\text{N} \cdot \text{m} = 1\,\text{J}$)	Foot-pound-force (ft-lbf)	$1\,\text{N} \cdot \text{m} = 0.737\,\text{ft-lbf}$ $1\,\text{ft-lbf} = 1.356\,\text{N} \cdot \text{m}$
Density (mass)	ρ	$ML^{-3}(FL^{-4}T^{2})$	Kilogram per cubic meter (kg/m^3)	Slug per cubic foot (slug/ft^3)	$1\,\text{kg/m}^3 = 0.194 \times 10^{-2}\,\text{slug/ft}^3$ $1\,\text{slug/ft}^3 = 5.154 \times 10^{2}\,\text{kg/m}^3$
Area	A	L^{2}	Square meter (m^2)	Square inch (in.^2)	$1\,\text{m}^2 = 1.55 \times 10^{3}\,\text{in.}^2$ $1\,\text{in.}^2 = 6.452 \times 10^{-4}\,\text{m}^2$
Volume	V	L^{3}	Cubic meter (m^3)	Cubic foot (cf)	$1\,\text{m}^3 = 35.31\,\text{ft}^3$ $1\,\text{cf} = 2.832 \times 10^{-2}\,\text{m}^3$
Moment of inertia of area ($I = Ar^2$)	I	L^{4}	(m^4)	in.^4	$1\,\text{m}^4 = 2.40 \times 10^{6}\,\text{in.}^4$ $1\,\text{in.}^4 = 0.416 \times 10^{-6}\,\text{m}^4$
Speed	V	LT^{-1}	Meter per second (m/s)	Foot per second (fps)	$1\,\text{m/s} = 3.28$ $1\,\text{fps} = 0.305\,\text{m/s}$
Weight density	ρ_w	$ML^{-2}T^{2}(FL^{-3})$	Newton per cubic meter (N/m^3)	Pound-force per cubic foot (lbf/ft^3)	$1\,\text{N/m}^3 = 6.366 \times 10^{-3}\,\text{lbf/ft}^3$ $1\,\text{lbf/ft}^3 = 157.1\,\text{N/m}^3$

is equal to about 10 newtons (1 kgf = 9.81 N), because gravity acceleration is ($g = 9.81\ m/s^2$). One kilogram force is little more than two pound-force (1 kgf = 2.21 lbf). One small apple weighs about one newton. There are about four apples to one pound-force and about ten smaller apples to one kilogram-force.

Mass in SI units is measured in kilogram and in slug in USCS units. One slug mass is little less than 15 kilogram-mass (1 slug = 14.6 kg and 1 kg = 0.068 slug). 1 slug = 1 lbf/(1 ft/s^2). The mass (w/g) of a man who weighs (w = 65 kgf) is about (65/9.82 = 6.63 kg = 0.45 slug).

Pressure (also stress) in SI units is measured in Pascal and in pound-force per square inch (psi) in USCS units. One atmospheric pressure is equal to about 10^5 Pa and it is also 14.5 psi. One Pa is a small pressure (1 psi = 6.89×10^3 Pa = 6.9 kPa; 1 Pa = 14.5×10^{-5} psi).

Moment of a force in SI units is measured in newton meter (N · m) and foot pound-force (ft-lbf) in USCS units. One newton meter (N · m) is about three-quarters of one foot pound-force (1 N · m = 0.738 ft-lbf; 1 ft-lbf = 1.355 N · m). Moment of force, energy, and work have the same dimensional formula (moment = energy = work = ML^2T^{-2}).

Density (mass) in SI units is measured in kilograms per cubic meter (kg/m^3) and slugs per cubic foot (slug/ft^3) in USCS units. One slug per cubic foot is equal to 515 kilogram per cubic meter (1 slug/ft^3 = 515.4 kg/m^3, or 1 kg/m^3 = 1.94×10^{-3} slug/ft^3). Density of water is 1020 kg/m^3 or 1.98 slugs/ft^3.

Factors are given in Table A3-1 to convert strength of material variables from SI units to USCS units and vice versa. The physical properties of a few quantities are listed in Table A3-2. Prefixes for use in SI units are listed in Table A3-3.

TABLE A3-2 Physical Property

Quantity	*SI Unit*	*USCS Unit*
Gravity acceleration (g)	9.81 m/s^2	32.17 ft/s^2
Atmospheric pressure (nominal)	101.3 kPa	14.7 psi
Speed of light (c)	2.998×10^8 m/s	9.836 ft/s
Speed of sound (nominal)	334.5 m/s	1087.7 ft/s
Specific weight of:		
Water	9.81 kN/m^3	62.4 lbf/ft^3
Steel	77.0 kN/m^3	490 lbf/ft^3
Aluminum	26.6 kN/m^3	169 lbf/ft^3
Reinforced concrete	23.6 kN/m^3	150 lbf/ft^3
Wood	5.5 kN/m^3	35 lbf/ft^3
Normal body temperature	37°C	98.6 °F

$\pi = 3.14159$ ($\approx 22/7$)
Golden ratio (φ) = 1.61803

TABLE A3-3 Prefixes for Multiples and Submultiples

Prefix	*Multiplication Factor*		*Symbol*
tera	10^{12}	(1 000 000 000 000)	T
giga	10^{9}	(1 000 000 000)	G
mega	10^{6}	(1 000 000)	M
kilo	10^{3}	(1 000)	k
hecto	10^{2}	(100)	h
deca	10^{1}	(10)	da
unity	10^{0}	(1)	unity
deci	10^{-1}	(0.1)	d
centi	10^{-2}	(0.01)	c
milli	10^{-3}	(0.001)	m
micro	10^{-6}	(0.000 001)	μ
nano	10^{-9}	(0.000 000 001)	n
pico	10^{-12}	(0.000 000 000 001)	p
femto	10^{-15}	(0.000 000 000 000 001)	f
atto	10^{-18}	(0.000 000 000 000 000 001)	a

Appendix 4 Sign Conventions

Uniform sign convention is useful in solving strength of materials problems. This appendix summarizes the sign convention that has already been discussed in Chapter 1.

Strength of materials deals with scalar, vector, and tensor quantities. Scalar variables (like length and area) require no sign convention. Vector quantities (like force and moment) must follow sign conventions for vectors, which we referred to as normal or n-sign convention. Tensor quantities (like stress and strain) must follow tensor of t-sign convention. Internal force (like force in a truss bar or moment in a beam), which is also referred to as stress resultant because it is related to stress, follows the t-sign convention. The two sign conventions are sufficient for strength of materials analysis. It cannot be reduced to one. Expanding to three by adding what is referred to as the "deformation sign convention" will increase confusion because it is redundant.

A vector quantity is positive when directed along the positive coordinate direction. A tensor quantity is positive when the product of its direction (f) and normal to area (n) on which it acts is positive ($n \cdot f =$ positive). The external loads (P_x and P_y) in Fig. A4-1a are positive. Both stresses (σ_A and σ_B) are positive in Fig. A4-1b.

The variables that follow n-sign convention are illustrated in Table A4-1. The t-sign convention is given in Table A4-2. Strain $\{\varepsilon\}$ back-calculated from the stress strain law ($\{\varepsilon\} = [H]\{\sigma\}$) follows the t-sign convention. Likewise, deformation $\{\beta\}$ back-calculated from internal forces using the flexibility relation ($\{\beta\} = [G]\{F\}$) follows the t-sign convention.

Sign Conventions for Equilibrium Equations

In the equilibrium equations ($[B]\{F\} = \{P\}$), aligning the load vector $\{P\}$ along the positive axes will produce the displacement vector $\{X\}$ along the positive axes. As an illustration of the

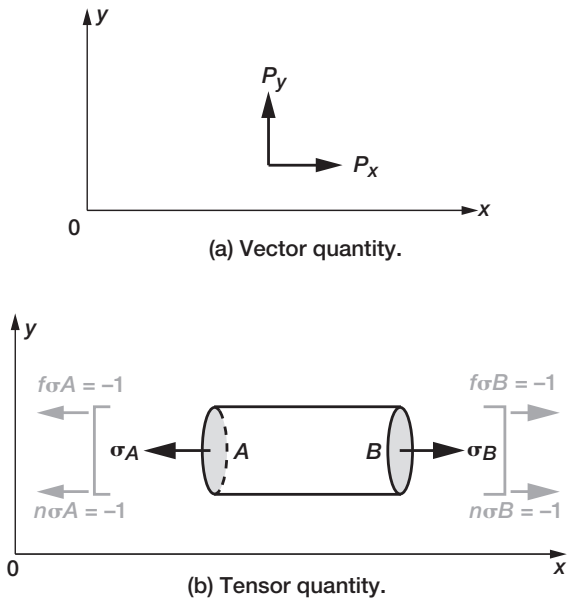

FIGURE A4-1 *Sign conventions.*

TABLE A4-1 Quantities That Follow n-Sign Convention

Quantity	*Illustration*
External axial load (P), axial reaction (R_P), and displacement (u) are positive when directed along the positive x-coordinate axis.	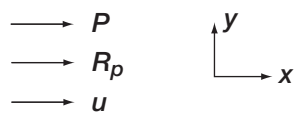
External shear load (Q), transverse reaction (R_q), and displacement (v) are positive when directed along the positive y-coordinate axis.	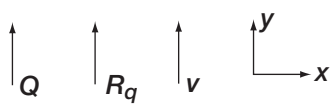
External torque (T) and angle of twist (φ) are positive when the rotational direction is along the positive x-coordinate axis.	
External Moment load (M) and rotation (θ) are positive when the rotational direction is along the positive z-coordinate axis.	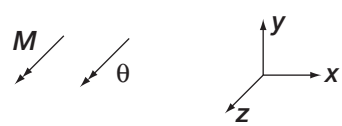

TABLE A4-2 Quantities That Follow t-Sign Convention

Quantity	*Illustration*
Normal axial stress ($\sigma = \sigma_x$) and internal axial force (F) are positive as shown. $F = \int_A \sigma dA$	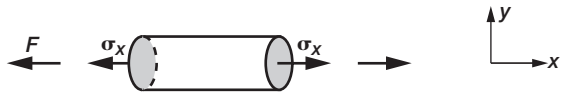
Shear stress ($\tau = \tau_{xy}$) and internal shear force (V) are positive as shown. $V = \int_A \tau dA$	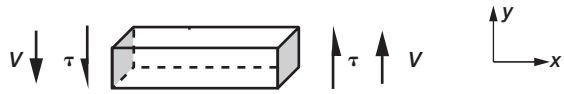
Shear stress ($\tau = \tau_{yz}$), internal torque (T), and associated angle of twist (Φ) are positive as shown. $T = \int \tau r dA$	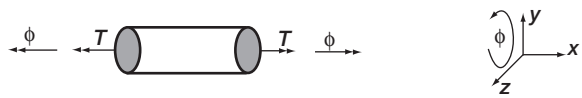
Normal stress ($\sigma = \sigma_x$), internal bending moment (M), and associated rotation (θ) are positive as shown. $M = \int \sigma z dA$	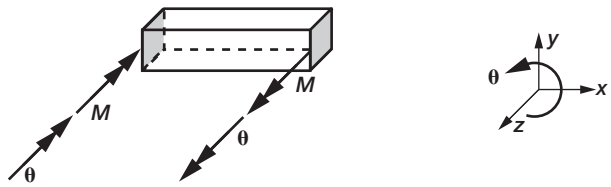

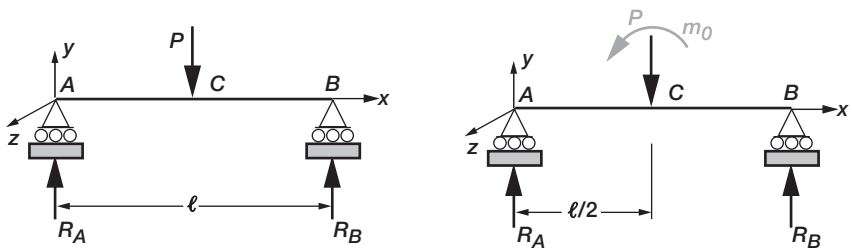

(a) Gravity load P. (b) Fictitious moment, m_0.

FIGURE A4-2 *Sign conventions for equilibrium equations.*

sign convention for the equilibrium equations, consider a beam with a load P at the center span as shown in Fig. A4-2a. The transverse EE along the positive y-direction can be written as

$$-R_A - R_B = -P$$

Likewise, the moment EE at A along the positive z-axis can be written as

$$-R_B\ell = -\frac{P\ell}{2}$$

In matrix notation, the two EE can be written as

$$\begin{bmatrix} -1 & -1 \\ 0 & -\ell \end{bmatrix} \begin{Bmatrix} R_A \\ R_B \end{Bmatrix} = \begin{Bmatrix} -P \\ \frac{-P\ell}{2} \end{Bmatrix} \tag{A4-1}$$

In the EE given by Eq. (A4-1), the load component ($-P$) is along the positive y-axis and the moment vector ($-P\ell/2$) is directed along the positive z-axis. If there is confusion in the sign convention for the equilibrium equations, the following technique can be used. Apply a fictitious force or moment along the positive axis. For example, for moment EE, a fictitious moment m_0 should be applied as shown in Fig. A4-2b. The moment EE at A can be written as

$$-R_B\ell = m_0 - \frac{P\ell}{2}$$

Then, set the fictitious moment to zero ($m_0 = 0$) to obtain the EE written in the positive direction as

$$-R_B\ell = -\frac{P\ell}{2}$$

This technique also can be used to write other equilibrium equations.

Appendix 5 Mechanical Properties of Structural Materials

Mechanical properties of materials required to solve a strength of materials problem has already been discussed in Chapter 1. This appendix lists the nominal properties for typical materials in SI and USCS units.

TABLE A5-1 Properties in SI Units

Property	*Steel*	*Aluminum*	*Reinforced Concrete*	*Wood (Douglas Fir)*
Weight density in gram-force per cubic centimeter (gf/cc) (1000 gf = 1 kgf)	7.85 (1.0 for water)	2.79	2.38	0.46
Young's modulus in Giga (10^9) pascal (GPa)	200	73	23	13
Poisson's ratio	0.3	0.3	0.15	0.3
Coefficient of thermal expansion in (10^{-6}/° C)	12	24	11	–
Yield strength in tension in 10^6 Pascal (Mpa)	250	255	–	26 (ultimate compressive strength)

TABLE A5-2 Properties in USCS Units

Property	*Steel*	*Aluminum*	*Reinforced Concrete*	*Wood (Douglas Fir)*
Weight density in pound-force per cubic inch (lbf/in.^{3})	0.285 (0.036 for water)	0.1	0.086	0.017
Young's modulus in kilopound-force per square inch (ksi)	30,000	10,000	4000	1900
Poisson's ratio	0.3	0.3	0.15	0.3
Coefficient of thermal expansion in (10^{-6}/° F)	6.6	13	6	–
Yield strength in tension in (ksi)	36	37	–	3.8 (ultimate compressive strength)

Appendix 6 Formulas of Strength of Materials

Strength of materials formulas are listed under two categories. The first pertains to the back-calculation of stress and strain from known forces. The second category can be used to calculate internal forces, reaction, and displacements in different types of beams.

Formula to Calculate Stress and Strain

The stress and strain induced in a beam because of internal forces can be calculated using the following formulas.

Axial Force

The stress σ due to an axial force F in a uniform bar with cross-sectional area A can be determined as

$$\sigma = \frac{F}{A} \tag{A6-1}$$

The strain ε due to the stress σ can be calculated from Hooke's law of the material and the Young's modulus of elasticity E as

$$\varepsilon = \frac{\sigma}{E} \tag{A6-2}$$

For an axial member we can write

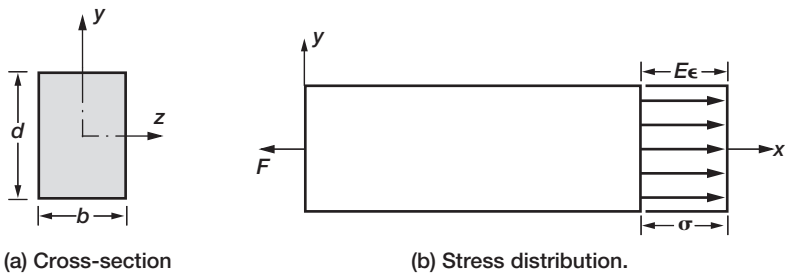

FIGURE A6-1 *Stress and strain due to axial force.*

$$\sigma = E\varepsilon = \frac{F}{A} \tag{A6-3}$$

The stress and strain distribution for a uniform bar of depth d, thickness b, and area A ($A = bd$) is illustrated in Fig. A6-1.

Shear Force

The shear stress τ in a uniform beam due to a shear force V can be determined as

$$\tau = \frac{VQ}{Ib} \qquad \tau_{\max} = 1.5\frac{V}{A} \tag{A6-4}$$

where

A area of beam
b thickness of the beam
I moment of inertia
Q first moment of the area about the neutral axis

In the shear stress formula given by Eq. (A6-4), the shear stress has a parabolic distribution along the depth about the neutral axis (or the x-axis in Fig. A6-2) because the first

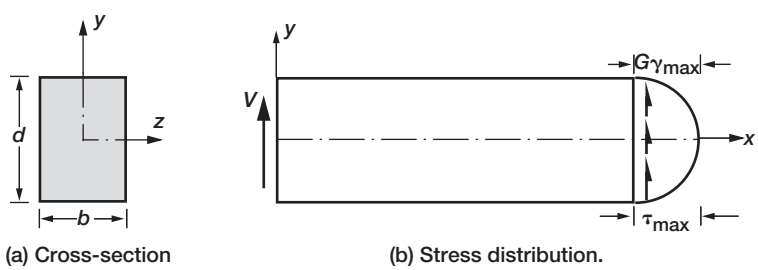

FIGURE A6-2 *Shear stress and shear strain due to shear force.*

moment of the area is a function of the y-axis. The shear stress has the maximum value $\tau_{max} = 1.5(V/A)$ at the neutral axis.

The shear strain γ due to the shear stress τ can be calculated from Hooke's law of the material and the shear modulus G, where $G = E/[2(1 + \nu)]$, as

$$\gamma = \frac{\tau}{G} \tag{A6-5}$$

The shear stress and shear strain distribution for a rectangular uniform beam of depth d, thickness b, and area A ($A = bd$) is illustrated in Fig. A6-2.

Bending Moment

The bending stress σ in a uniform beam (that is oriented along the x-axis) has a linear distribution along the y-axis, as shown in Fig. A6-3. The bending stress at the distance $\bar{y}$ from the neutral axis can be calculated from the following formula:

$$\sigma = \frac{M\bar{y}}{I} \qquad \varepsilon = \frac{\sigma}{E} \tag{A6-6}$$

where σ is the stress along the beam depth at a location $\bar{y}$ from the neutral axis and ε is the strain associated with the stress σ.

The bending stress is zero at the neutral (or x) axis, and it peaks at the extreme fibers of the beam as shown in Fig. A6-3.

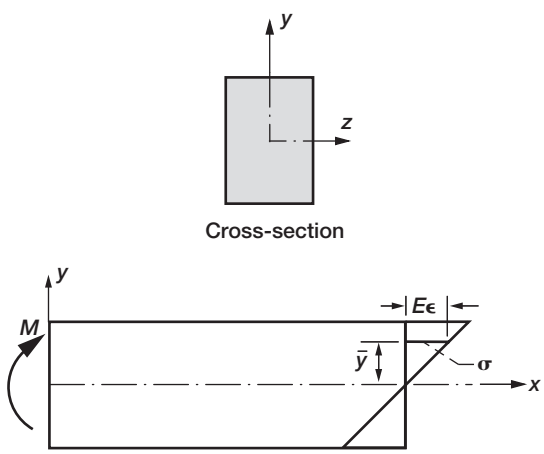

FIGURE A6-3 *Stress distribution due to bending moment.*

Torque

The shear stress τ in a uniform circular shaft that is oriented along the x-axis has a linear distribution along the y-axis, as shown in Fig. A6-4. The shear stress τ and strain γ at the distance $\bar{r}$ from the neutral axis can be calculated from the following formula

$$\tau = \frac{T\bar{r}}{J} \qquad \gamma = \frac{\tau}{G} \tag{A6-7}$$

where J ($J = 0.5\pi R^4$) is the polar moment of inertia of the circular cross-section with radius R, and $\bar{r}$ is the distance from the neutral axis, as shown in Fig. A6-4.

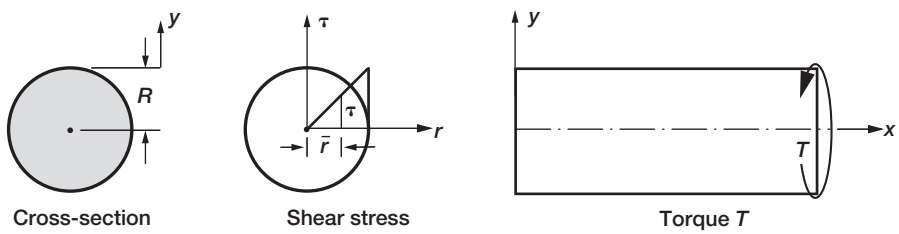

FIGURE A6-4 *Shear stress distribution due to torque.*

Beam Formulas

Formulas to calculate internal force, reaction, and displacement for a uniform beam of span (ℓ), moment of inertia (I), and Young's modulus (E) for different types of boundary conditions and loads are listed.

1. Cantilever Beam Subjected to Tip-Load *P* as Shown in Fig. A6-5.

$$V(x) = -P$$

$$M(x) = P(x - \ell)$$

$$R = P$$

$$M_R = P\ell$$

$$v(x) = \frac{Px^2}{6EI}(x - 3\ell)$$

$$v_{\max} = -\frac{P\ell^3}{3EI}$$

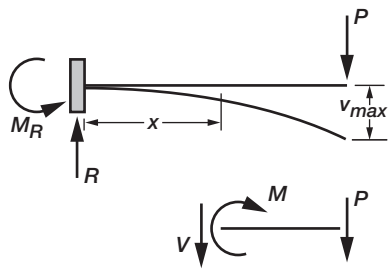

FIGURE A6-5 *Cantilever beam subjected to tip load.*

2. Cantilever Beam Subjected an In-Span Concentrated Load *P* as Shown in Fig. A6-6.

$$\text{Span: } (0 \le x \le a)$$

$$V(x) = -P$$

$$M(x) = P(x - a)$$

$$R = P$$

$$M_R = Pa$$

$$v(x) = \frac{Px^2}{6EI}(x - 3a)$$

$$\text{Span: } (a \le x \le a)$$

$$V = 0$$

$$M = 0$$

$$v(x) = \frac{Pa^2}{6EI}(a - 3x)$$

$$v_{\max} = \frac{Pa^2}{6EI}(a - 3\ell)$$

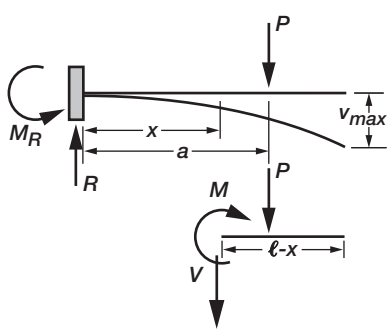

FIGURE A6-6 *Cantilever beam subjected to in-span concentrated load.*

3. Cantilever Beam Subjected to Uniform Load *p* as Shown in Fig. A6-7.

$$V(x) = -p(\ell - x)$$

$$M(x) = -\frac{p(\ell - x)^2}{2}$$

$$R = p\ell$$

$$M_R = \frac{p\ell^2}{2}$$

$$v(x) = \frac{px^2}{24EI}\left(4\ell x - x^2 - 6\ell^2\right)$$

$$v_{\max} = -\frac{p\ell^4}{8EI}$$

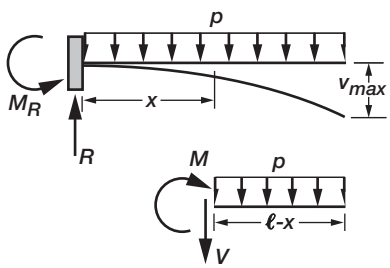

FIGURE A6-7 *Cantilever beam subjected to uniform load.*

4. Cantilever Beam Subjected to Concentrated Tip Moment M_0 as Shown in Fig. A6-8.

$$V(x) = 0$$

$$M(x) = M_0$$

$$R = 0$$

$$M_R = -M_0$$

$$v(x) = \frac{M_0 x^2}{2EI}$$

$$v_{\max} = \frac{M_0 \ell^2}{2EI}$$

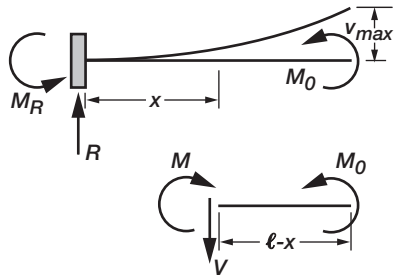

FIGURE A6-8 *Cantilever beam subjected to uniform load.*

5. Simply Supported Beam Subjected to Central Concentrated Load *P* as Shown in Fig. A6-9.

$$\text{Span: } \left(0 \le x \le \frac{\ell}{2}\right)$$

$$V(x) = -\frac{P}{2}$$

$$M(x) = \frac{P}{2}x$$

$$R_A = R_B = \frac{P}{2}$$

$$M_{RA} = M_{RB} = 0$$

$$v(x) = \frac{Px}{48EI}\left(4x^2 - 3\ell^2\right)$$

$$v_{\max} = -\frac{P\ell^3}{48EI}$$

$$\text{Symmetrical response in span}\left(\frac{\ell}{2} \le x \le \ell\right)$$

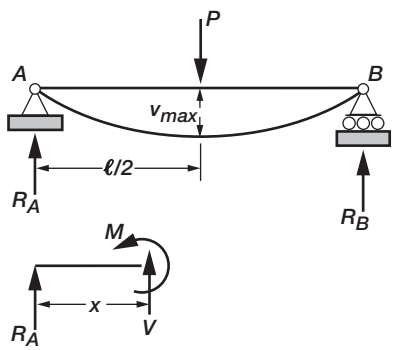

FIGURE A6-9 *Simply supported beam subjected to central concentrated load.*

6. Simply Supported Beam Subjected to Intermediate Concentrated Load *P* as Shown in Fig. A6-10.

Span: $(0 \le x \le a)$

$$V(x) = -\frac{P(\ell - a)}{\ell}$$

$$M(x) = \frac{P(\ell - a)}{\ell}x$$

$$R_A = \frac{P(\ell - a)}{\ell}$$

$$M_{RA} = 0$$

$$v(x) = \frac{P}{\ell}\frac{(\ell - a)}{6EI}x\left(x^2 + a^2 - 2\ell a\right)$$

$$v_{\max} = -\frac{P(\ell - a)\{a(2\ell - a)\}^{3/2}}{9\sqrt{3} \qquad \ell EI} \quad \text{at} \quad x = \sqrt{\text{a}\frac{(2\ell - a)}{3}}$$

Span: $(a \le x \le b)$

$$V(x) = -\frac{Pa}{\ell}$$

$$M(x) = \frac{Pa}{\ell}(\ell - x)$$

$$R_B = \frac{Pa}{\ell}$$

$$M_{RB} = 0$$

$$v(x) = \frac{Pa(\ell - x)}{\ell 6EI}\left(x^2 + a^2 - 2\ell x\right)$$

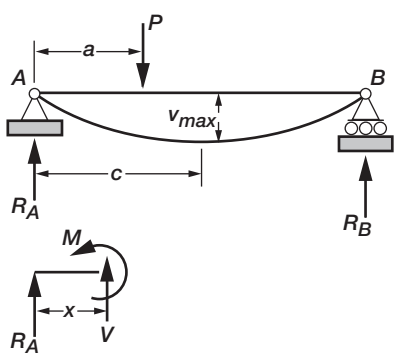

FIGURE A6-10 *Simply supported beam subjected to intermediate concentrated load.*

7. Simply Supported Beam Subjected to Uniformly Distributed Load *p* as Shown in Fig. A6-11.

$$V(x) = px - \frac{p\ell}{2}$$

$$M(x) = \frac{px}{2}(\ell - x)$$

$$R_A = R_B = \frac{p\ell}{2}$$

$$v(x) = \frac{px}{24EI}\left(2\ell x^2 - x^3 - \ell^3\right)$$

$$v_{\max} = -\frac{5p\ell^4}{384EI}$$

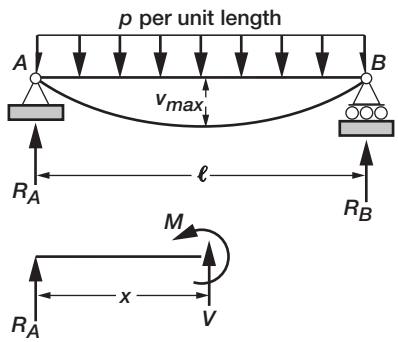

FIGURE A6-11 *Simply supported beam subjected to uniformly distributed load.*

8. Simply Supported Beam Subjected to In-Span Moment as Shown in Fig. A6-12.

Span: $(0 \le x \le a)$

$$V(x) = -\frac{M_0}{\ell}$$

$$M(x) = \frac{M_0}{\ell}x$$

$$R_A = \frac{M_0}{\ell}$$

$$M_{RA} = 0$$

$$v(x) = \frac{M_0}{6\ell EI}\left(x^2 + 3a^2 - 6a\ell + 2\ell^2\right)$$

$$v_{\max} = \frac{M_0}{9\sqrt{3}\ell EI}\left(6a\ell - 3a^2 - 2\ell^2\right)^{3/2} \quad \text{at} \quad x = \left(2a\ell - a^2 - \frac{2}{3}\ell^2\right)^{1/2} \quad \text{for} \quad a > 0.423\ell$$

when $(a = \ell)$ $\quad v_{\max} = \dfrac{0.0642}{EI}M_0\ell^2 \quad \text{at} \quad x = 0.577\ell$

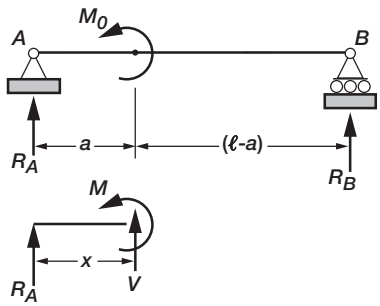

FIGURE A6-12 *Simply supported beam subjected to in-span moment.*

$$\text{Span: } (a \le x \le \ell)$$
$$V(x) = -\frac{M_0}{\ell}$$
$$M(x) = \frac{M_0}{\ell}(x - \ell)$$
$$R_B = -\frac{M_0}{\ell}$$
$$M_{RB} = 0$$
$$v(x) = \frac{M_0}{6\ell EI}\left(x^3 - 3\ell x^2 + 2\ell^2 x + 3a^2 x - 3a^2\ell\right)$$

9. Overhung Simply Supported Beam Subjected to Concentrated Load as Shown in Fig. A6-13.

$$\text{Span: } (0 \le x \le \ell)$$
$$V(x) = -\frac{Pa}{\ell}$$
$$M(x) = -\frac{Pax}{\ell}$$
$$R_A = -\frac{Pa}{\ell}$$
$$M_{RA} = 0$$
$$v(x) = \frac{Pax}{6\ell EI}(\ell^2 - x^2)$$
$$v_c = -\frac{Pa^2}{3EI}(\ell + a)$$
$$\text{Span: } (l \le x \le \ell + a)$$
$$V(x) = -P$$
$$M(x) = -P(x - a)$$
$$R_B = \frac{P}{\ell}(\ell + a)$$
$$M_{RB} = 0$$
$$v(x) = \frac{P(x - \ell)}{6EI}\left\{(x - \ell)^2 - a(3x - \ell)\right\}$$

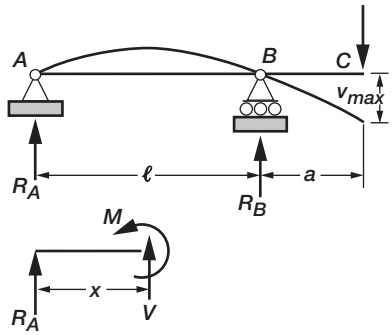

FIGURE A6-13 *Overhung simply supported beam subjected to concentrated load.*

10. Propped Cantilever Beam under Concentrated Load as Shown in Fig. A6-14.

Span: $(0 \le x \le a)$

$$V(x) = -\frac{P(\ell - a)}{3\ell^3}\left\{3\ell^2 - (\ell - a)^2\right\}$$

$$M(x) = \frac{P(\ell - a)}{3\ell^3}\left[\left\{3\ell^2 - (\ell - a)^2\right\}x + \left\{(\ell - a)^2\ell - \ell^3\right\}\right]$$

$$R_A = \frac{P(\ell - a)}{3\ell^3}\left\{3\ell^2 - (\ell - a)^2\right\}$$

$$M_{RA} = -\frac{P(\ell - a)}{2\ell^2}\left\{(\ell - a)^2 - \ell^2\right\}$$

$$v_{AB}(x) = -\frac{P(\ell - a)x^2}{12\ell^3 EI}\left[3\ell\left\{(\ell - a)^2 - \ell^2\right\} + x\left\{3\ell^2 - (\ell - a)^2\right\}\right]$$

For $\left(a = \dfrac{\ell}{2}\right)$:

Span: $\left(0 \le x \le \dfrac{\ell}{2}\right)$

$$V(x) = -\frac{11P}{16}$$

$$M(x) = \frac{P}{16}(9\ell - 11x)$$

$$R_A = \frac{11P}{16}$$

$$M_{RA} = -\frac{3P\ell}{16}$$

$$v(x) = \frac{-P}{96EI}(11x^3 - 9x^2\ell)$$

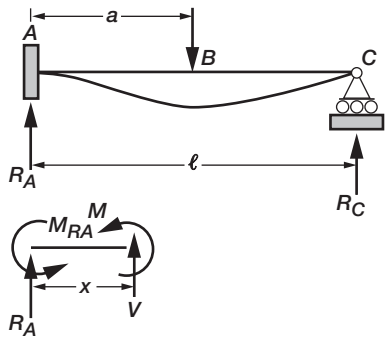

FIGURE A6-14 *Propped cantilever beam under concentrated load.*

Span: $(a \le x \le \ell)$

$$V(x) = \frac{Pa^2}{3\ell^3}(3\ell - a)$$

$$M(x) = \frac{Pa^2}{3\ell^3}(3\ell - a)(\ell - x)$$

$$R_C = \frac{Pa^2}{2\ell^3}(3\ell - a)$$

$$M_{RB} = 0$$

$$v(x) = v_{AB} + \frac{P(x-a)^3}{6EI}$$

For $\left(a = \dfrac{\ell}{2}\right)$

For span: $\left(\dfrac{a}{2} \le x \le \ell\right)$

$$V(x) = \frac{5P}{16}$$

$$M(x) = \frac{5P}{16}(\ell - x)$$

$$R_C = \frac{5P}{16}$$

$$M_{RB} = 0$$

$$v(x) = \frac{P(\ell - x)}{96EI}\left(5x^2 + 2\ell^2 - 10\ell x\right)$$

11. Propped Cantilever Beam Subjected to Uniform Load as Shown in Fig. A6-15.

$$V(x) = px - \frac{5p\ell}{8}$$
$$M(x) = \frac{p}{8}\left(4x^2 + 5\ell x - \ell^2\right)$$
$$R_A = \frac{5p\ell}{8}$$
$$R_B = \frac{3p\ell}{8}$$
$$v(x) = \frac{px^2}{48EI}(\ell - x)(2x - 3\ell)$$
$$v_{\max} = -\frac{p\ell^4}{185EI} \quad \text{at} \quad x = 0.5785\ell$$

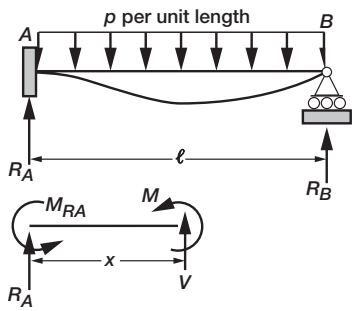

FIGURE A6-15 *Propped cantilever beam subjected to uniform load.*

12. Fixed Beam Subjected to Central Concentrated Load as Shown in Fig. A6-16.

$$V(x) = -\frac{P}{2}\left(0 \le x \le \frac{\ell}{2}\right)$$
$$M(x) = \frac{P}{8}(4x - \ell) \quad \left(0 \le x \le \frac{\ell}{2}\right)$$
$$R_A = \frac{P}{2}$$
$$M_{RA} = \frac{P\ell}{8}$$
$$R_B = \frac{P}{2}$$
$$M_{RB} = -\frac{P\ell}{8}$$
$$v(x) = \frac{px^2}{48EI}(4x - 3\ell)\left(0 \le x \le \frac{\ell}{2}\right)$$
$$v_{\max} = -\frac{P\ell^3}{192EI}$$

Response symmetrical about midspan.

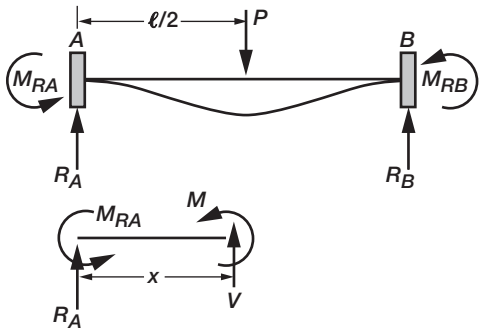

FIGURE A6-16 *Fixed beam subjected to central concentrated load.*

13. Fixed Beam Subjected to In-Span Concentrated Load as Shown in Fig. A6-17.

Span: $(0 \le x \le a)$

$$V(x) = -\frac{P}{\ell^3}(\ell - a)^2(\ell + 2a)$$

$$M(x) = \frac{P(\ell - a)^2}{2\ell^3}\{x(\ell + 2a) - a\ell\}$$

$$R_A = \frac{P(\ell - a)^2}{\ell^3}(\ell + 2a)$$

$$M_{RA} = -\frac{Pa(\ell - a)^2}{\ell^2}$$

$$v(x) = \frac{P(\ell - a)^2 x^2}{6\ell^3 EI}\{x(\ell + 2a) - 3a\ell\}$$

$$v_{\max} = -\frac{2P(\ell - a)^2 a^3}{3EI(\ell + 2a)^2} \quad \text{at} \quad x = \frac{2a\ell}{1 + 2a} \quad \text{if} \quad a > \frac{\ell}{2}$$

$$v_{\max} = -\frac{P\ell^3}{192EI} \quad \text{when} \quad \left(a = \frac{\ell}{2} = x\right)$$

Span: $(a \le x \le \ell)$

$$V(x) = \frac{Pa^2}{\ell^3}(3\ell - 2a)$$

$$M(x) = P(x - a) + M_{AB}$$

$$R_B = \frac{Pa^2}{\ell^3}(3\ell - 2a)$$

$$M_{RB} = \frac{Pa^2(\ell - a)}{\ell^2}$$

$$v(x) = -\frac{Pa^2(\ell - x)^2}{6\ell^3 EI}\{(\ell - x)(3\ell - 2a) - 3\ell(\ell - a)\}$$

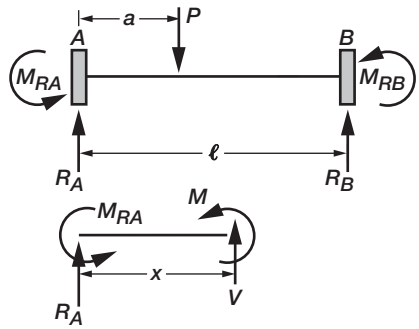

FIGURE A6-17 *Fixed beam subjected to in-span concentrated load.*

14. Fixed Beam Subjected to Uniformly Distributed Load as Shown in Fig. A6-18.

$$V(x) = \frac{p}{2}(2x - \ell)$$

$$M(x) = \frac{p}{12}\left(6\ell x - 6x^2 - \ell^2\right)$$

$$R_A = \frac{p\ell}{2}$$

$$M_{RA} = \frac{P\ell^2}{12}$$

$$R_B = \frac{P\ell}{2}$$

$$M_{RB} = -\frac{P\ell^2}{12}$$

$$v(x) = -\frac{px^2}{24EI}(\ell - x)^2$$

$$v_{\max} = -\frac{p\ell^4}{384EI} \quad \text{at} \quad \left(x = \frac{\ell}{2}\right)$$

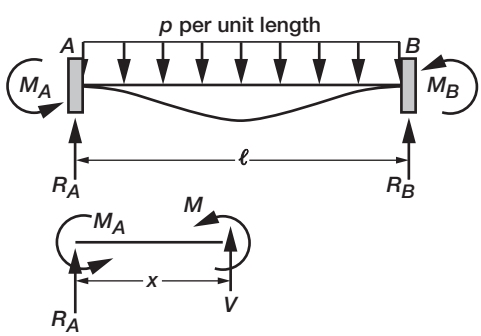

FIGURE A6-18 *Fixed beam subjected to uniformly distributed load.*

Appendix 7 Strength of Materials Computer Code

The unified theory of strength of materials has been programmed and a stand-alone FORTRAN code given in the floppy disk can be run in a PC with a FORTRAN compiler. The code is available at the website: http://www.patnaik-ue.org/ifm/. The code requires a single input data file that can be given interactively or through a data file with the extension (.dat) such as (truss-input.dat). The output file entitled (truss-output.out) contains the solution and a figure. Instructions to prepare the data file are given in this appendix. Solution to a set of five problems along with the abbreviated data files is given. The code can solve a problem using IFM, IFMD or the stiffness method. All three methods can be executed in a single run.

- Integrated Force Method (IFM)
- Dual Integrated Force Method (IFMD)
- Stiffness Method (STIFF)

A structure should be modeled using one of the five member or element types. The same element name is retained for all three methods.

Element or Member Type	*Description*
IFMTS0201	A truss (*TS*) element. It has two nodes. Each node has two displacement variables: (u, v). It has one axial force variable (F).
IFMBM0202	A beam element. It has two nodes. Each node has a displacement and a slope variable: (v, θ). Two end moments are its force variables: (M_1, M_2).

continued

Element or Member Type	*Description*
IFMTQ0201	A torsional shaft element. It has two nodes. Each node has one angle of twist variable: (φ). It has one torque variable (T).
IFMFM0203	A frame element. It has two nodes. Each node has two displacements and a slope variable: (u, v, θ). An axial force, a shear force, and a moment are its force variables (V, F, M).
IFMRC0405	A rectangular membrane element. It has four nodes. Each node has two-displacement variables: (u, v). It has five force variables (F_1, F_2, F_3, F_4, F_5).

Data is keyword driven. Keyword should be specified in uppercase letters. The following punctuation is used.

Punctuation	*Description*
:	A colon follows a keyword when data continues on subsequent lines, like COORDINATES:
!	An exclamation point follows a keyword for which there is no data, like COORDINATES IN INCHES!
$	The dollar sign at the beginning indicates a comment line. Such lines are not allowed in the middle of data lines.

Input is list-directed or in free format.

The keywords may be entered in any sequence with the following two exceptions:

1. MATERIAL PROPERTIES! Keyword must be given before CONNECTIVITY:
2. NODAL RESTRAINTS: and COORDINATES: must be specified before LOAD DEFINITIONS!

Keywords and data are described next. A "short" form is allowed for keyword. It is given in parenthesis.

Number	*Keyword*	*Description*
1	TITLE:	The following line contains a title: a maximum of 79 characters.
2	IFM/PRIMAL! (IFM!)	Indicator to use IFM (no data).
3	IFM/DUAL! (IFMD!)	Indicator to use IFMD (no data).
4	DISP/STIFFNESS! (STIFF!)	Indicator to use stiffness method (no data).
5	STATICS!	Indicator to use static analysis (no data).

6	COORDINATES IN INCHES! (CORDUIN!)	Indicates coordinates are given in inch unit (no data). SI unit user should specify coordinates in meter.
7	COORDINATES IN FEET! (CORDUFT!)	Indicates coordinates are given in unit of foot (no data).
8	COORDINATES: (COORD:)	Following lines—one line for each node—contain three pieces of data: 1. An integer (node number) 2. Three real (x, y, z coordinates) 3. Nodal restraints. Add only global restraints. The boundary conditions can be specified in subsequent "NODAL RESTRAINTS" lines. Conclude data set by adding a line containing an integer zero, three real zeros, and an integer zero: (0 0.0 0.0 0.0 0).
9	MATERIAL PROPERTIES! (MATPROP!)	Indicator for material properties in subsequent keywords (no data).
10	YOUNGS MODULUS IN KSI! (MODUKSI!)	Indicates Young's modulus is given in ksi unit (no data).
11	YOUNGS MODULUS IN PSI! (MODUPS!)	Indicates Young's modulus is given in psi unit (no data). SI unit user should specify Young's modulus in Pascal unit.
12	DENSITY IN LBS/CUBIC IN! (DENUPCI!)	Indicates the density is given in pound-mass per cubic inch (no data). SI unit user should specify density in newton per cubic meter.
13	ISOTROPIC:	Subsequent lines, one line for each isotropic material, contain four real numbers. 1. Young's modulus 2. Poisson's ratio 3. Weight density 4. Thermal coefficient Add a line containing four real zeroes, after all materials have been specified: (0.0 0.0 0.0 0.0). Note: Material is identified by a number in the given sequence.
14	END MATERIAL PROPERTIES! (ENDMATPROP!)	Indicates completion of material data (no data).
15	CONNECTIVITY:	Specified for each of the five types of elements. One line for each element containing four pieces of information: 1. Element name 2. Material number 3. Sectional properties 4. Nodes

continued

Number	Keyword	Description
		After all the elements have been specified, add an additional line containing the character string "NULLELEM" within a pair of single quotes followed by an integer zero and a real zero: "NULLELEM" 0.0 0 ● For truss element (IFMTS0201) The line for each element contains the 9-character element name within a pair of single quotes, 'IFMTS0201,' an integer for material number, a real for bar area, and an integer list of two nodes. ● For beam element (IFMBM0202) The line for each element contains the 9-character element name within a pair of single quotes, 'IFMBM0202,' an integer for material number, three real numbers for depth, area, moment of inertia, and a list of two nodes. ● For torsion element (IFMTQ0201) The line for each element contains the 9-character element name within a pair of single quotes, 'IFMTQ0201,' an integer for material number, two real numbers for shaft diameter and polar moment of inertia, and two integers for two nodes. ● For frame element (IFMFM0203) The line for each element contains the 9-character element name within a pair of single quotes, 'IFMFM0203,' an integer for material number, three real numbers for element depth, area and moment of inertia, and an integer list of two nodes. ● For membrane element (IFMRC0405) The line for each element contains the 9-character element name within a pair of single quotes, 'IFMRC0405,' an integer for material number, a real for membrane thickness, and an integer list of four nodes given in a counterclockwise order.
16	NODAL RESTRAINTS: (NREST:)	Subsequent lines, one line for each restrained node containing three to five integers—the node number, number of degree of freedom to be restrained, and a list of restrained degrees of freedom. 1–is for restraint in the x-direction [Exception: for beam it is y direction, and for torsion it is φ direction.] 2–is for restraint in the y-direction [Exception: for beam it is θ direction.] 3–is for restraint in the z-direction or θ-direction for frame After all restraints have been specified, add an additional line containing two integer zeros: 0 0. Note: The boundary conditions are specified in the above data lines.

		In the COORDINATE data lines add: (a) For truss, beam and membrane—include the third restraints (3) at each node. (b) For torsion element include second and third restraints (2 3) at each node.
17	LOAD DEFINITIONS! (LODDEF!)	Indicator for load definitions in subsequent keywords (no data).
18	LOADS IN KIPS! (LDUKIPS!)	Indicates load is given in kip (no data).
19	LOADS IN POUNDS! (LDULBS!)	Indicates load is given in lbf (no data). SI unit user should specify load in newton.
20	SETTLING IN INCHES! (SSUIN!)	Indicates settling of support is given in inch (no data). SI unit user should specify settling in meter.
21	CONCENTRATED FORCES: (CFORC:)	The next line contains an integer, which is the load definition number. One or more of the load definitions may be combined to form a load condition. Subsequent lines, one line for each node at which an external force is specified for the load definition. It should contain: ● Two integers (node number, total degrees of freedom) ● One to three pairs: an integer and a real (degree of freedom and load value) Add a line with two integer zeroes to conclude the load definition: 0 0 0. ● Subsequent lines for the next load definition. It begins with an integer and proceeds as described above. ● Add a line with one integer zero after all load definitions have been specified: 0.
22	THERMAL LOADS: (THERM:)	Subsequent line contains two integers—the load definition number and one (1) or two (2). The integer (1 or 2) pertains to pieces of temperature data at a node. One line for each node at which a temperature is applied for (the load definition): ● Truss and membrane structures: one integer (node number) and one real (being the temperature at that node). ● Beam and frame: one integer (node number), two reals: (temperature at the neutral axis, and variation across the depth—measured from the upper fiber to lower fiber). ● Add a line with one integer zero and one real zero for truss and membrane structures: 0 0.0. ● Add a line with one integer zero and two real zeros for beam and frame: 0 0.0 0.0.

continued

Number	Keyword	Description
		● Subsequent lines for the next load definition. It begins with an integer and proceeds as described above. ● Add a line with one integer zero after all load definitions have been specified: 0.
23	SETTLING OF SUPPORTS: (SETL:)	● Subsequent line contains an integer, being the load definition number. ● Next lines (one line for each node) at which a settling of support occurs. ● It contains two integers and one to three pairs of an integer and a real (node number, number of degrees of freedom, a list containing the degree of freedom and amount of settling). ● Add a line with two integer zeroes to conclude the load definition. ● Subsequent lines for the next load definition. It begins with an integer and proceeds as described above. ● Add a line with one integer zero after all load definitions have been specified: 0.
24	END LOAD DEFINITIONS!	Indicates the completion of load definition data (no data).
25	LOAD CONDITIONS: (LCON:)	Subsequent line contains an integer being the load condition number. The next lines (one line for each load definition) contain ● a four-character name within a pair of single quotes like 'CONC' for concentrated forces, 'TERM' for thermal loads, and 'SETL' for settling of support loads; and ● an integer being the load definition number. Conclude each load condition by adding a line containing the character string 'NULL' within a pair of single quotes, and an integer zero: 0. Note: If this keyword is absent, then all load definitions are combined into one load condition, which is the default.

The input and output data files are included for the five examples. The files obtained from the computer printout are abbreviated, edited, and formatted to fit the book page. The abridging process has not eliminated any information required to prepare the input data files. The problem set includes:

1. A three-bar truss
2. A propped beam
3. A shaft under torsion
4. A two-member frame
5. A cantilevered beam modeled as a single finite element

Problem 1—A Three-Bar Truss

This problem is solved in SI units using IFM. Length, displacement, and settling of support are measured in meters (m). Load, bar force, and reaction are measured in newton (N). Temperature is measured in degrees Celsius (°C).

The geometrical parameters, its four nodes and three bar members are shown in Fig. A7-P1 and this forms part of the output. The truss is made of steel with Young's modulus

Problem 1: Input data file (Truss-3bar.dat).

IFM is used to solve a three-bar truss for mechanical, thermal and settling of support loads. SI Unit is used.

TITLE:				
Three-bar truss analysis for mechanical thermal and settling loads.				
IFM!				
STATICS!				
COORDINATE IN INCHES!				
CORDINATES:	(In SI unit it is given in meter.)			
1	0.0	0.0	0.0	3
... continue for nodes 2 and 3				
4	2.54	2.54	0.0	3
0	0.0	0.0	0.0	0
MATERIAL PROPERTIES!				
YOUNG'S MODULUS IN PSI!				
ISOTROPIC:	(In SI unit it is given in Pascal))			
2.0E11	0.3	7.85E3	12.0E-06	
0.0	0.0	0.0	0.0	
END MATERIAL PROPERTIES!				
CONNECTIVITY:				
'IFMTS0201'	1	6.45E-4	1	2
... continue for elements 2 and 3				
'NULLELEM'	0	0.0		
NODAL RESTRAINTS:				
2	2	1	2	
... continue for nodes 3 and 4				
0	0			
LOAD DEFINITIONS!				
LOADS IN POUNDS! (In SI unit it is given in newton)				
CONCENTRATED FORCES:				
1				
1	2	1	2224.0	2	4448.0
0	0			
0				
SETTLING OF SUPPORTS:				
		(In SI unit it is given in meter)		
1				
2	1	2	1.27E-2	
0	0			
0				
THERMAL LOADS:				
1	1			
1	100.0			
0	0.0			
0	0			
END LOAD DEFINITIONS!				
LOAD CONDITIONS:				
1				
'SETL'	1			
'CONC'	1			
'TERM'	1			
'NULL'	0			
0				

OUTPUT FILE

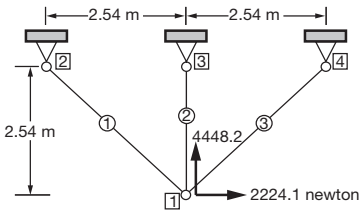

IFM/ANALYZERS RESULTS
For the IFM Method...

Forces {*F*} scaled by 10E+3 are...

Element	GFof	Load Case 1
1	1	83.9
2	2	−120.9
3	3	80.7

The displacements {*X*} scaled by 10E−3 are...

Node	DOF 1	DOF 2	DOF 3
Load Case 1			
1	−5.5	0.85	0.00
2	0.00	12.70	0.00
3	0.00	0.00	0.00
4	0.00	0.00	0.00

The reactions {*R*} scaled by 10E+3 are ...

Node	DOF 1	DOF 2	DOF 3
Load Case 1			
1	0.0	0.0	
2	−59.3	59.3	
3	0.0	−120.9	
4	57.1	57.1	

The stresses scaled by 10E+6 are...

	SigmaX	
Element ID	Node 1	Node 2
Load Case 1		
1	130.1	
2	−187.4	
3	62.6	

FIGURE A7-P1

($E = 200\,\text{GPa}$), (Poisson's ratio $= 0.3$—not used), (weight density $\rho_w = 7.85 \times 10^3$ N per m^3—not used), and coefficient of thermal expansion ($\alpha = 12 \times 10^{-6}$ per °C). The areas of the three bars are: ($A_1 = 6.45 \times 10^{-4}$, $A_2 = 6.45 \times 10^{-4}$, $A_3 = 12.90 \times 10^{-4}$) m^2. It is subjected to mechanical load at node 4, ($P_x = 2.224 \times 10^3$ and $P_y = 4.448 \times 10^3$) N. The change in temperature is specified for node 1 as ($\Delta T = 100°$ C). Support node 2 settles by ($\Delta y = 1.27 \times 10^{-2}$) meter. Calculate the response consisting of bar force, bar stress, reaction, and nodal displacements.

The input data file is designated "Truss-3bar.dat" and the generated output file is titled "truss-3bar.ifmout." The problem is solved using IFM. The input and output files with some editing and abbreviation are listed in the two columns.

Bar Temperature

Bar temperature is calculated as the average of the temperatures of its two connecting nodes. A node is at ambient temperature ($\Delta T = 0$), unless specified otherwise. For the three-bar truss the bar temperatures are as follows:

1. Bar 1: $(\Delta T)^{\text{bar}-1} = (1/2)[(\Delta T)^{\text{node}-1} + (\Delta T)^{\text{node}-2}] = (100 + 0)/2 = 50°\text{C}$
2. Bar 2: $(\Delta T)^{\text{bar}-2} = (1/2)[(\Delta T)^{\text{node}-1} + (\Delta T)^{\text{node}-3}] = (100 + 0)/2 = 50°\text{C}$
3. Bar 3: $(\Delta T)^{\text{bar}-3} = (1/2)[(\Delta T)^{\text{node}-1} + (\Delta T)^{\text{node}-4}] = (100 + 0)/2 = 50°\text{C}$

All three bars are subjected to a temperature differential of $[(\Delta T)^{\text{bar}-1} = 50°\text{C}]$ because of change of temperature of node 1 by $(\Delta T)^{\text{node}-1} = 100°\text{C}$. The truss has three force unknowns ($n = 3$), two displacement unknowns ($m = 2$), and it is one-degree indeterminate ($r = n - m = 1$).

Problem 2—A Propped Beam

This problem is solved in USCS units using the stiffness method. Length, displacement, and settling of support are measured in inch (in.). Load, bar force, and reaction are measured in pound force (lbf). Temperature is measured in degrees Fahrenheit (°F).

The geometrical parameters, its two nodes and the single beam member are shown in Fig. A7-P2 and this forms part of the output. It is made of steel with Young's modulus ($E = 30{,}000$ ksi, Poisson's ratio $= 0.3$—not used), weight density ($\rho_w = 0.289$ lbf per in.^{3}—not used), and coefficient of thermal expansion ($\alpha = 6.6 \times 10^{-6}$ per °F). The depth, area, and moment of inertia of the beam are: ($d = 7.0$, $A = 24.5$, and $I = 100$ in.^{4}). It is subjected to a bending moment at node 2, ($M = 5000$ in.-lbf, temperature at node 2: $(\Delta T)^{\text{na}} = 150°\text{F}$ and $(\nabla T = -100)°\text{F/in.}$). Calculate the response consisting of moment, reaction, and nodal displacement.

The input data file is designated "Proppedbeam.dat" and the generated output file is titled "Proppedbeam.stiffout." Both files with some editing and abbreviation are listed in the two columns.

Beam Temperature

Beam temperature is specified by two pieces of data at a node: the temperature at the neutral axis: $(\Delta T)^{\text{na}}$ and variation through depth (∇T). The two data for a member is obtained as the average of the temperatures of its two connecting nodes. For the propped beam temperatures are as follows:

Problem 2: Input data file (Proppedbeam.dat).

Stiffness method is used to solve a propped beam for mechanical, thermal, and settling of support loads. USCS unit is used.

TITLE: Beam analysis by stiffness method for mechanical thermal and settling loads.						
STIFF!						
STATICS!						
COORDINATE IN INCHES!						
CORDINATES:						
1	0.0	0.0	0.0	3		
2	100.0	0.0	0.0	3		
0	0.0	0.0	0.0	0		
MATERIAL PROPERTIES!						
YOUNG'S MODULUS IN KSI!						
ISOTROPIC:						
30000.0	0.3	0.289	6.6E-06			
0.0	0.0	0.0	0.0			
END MATERIAL PROPERTIES!						
CONNECTIVITY:						
'IFMBM0202'	1	7.0	24.5	100.0	1	2
'NULLELEM'	0	0.0	0.0	0.0		
NODAL RESTRAINTS:						
1	2	1	2			
2	1	1				
0	0					
LOAD DEFINITIONS!						
LOADS IN POUNDS!						
CONCENTRATED FORCES:						
1						
2	1	2	5000.0			
0	0					
0						
SETTLING OF SUPPORTS:						
1						
2	1	1	0.125			
0	0					
0						
THERMAL LOADS:						
1	2					
2	150.0	–100.0				
0	0.0	0.0				
0	0					
END LOAD DEFINITIONS!						
LOAD CONDITIONS:						
1						
'CONC'	1					
'TERM'	1					
'SETL'	1					
'NULL'	0					

OUTPUT FILE

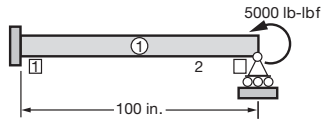

IFM/ANALYZERS RESULTS
For the Stiffness Method...

Forces {F} scaled by 10E+3 are...

Element	GFof	Load Case 1
1	1	–102.1
	2	5.0

The displacements {X} scaled by 10E–3 are...

Node	DOF 1	DOF 2	DOF 3
Load Case 1			
1	0.00	0.00	0.00
2	125.00	3.1	0.00

The reactions {R} scaled by 10E+3 are...

Node	DOF 1	DOF 2	DOF 3
Load Case 1			
1	1.07	102.1	0.00
2	–1.07	0.0	0.00

Stresses are...

	SigmaX	TauXY
Load Case 1		
1	3575.0	–43.7

FIGURE A7-P2

Member 1:

1. $(\Delta T)^{\text{na}} = (1/2)[(\Delta T)^{\text{na-node-1}} + (\Delta T)^{\text{na-node-2}}] = (0 + 150)/2 = 75°\text{F}$
2. $(\nabla T) = (1/2)[(\nabla T)^{\text{node-1}} + (\nabla T)^{\text{node-2}}] = (0 - 100)/2 = -50°\text{F}$

The propped beam has two force unknowns ($n = 2$), one displacement unknown ($m = 1$), and it is one-degree indeterminate ($r = n - m = 1$).

Problem 3—A Shaft under Torsion

This problem is solved in SI units using IFM. Length, displacement, and settling of support are measured in meter (m). Load, bar force, and reaction are measured in newton (N). Angle is measured in radian.

The geometrical parameters, its three nodes, and two shaft members are shown in Fig. A7-P3 and this forms part of the output. It is made of steel with modulus of rigidity ($G = 75 \times 10^9$, Poisson's ratio $= 0.3$—not used), weight density ($\rho_w = 7.85 \times 10^3$ N per m^3—not used), and coefficient of thermal expansion ($\alpha = 12 \times 10^{-6}$ per °C—not used). The diameter and polar moment of inertia are: ($d = 10$ cm, $J = 9.82 \times 10^{-6}\ m^4$). It is subjected to a torque at the center span ($T = 100$ N·m). Calculate the response consisting of torque, reaction, and angle of twist.

The shaft has two force unknowns ($n = 2$), one displacement unknown ($m = 1$), and it is one-degree indeterminate ($r = n - m = 1$). The input data file is designated "shaft.dat" and the generated output file is titled "shaft.ifmout." Both files with some editing and abbreviation are listed in the two columns.

Problem 3: Input data file (Shaft.dat).

IFM is used to solve torsion of a shaft for mechanical load. SI unit is used.

TITLE:				
Torsion of a shaft analysis for mechanical load.				
IFM!				
STATICS!				
COORDINATE IN INCHES!				
CORDINATES:	(In SI unit it is given in meter.)			
1	0.0	0.0	0.0	23
2	2.0	0.0	0.0	23
3	4.0	0.0	0.0	23
0	0.0	0.0	0.0	0
MATERIAL PROPERTIES!				
YOUNG'S MODULUS IN PSI!				
ISOTROPIC:	(In SI unit it is given in Pascal.)			
75.0E9	0.3	7.85E3	12.0E-6	
0.0	0.0	0.0	0.0	
END MATERIAL PROPERTIES!				
CONNECTIVITY:				
'IFMTQ0201'	1	0.1	9.82E-6	1	2
'IFMTQ0201'	1	0.1	9.82E-6	2	3
'NULLELEM'	0	0.0			
NODAL RESTRAINTS:				
1	1	1		
3	1	1		
0	0			
LOAD DEFINITIONS!				
LOADS IN POUNDS! (In SI unit it is given in newton.)				
CONCENTRATED FORCES:				
1				
2	1	1	100.0	
0	0			
0				
END LOAD DEFINITIONS!				
LOAD CONDITIONS:				
1				
CONC'	1			
'NULL'	0			
0				

OUTPUT

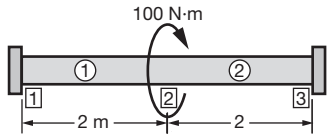

IFM/ANALYZERS RESULTS
For the IFM Method...

Forces {F} are...

Element	GFof	Load Case 1
1	1	50.0
2	2	–50.0

The displacements {X} scaled by 10E–3 are...

Node	DOF 1	DOF 2	DOF 3
Load Case 1			
1	0.00	0.00	0.00
2	0.35	0.00	0.00
3	0.00	0.00	0.00

The reactions {R} are...

Node	DOF 1	DOF 2	DOF 3
Load Case 1			
1	–50.0	0.00	0.00
2		0.00	0.00
3	–50.0	0.00	0.00

The stresses scaled by 10E3 are...

	TauXY	
Element ID	Node 1	Node 2
Load Case 1		
1	254.6	
2	–254.6	

FIGURE A7-P3

Problem 4—A Frame

This problem is solved in USCS units using the stiffness method. Length, displacement, and settling of support are measured in inch (in.). Load, bar force, and reaction are measured in pound-force (lbf). Temperature is measured in degrees Fahrenheit (°F).

Problem 4: Input data file (Frame.dat).

Stiffness method is used to solve a simple frame for mechanical load.

USCS unit is used.

TITLE:						
Frame analysis for mechanical load.						
STIFFI						
STATICSI						
COORDINATE IN INCHESI						
CORDINATES:						
1	0.0	0.0	0.0	0		
2	50.0	100.0	0.0	0		
3	100.0	50.0	0.0	0		
MATERIAL PROPERTIESI						
YOUNG'S MODULUS IN KSII						
ISOTROPIC:						
30E3	0.3	0.289	6.6E-06			
0.0	0.0	0.0	0.0			
END MATERIAL PROPERTIESI						
CONNECTIVITY::						
'IFMFM0203'	1	12.0	72.0	864.0	1	2
'IFMFM0203'	1	12.0	72.0	864.0	2	3
'NULLELEM'	0	0.0				
NODAL RESTRAINTS:						
1	3	1	2	3		
3	3	1	2	3		
0	0					
LOAD DEFINITIONSI						
LOADS IN POUNDSI						
CONCENTRATED FORCES:						
1						
2	1	2	–1000.0			
0	0					
0						
END LOAD DEFINITIONSI						

OUTPUT FILE

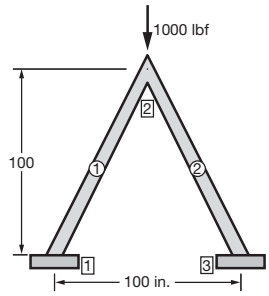

Symmetrical fram e

IFM/ANALYZERS RESULTS
For the Stiffness Method...

Forces {*F*} are...

Element	GFof	Load Case 1
1	1	–557.4
	2	–3.2
	3	179.5
2	4	–557.4
	5	3.2
	6	–179.5

The displacements {*X*} scaled by 10E–3 are...

Node	DOF 1	DOF 2	DOF 3
Load Case 1			
1	0.00	0.00	0.00
2	0.00	–0.03	0.00
3	0.00	0.00	0.00

The reactions {*R*} are...

Node	DOF 1	DOF 2	DOF 3
Load Case 1			
1	246.4	500.0	179.5
2			
3	–246.4	500.0	–179.5

The stresses are...

	SigmaX		TauXY	
Element ID	Node 1	Node 2	Node 1	Node 2
Load Case 1				
1	9.0		–0.04	
2	6.5		0.04	

FIGURE A7-P4

The geometrical parameters, its three nodes, and two frame members are shown in Fig. A7-P4 and this forms part of the output. It is made of steel with Young's modulus ($E = 30{,}000$ ksi, Poisson's ratio $= 0.3$—not used), weight density ($\rho_w = 0.289$ lbf per in.^{3}—not used), and coefficient of thermal expansion ($\alpha = 6.6 \times 10^{-6}$ per °F—not used). The depth, area, and moment of inertia of the beam are: ($d = 12$, $A = 24.5$, and $I = 864$ in.^{4}). It is subjected to a gravity at node 2, ($P = 1000$ lbf). Calculate the response consisting of moment, reaction, and nodal displacement.

The propped beam has six force unknowns ($n = 6$), three displacement unknowns ($m = 3$), and it is three-degrees indeterminate ($r = n - m = 3$). The input data file is designated "Frame.dat" and the generated output file is titled "Frame.stiffout." Both files with some editing and abbreviation are listed in the two columns.

Problem 5—A Cantilevered Beam Modeled as a Single Finite Element

This problem is solved in SI units using IFM. Length, displacement, and settling of support are measured in meter (m). Load, bar force, and reaction are measured in newton (N). Angle is measured in radian.

The geometrical parameters, its four nodes, and a single finite element, are shown in Fig. A7-P5 and this forms part of the output. It is made of steel with Young's modulus ($E = 200$ GPa), (Poisson's ratio $= 0.3$), (weight density $\rho_w = 7.85 \times 10^3$ N per m^3—not used), and coefficient of thermal expansion ($\alpha = 12 \times 10^{-6}$ per °C—not used). The beam is three meter long, 25 cm deep with a uniform thickness of 2.5 cm. It is subjected to equal mechanical load at node 2 and 3, ($P = -500$ N). Calculate the response consisting of bar force, bar stress, reaction, and nodal displacements.

The finite element model has five force unknowns ($n = 5$), five displacement unknowns ($m = 5$), and it is a determinate structure. The input and output files with some editing and abbreviation are listed in the two columns.

Problem 5: Input data file (FEA-Beam.dat).

IFM is used to solve a cantilevered beam modeled as a single finite element.

SI Unit is used.

TITLE:						
Finite element solution of a beam for mechanical loads.						
SI unit is used.						
IFM!						
STATICS!						
COORDINATE IN INCHES!						
CORDINATES: (In SI unit it is given in meter.)						
1	0.0	0.0	0.0	3		
2	3.0	0.0	0.0	3		
3	3.0	0.25	0.0	3		
4	0.0	0.25	0.0	3		
0	0.0	0.0	0.0	0		
MATERIAL PROPERTIES!						
YOUNG'S MODULUS IN PSI!						
ISOTROPIC: (In SI unit it is given in Pascal)						
2.0E11	0.3	7.85E3	6.6E-06			
0.0	0.0	0.0	0.0			
END MATERIAL PROPERTIES!						
CONNECTIVITY:						
'IFMRC0405'	1	0.025	1	2	3	4
'NULLELEM'	0	0.0				
NODAL RESTRAINTS:						
1	2	1	2			
4	1	1				
0	0					
LOAD DEFINITIONS!						
LOADS IN POUNDS! (In SI unit it is given in newton)						
CONCENTRATED FORCES:						
1						
2	1	2	–500.0			
3	1	2	–500.0			
0	0					
0						
END LOAD DEFINITIONS!						

OUTPUT

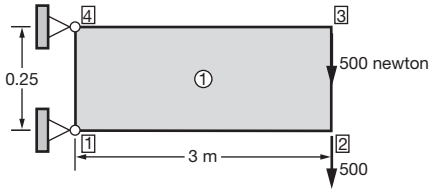

IFM/ANALYZERS RESULTS
For the IFM Method...

The forces {*F*}, scaled by 10E+3 are...

Element	GFof	Load Case 1
1	1	0.0
	2	144.0
	3	–0.17
	4	0.5
	5	–4.0

The displacements {*X*} scaled by 10E–3 are...

Node	DOF 1	DOF 2	DOF 3
Load Case 1			
1	0.00	0.00	0.00
2	–0.09	–1.04	0.00
3	0.09	–1.04	0.00
4	0.00	0.00	0.00

The reactions {*R*} are...

Node	DOF 1	DOF 2	DOF 3
Load Case 1			
1	12000.0	1000.0	0.0
2			0.0
3			0.0
4	–12000.0		

The stresses scaled be 10E3 are...

Element ID	Location	SigmaX	SigmaY	TauXY
Load Case 1				
1	centroid	0.0	–6.7	–160.0
	midpt 1-2	5760.0	–6.7	–160.0
	midpt 2-3	0.0	13.3	–160.0
	midpt 3-4	5760.0	–6.7	–160.0
	midpt 4-1	0.0	–26.7	–160.0

FIGURE A7-P5

Appendix 8 Answers

Chapter 1

1-1 $\varphi = 2.618\ (10^{-2})$ rad, (L^0)
$\beta_\varphi = 1.745\ (10^{-2})$ rad, (L^0)
$A = 6.452\ (10^{-3})\ m^2$, (L^2)
$\beta_{axial} = 6.35\ (10^{-3})$ rad, (L^1)
$\alpha = 11.8\ (10^{-6})$ rad, (°C)
$\kappa = 3.94\ (10^{-3})$/m, (L^{-1})
$u = 2.54\ (10^2)$ m, (L)
$F = 4448$ N, (MLT^{-2})
$L = 3.81$ m, (L)
m = 14590 kg, (M)
$\rho_m = 7.83\ (10^2)\ kg/m^3\ (ML^{-3})$
$M = 6.78\ (10^4)$ N-m (FL)
$\upsilon = 0.3\ (L^0)$
$\theta = 5.23\ (10^{-2})$ rad (L^0)
$G = 25.84$ GPa $(ML^{-1}T^{-2})$
$\varepsilon = 0.06\%\ (L^0)$
$\sigma = 41.37$ MPa $(ML^{-1}T^{-2})$
$t = 37.78$°C (°C)
$T = ML^{-1}T^{-2}$
$V = 1.64\ (10^{-4})\ m^3(L^3)$
$W = 4.448\ (10^3)$ N (MLT^{-2})
$\rho_W = 7.7\ (10^4)\ N/m^3\ (ML^{-2}T^{-2})$
$\sigma_0 = 137.9$ MPa $(ML^{-1}T^{-2})$
$E = 68.95$ GPa $(ML^{-1}T^{-2})$

1-2 mass = 42.69 kg, weight = 420 N

1-3 mass = 60.60 slug = 884.15 kg
weight = 1949.5 lbf = 8670 N
$P_x = 225$ lbf = 1 kN
$P_y = 2250$ lbf = 10 kN

1-4 $\beta_{\text{axial}} = 0.5\ (10^{-2})$ m
$\beta_{\text{beam}} = 8.725\ (10^{-2})$ rad
$\beta_{\text{shaft}} = 3.49\ (10^{-2})$ rad

1-5 $\rho_{\text{m}} = 7849\ \text{kg/m}^3 = 15.2\ \text{slug/ft}^3$
$\rho_{\text{w}} = 77\ \text{kN/m}^3 = 490\ \text{lbf/ft}^3$

1-6 $\beta_{\text{thermal}} = 4\ (10^{-4})$ m = 1.57 (10^{-2}) in.

1-7 $\theta = 0^\circ$, $R_x = \infty$, $R_y = P/2$
$\theta = 30^\circ$, $R_x = P$, $R_y = P/2$
$\theta = 60^\circ$, $R_x = 0.57P$, $R_y = P/2$
$\theta = 90^\circ$, $R_x = 0$, $R_y = P/2$

1-8 $\varepsilon_x = -(10^{-4})$, $\varepsilon_y = 0.3\ (10^{-4})$

1-9 $\varepsilon_x = -4.5\ (10^{-6})$, $\varepsilon_y = 2.5\ (10^{-6})$
$\gamma = 15\ (10^{-6})$

1-10 $\sigma_G = -277.8$ psi = −1.92 MPa
$\sigma_B = -416.7$ psi = −2.87 MPa
$\sigma_C = -833.3$ psi = −5.75 MPa

1-11 $P_{\text{break}} = 13$ kip (57.6 kN)

1-12 $E = 96\ (10^6)$ psi = 662 GPa

Chapter 2

2-1 $F_a = F_s = 4448$ N
$\sigma_a = \sigma_s = 6.895$ MPa
$R_a = R_s = 448$ N
$\delta_a = 4.57\ (10^{-4})$ m, $\delta_s = 1.52\ (10^{-4})$ m
$\beta_a = 4.57\ (10^{-4})$ m, $\beta_s = 1.52\ (10^{-4})$ m
$\varepsilon_a = (10^{-4})$, $\varepsilon_s = 0.33\ (10^{-4})$

2-2 $F_{\text{G-alu}} = -2.21$ kip, $F_{\text{G-ste}} = -2.53$ kip
$F_{\text{G-con}} = -186.23$ kip
$\delta_{\text{max-mech}} = -1.175\ (10^{-3})$ in.
$\delta_{\text{max-therm}} = 19.81\ (10^{-2})$ in.

2-3 $\delta_{\text{mech}} = -2.7\ (10^{-2})$ in.
$\delta_{\text{therm}} = -2.6\ (10^{-1})$ in.

2-4 $R_1 = 1.49$ kip, $R_2 = 0.74$ kip
$\delta_a = -7.76\ (10^{-2})$ in.
$\theta = 3.23\ (10^{-3})$

2-5 $R = P\ (\text{Sin}\ \theta + \text{Cos}\ \theta)$
$R_{\text{max, min}} = \sqrt{2}P,\ -\sqrt{2}P$
$\theta_{\text{max, min}} = 45^\circ,\ 225^\circ$

2-6 $F_1 = -1$ kip, $F_2 = \sqrt{2}$ kip
$X_1 = 1.53\ (10^{-3})$ in.
$X_2 = -2.06\ (10^{-4})$ in.

2-7 See Solution Manual for Graphics.

2-8 See Solution manual for Graphics.

2-9 Mechanical Load:
$F_1 = F_2 = 3333.33\,\text{N}$,
$F_3 = F_7 = F_8 = F_{10} = F_{12} = 0$,
$F_4 = -1666.7\,\text{N}$, $F_5 = F_6 = -666.7\,\text{N}$,
$F_9 = -3299.8\,\text{N}$, $F_{11} = -2357.0\,\text{N}$,
$F_{13} = 2357.0\,\text{N}$.
$X_{8\text{-u}} = X_{7\text{-u}} = 0.179\ (10^{-3})$ m,
$X_{6\text{-v}} = -0.292\ (10^{-3})$ m,
$X_{5\text{-v}} = -0.191\ (10^{-3})$ m

Thermal Load:
$F_{\text{i}} = 0$, $(i = 1, 2, \ldots, 13)$
$X_{2\text{-u}} = 3.6\ (10^{-3})$ m, $X_{4\text{-u}} = 10.8\ (10^{-3})$ m,
$X_{5\text{-u}} = X_{6\text{-u}} = X_{7\text{-u}} = X_{8\text{-u}} = 4.8\ (10^{-3})$ m
$X_{2\text{-v}} = X_{7\text{-v}} = 4.8\ (10^{-3})$ m,
$X_{3\text{-v}} = X_{6\text{-v}} = 2.4\ (10^{-3})$ m

Support Settling:
$F_{\text{i}} = 0$, $(i = 1, 2, \ldots, 13)$
$X_{1\text{-u}} = X_{4\text{-u}} = 12.0\ (10^{-3})$ m,
$X_{5\text{-u}} = X_{8\text{-u}} = 20.3\ (10^{-3})$ m
$X_{2\text{-v}} = X_{7\text{-v}} = -8.3\ (10^{-3})$ m,
$X_{4\text{-v}} = X_{5\text{-v}} = -25.0\ (10^{-3})$ m,

2-10 $R_{1\text{u}} = 0$, $R_{1\text{v}} = 1000\,\text{N}$
$R_{4\text{v}} = 1000\,\text{N}$
$\sigma_{89} = \sigma_{510} = 867\,\text{kPa}$
$\sigma_{79} = \sigma_{610} = -388\,\text{kPa}$

2-11 $F_{25} = 25{,}754\,\text{N}$
$\sigma_{25} = 3.13\,\text{MPa}$

2-12 (1) $\sigma_s = 709.8\,\text{psi}$, $\sigma_a = 2368.4\,\text{psi}$
$u = 1.4 \times 10^{-3}$ in.
(2) $\varepsilon_s = 8.05 \times 10^{-4}$, $\varepsilon_a = 2.86 \times 10^{-4}$
(3) $\varepsilon_s = \varepsilon_a = 1.69 \times 10^{-2}$
$\sigma_s = 50.7 \times 10^{-4}\,\text{psi}$, $\sigma_a = 16.9 \times 10^{4}\,\text{psi}$

Chapter 3

3-1(a) Span: $(0 \le x \le a)$
$M(x) = -(3/2)pa^2 + pax$
$V(x) = -pa$
Span: $(a \le x \le 2a)$
$M(x) = -(1/2)px^2 + 2pax - 2pa^2$
$V(x) = px - 2pa$
Span: $(2a \le x \le 3a)$
$M(x) = 0$
$V(x) = 0$

3-1(b) Span: $(0 \le x \le 2\text{m})$
$M(x) = 4x - 9.5$
$V(x) = -4$
Span: $(2\,\text{m} \le x \le 3\,\text{m})$
$M(x) = x - 3.5$
$V(x) = -1$
Span: $(3\,\text{m} \le x \le 4\,\text{m})$
$M(x) = -(1/2)x^2 + 4x - 8$
$V(x) = x - 4$

3-1(c) $M(x) = (10/3)x^3 - 300x^2 + 6000x$
$V(x) = -10x^2 + 600x - 6000$

3-1(d) Span: $(0 \le x \le 2.5\,\text{m})$
$M(x) = -50$
$V(x) = 0$

3-1(e) Span: $(0 \le x \le L/4)$
$M(x) = Px$
$V(x) = -P$
Span: $(L/4 \le x \le 3L/4)$
$M(x) = PL/4$
$V(x) = 0$
Span: $(3L/4 \le x \le 3L)$
$M(x) = P(L - x)$
$V(x) = P$

3-1(f) Span: $(5 \le x \le 10\,\text{ft})$
$M(x) = (2/3)x - 5$
$V(x) = -2/3$
Span: $(10 \le x \le 15\,\text{ft})$
$M(x) = 5 - x/3$
$V(x) = 1/3$

3-1(g) Span: $(0 \le x \le 8\,\text{m})$
$M(x) = (4/5)\,x$
$V(x) = -4/5$
Span: $(8 \le x \le 10\,\text{m})$

$M(x) = -2x^2 + (164/5)x - 128$
$V(x) = 4x - 164/5$

3-1(h) Span: $(0 \le x \le 10\,\text{ft})$
$M(x) = -(1/15)x^3 - (1/2)x^2 + (35/3)x$
$V(x) = (1/5)x^2 + x - 35/3$
Span: $(10 \le x \le 20\,\text{ft})$
$M(x) = -(1/15)x^3 + (9/2)x^2 - (265/3)x + 500$
$V(x) = (1/5)x^2 - 9x + (265/3)$

3-1(i) Span: $(0 \le x \le 10\,\text{ft})$
$M(x) = 400x$
$V(x) = -400$
Span: $(10 \le x \le 30\,\text{ft})$
$M(x) = -20x^2 + 800x - 2000$
$V(x) = 40x - 800$
Span: $(30 \le x \le 40\,\text{ft})$
$M(x) = 16000 - 400x$
$V(x) = 400$

3-1(j) Span: $(0 \le x \le 6\,\text{m})$
$M(x) = (M_0/6)x$
$V(x) = -(M_0/6)$
Span: $(6 \le x \le 10\,\text{m})$
$M(x) = M_0$
$V(x) = 0$

3-1(k) Span: $(0 \le x \le 2\,\text{m})$
$M(x) = M_0$
$V(x) = 0$
Span: $(2\,\text{m} \le x \le 8\,\text{m})$
$M(x) = -Px/3 - (M_0/6)x + 2P/3 + 4M_0/3$
$V(x) = P/3 + M_0/6$
Span: $(8\,\text{m} \le x \le 10\,\text{m})$
$M(x) = Px - 10P$
$V(x) = -P$

3-1(l) Span: $(0 \le x \le 2\,\text{m})$
$M(x) = 0$
$V(x) = 0$
Span: $(2\,\text{m} \le x \le 5\,\text{m})$
$M(x) = 25(2 - x)/3$
$V(x) = 25/3$
Span: $(5\,\text{m} \le x \le 8\,\text{m})$
$M(x) = 170/3 - 25x/3$
$V(x) = 25/3$
Span: $(8\,\text{m} \le x \le 10\,\text{m})$
$M(x) = -5x^2/2 + 50x - 250$
$V(x) = 5x - 50$

3-2 (3-1c):

$M(x) = 10x^3/3 - 300x^2 + 6000x$

$V(x) = -\dfrac{\partial M}{\partial x} = -10x^2 + 600x - 6000$

3-2 (3-1f):

Range: (0−5 ft)

$M(x) = -x/3$

$V(x) = -\dfrac{\partial M}{\partial x} = 1/3$

Range: (5−10 ft)

$M(x) = 2x/3 - 5$

$V(x) = -\dfrac{\partial M}{\partial x} = -2/3$

Range: (10−15 ft)

$M(x) = -x/3 + 5$

$V(x) = -\dfrac{\partial M}{\partial x} = 1/3$

3-2 (3-1l):

Range: (0−2 m)

$M(x) = 0$

$V(x) = -\dfrac{\partial M}{\partial x} = 0$

Range: (2−5 m)

$M(x) = 25(2 - x)/3$

$V(x) = -\dfrac{\partial M}{\partial x} = 25/3$

Range: (5−8 m)

$M(x) = 170/3 - 25x/3$

$V(x) = -\dfrac{\partial M}{\partial x} = 25/3$

Range: (8−10 m)

$M(x) = -5x^2/2 + 50x - 250$

$V(x) = -\dfrac{\partial M}{\partial x} = 5x - 50$

3-2 (3-1a):

Range: AB

$M(x) = pax + c_1$

$c_1 = -3/2pa^2$

Range: BC

$M(x) = -px^2/2 + 2pax + c_2$

$c_2 = -2pa^2$

Range: CD

$M(x) = c_3 = 0$

3-3 (3-1k):

Range: (0−2 m)

$M(x) = c_1 = M_0$

Range: (2−8 m)

$M(x) = -px/3 - M_0x/6 + c_2$

$c_2 = (4/3)M_0 + 2p/3$

Range: $(8-10\,\text{m})$
$M(x) = px + c_3$
$c_3 = -10p$

3-4 (#1-f)(a)
$\sigma = 492\,\text{psi}$
$\varepsilon = 16.4\ (10^{-6})$
$\tau = 16.1\,\text{psi}$
$\gamma = 1.4\ (10^{-6})$

3-4 (#1-f)(b)
$\sigma = 942\,\text{psi}$
$\varepsilon = 94.2\ (10^{-6})$
$\tau = 5.4\,\text{psi}$
$\gamma = 1.4\ (10^{-6})$

3-5 (#3-1a)
Region: $(0 - a)$

$$\nu = \frac{pax^2}{12EI}(2x - 9a)$$

Region: $(a - 2a)$

$$\nu = -\frac{pax^2}{24EI}(x^4 - 8ax^3 + 24a^2x^2 - 4a^3x + a^4)$$

Region: $(2a - 3a)$

$$\nu = \frac{p}{EI}\left(\frac{5}{8}a^4 - \frac{7}{6}a^3x\right)$$

3-5 (#3-1c)

$$\nu = \frac{1}{EI}\left(\frac{x^5 - 150x^4 + 6000x^3}{6} - 36000x\right)$$

3-5 (#3-1g)
Region: $(0 - 8\,\text{m})$

$$\nu = \frac{2}{15EI}(x^3 - 13.1)$$

Region: $(8 - 10\,\text{m})$

$$\nu = -\frac{30}{EI}(5x^4 - 164x^3 + 1920x^2) + \frac{4924}{15EI}x - \frac{2048}{3EI}$$

Region: $(2a - 3a)$

$$\nu = \frac{p}{EI}\left(\frac{5}{8}a^4 - \frac{7}{6}a^3x\right)$$

3-6 $\nu = 750\alpha x - \frac{25}{8}\alpha x^2$

3-7 Region $(0 - 240\,\text{in.})$: $\nu = 0$.
Region $(240 - 360\,\text{in})$:
Origin at second support, $0 \le x \le 120$

$$\nu = -\frac{25}{8}\alpha x$$

3-8 $\nu = -\frac{1}{120}x$

3-9 I-section:
(a) $\bar{y} = 5.27$ in.
$\tau_{\text{centroid}} = 0.49$
$q_{\text{centroid}} = 0.098$
(b) Shear center coincides with centroid

Inverted T-section:
(a) $\bar{y} = 7.39$ in.
$\tau_{\text{centroid}} = 0.067$
$q_{\text{centroid}} = 0.067$
(b) Shear center coincides with centroid

T-section:
(a) $\bar{y} = 6.4$ in.
$\tau_{\text{centroid}} = 0.48$
$q_{\text{centroid}} = 0.18$
(b) Shear center coincides with centroid

Channel section
(a) $\tau_{\max} = 0.5625$
$q_{\max} = 0.5625$
(b) $e = 3.75$

3-10 I-section: $R_s = 698.5$ lbf per screw
Box-section: $R_s = 1397$ lbf

3-11 Aluminum-wood beam
$\varepsilon_{\text{al}} = \varepsilon_{\text{wood}} = 3x10^{-5}$
$\sigma_{\text{al}} = 2.19$ MPa
$\sigma_{\text{wood}} = -0.389$ MPa

Reinforced concrete
$\varepsilon_{\text{conc-top}} = -12\ (10^{-3})$
$\sigma_{\text{conc-top}} = -2.76$ MPa
$\varepsilon_{\text{steel}} = 25.32\ (10^{-3})$
$\sigma_{\text{conc-top}} = -2.76$ MPa
$\sigma_{\text{steel}} = 50.64$ MPa

3-12 (a) LHS = RHS = $ML^{-1}T^{-2}$
(b) LHS = RHS = $ML^{-1}T^{-2}$
(c) LHS = RHS = MT^{-2}
(d) LHS = RHS = MLT^{-2}
(e)-1 LHS = RHS = L^{-3}
(e)-2 LHS = RHS = L^{-2}
(e)-3 LHS = RHS = L^{-1}
(f) LHS = RHS = $ML^{-1}T^{-2}$

(g) $\text{LHS} = \text{RHS} = \text{ML}^{-1}\text{T}^{-2}$

(*h*) $(M_R = P\ell)$: ML^2T^{-2}

$\left(R = \dfrac{Pa}{\ell}\right)$: MLT^{-2}

3-13

(a) T	(m) F	(y) F
(b) F	(n) T	(z) T
(c) T	(o) F	(aa) F
(d) F	(p) T	(bb) T
(e) F	(q) F	(cc) F
(f) F	(r) F	(dd) F
(g) F	(s) F	(ee) F
(h) F	(t) F	(ff) F
(i) T	(u) T	(gg) F
(j) F	(v) T	(hh) T
(k) F	(w) F	(ii) F
(l) F	(x) T	

Chapter 4

4-1 $\left(\tau = \dfrac{Tr}{J}\right)$: $\text{RHS} = \text{LHS} = FL^{-2}$

$\left(\varepsilon = \dfrac{Tr}{JG}\right)$: $\text{RHS} = \text{LHS} = \text{L}^0$

$\left(\varphi = \dfrac{TL}{JG}\right)$: $\text{RHS} = \text{LHS} = \text{L}^0$

4-2 $T = -800\,\text{N.m}$

$\tau = -1.86\,\text{MPa}$

$\gamma = -6.63\ (10^{-3})$

$\varphi = -2.9\ (10^{-3})$

4-3 Aluminum−shaft

$T = 15\,\text{kN.m}$

$\tau_{\text{max}} = 27.84\,\text{Mpa}$

$\varphi_{\text{max}} = 0.066\,\text{rad}$

Steel−shaft

$T = 15\,\text{kN.m}$

$\tau_{\text{max-third-shaft}} = 57.37\,\text{Mpa}$

$\varphi_{\text{max-free end}} = 0.166\,\text{rad}$

4-4 shaft−*AB*

$T = -2.1$ in.-k

$\tau = -167.18$ psi

$\Delta\varphi = -0.434\ (10^{-3})$ rad

shaft−*BC*

$T = -3.15$ in.-k

$\tau = -250$ psi
$\Delta\varphi = -0.32\ (10^{-3})$ rad
$\varphi_D = -0.76\ (10^{-3})$ rad

4-5 Unmated−shafts
$T = 1.45\ (10^6)$ in.-lbf
$\tau_1 = \tau_2 = 14{,}423$ psi
$\Delta\varphi_1 = \Delta\varphi_2 = 0.0188$ rad
Mated−shafts
$T_1 = 269.94$ in.-k
$T_2 = 134.97$ in.-k
$\tau_{\text{shaft}-1} = 2.685$ ksi
$\tau_{\text{shaft}-2} = 1.342$ ksi

Chapter 5

5-1 Beam *BC*:
$M_{\max} = 5000$ N.m
$V_{\max} = 10{,}000$ N
$\sigma_{\max} = 2.2$ MPa
$\tau_{\max} = 0.33$ MPa
$\varepsilon_{\max} = 1.1\ (10^{-5})$
$\gamma_{\max} = 4.3\ (10^{-6})$
Beam *AB* or *DC*
$M_{\max} = -10{,}000$ N.m
$V_{\max} = 5000$ N
$\sigma_{\max} = -4.4$ MPa
$\tau_{\max} = 0.167$ MPa
$\varepsilon_{\max} = -2.2\ (10^{-5})$
$\gamma_{\max} = 2.16\ (10^{-6})$

5-2 Bar Forces:
$F_{BD} = 0$
$F_{CD} = 1000$ lbf
$F_{BC} = -2236$ lbf
$F_{AC} = 2000$ lbf
Beam Analysis:
$R_{\text{trans}} = 0$
$R_{\text{axial}} = 1000$ lbf
$M_R = 96{,}000$ in.-lbf
$\tau_{\max} = 424.8$ psi
$\sigma_{\text{min, max}} = (-5570.5,\ 5303.8)$ psi

5-3 Beam *CD*:
$M_C = -2000$ N.m
$V_C = -2000$ lbf
$\tau = 1.19$ MPa
$\sigma = (\pm 17.4)$ MPa

Beam CB:
$M_B = -2000\,\text{N.m}$
$V = 0$
$F = -2000\,\text{lbf}$
$\sigma = (-0.526 \mp 8.7)\,\text{MPa}$
$\tau = 1.19\,\text{MPa}$
Member BA (x-axis from B to A)
$M(x) = -74.07\ (3 - x)^3$
$V(x) = 222\ (3 - x)^2$

5-4 Forces at C
$F_x = 0$
$V_y = 0$
$V_z = 64.34\,\text{lbf}$
$M_x = -4686.95\,\text{in.-lbf}$ (torque)
$M_y = -4632.48\,\text{in.-lbf}$
$M_z = 0$

Chapter 6

6-1

Truss	*(1)* *#F; #X; #R*	*(2)* *#EE, CC*	*(3)* *#I-I; #E-I*
(a)	10, 9, 3	9, 1	1, 0
(b)	11, 8, 4	8, 3	2, 1
(c)	14, 10, 6	10, 4	1, 3
(d)	16, 14, 4	14, 2	1, 1
(e)	15, 8, 10	8, 7	7, 7
(f)	7, 5, 5	5, 2	0, 2

6-2

Statement		
(1)	-a	True
	-b	False
	-c	False
	-d	False
(2)	-a	False
	-b	False
	-c	True
	-d	False
(3)	-a	True
	-b	False
	-c	False
	-d	False

(*continued*)

Statement	
(4) -a	True
-b	False
-c	False
(5) -a	False
-b	False
-c	True
(6)	True
(7)	True
(8) -a	True
-b	False
-c	False
(9) -a	False
-b	False
-c	False
-d	False

6-3 Identical response is obtained by IFM, IFMD and the stiffness method.

Response Variables	*Load Case (a)*	*Load Case (b)*	*Load Case (c)*
F_{12}	2345 N	61486	0
F_{23}	−6140	61486	0
F_{34}	1638	61486	0
F_{41}	1638	61486	0
F_{13}	−2816	−86955	0
F_{24}	2684	−86955	0
R_{1v}	−500	0	0
R_{3u}	−6000	0	0
R_{3v}	5500	0	0
X_{1u}	0.18 mm	−2.0	−12.7
X_{2u}	0.23	−1.0	−12.7
X_{2v}	0.03	1.0	0
X_{4u}	0.09	−1.0	−12.7
X_{4v}	−0.14	−1.0	0

6-4 Identical response is obtained by IFM, and the stiffness method.

Response Variables	*Load Case 1*	*Load Case 2*	*Load Case 3*
F_{upper}	14,000 lbf	−15,840	−47,520
F_{middle}	4000	−15,840	−47,520
F_{lower}	16,000	−15,840	−47,520
$R_{lower\text{-}u}$	16,000	15,840	47,520
$R_{upper\text{-}u}$	14,000	−15,840	−47,520
$X_{lowernode\text{-}u}$	−63	−62	−31
$X_{uppernode\text{-}u}$ (in 10^{-3} in.)	−55	62	31

6-5 Identical response is obtained by IFM, and the stiffness method.

Response Variables	*Load Case 1*	*Load Case 2*	*Load Case 3*
F_{41}	2036 lbf	−8637	79,270
F_{42}	−2036	−8637	79,270
F_{43}	0	−14,398	132,143
$R_{1\text{-u}}$	−1125	4772	−43,800
$R_{1\text{-v}}$	−1697	7199	−66,071
$R_{4\text{-u}}$	−1125	−4772	43,800
$X_{4\text{-u}}$	7.07	0	0
$X_{4\text{-v}}$ (in 10^{-3} in.)	0	5.4	182.6

6-6 Identical response is obtained by IFM, and the stiffness method.

Response Variables	*Load Case 1*	*Load Case 2*	*Load Case 3*	*Load Case 4*
Non-zero forces in lbf				
F_{17}	−5000	0	0	
F_{23}	0	1000	0	
F_{56}	0	0	−26,400	−13,200
F_{57}	0	0	26,400	13,200
F_{67}			26,400	13,200
$R_{1\text{-u}}$	0	0	0	0
$R_{1\text{-v}}$	5000	0	0	0
$R_{7\text{-u}}$	0	0	0	0
$R_{7\text{-v}}$	0	0	0	0
$X_{2\text{-u}}$	1.73	0.12	45.72	9.15
$X_{2\text{-v}}$	−3.0	−0.2	−15.84	−15.84
$X_{3\text{-u}}$	0.57	0.12	45.72	9.15
$X_{3\text{-v}}$	−3.0	0.2	15.84	−15.84
$X_{4\text{-v}}$	−4.0	0	0	−31.68
$X_{5\text{-u}}$	0.57	0.12	−3.05	12.19
$X_{5\text{-v}}$	−5.0	−0.2	−58.07	−52.79
$X_{6\text{-u}}$	1.73	0.12	57.92	15.24
$X_{6\text{-v}}$	−3.0	−0.2	−36.95	26.40
$X_{7\text{-u}}$	1.15	0.23	54.87	27.44
$X_{7\text{-v}}$ (10^{-3} in.)	−4.0	0	0	−15.84

Chapter 7

7-1

Prob	*Force & Defor*	*Disp & EE*	*Reac*	*CC*	*IR*	*ER*
(a)	4	3	3	1	0	1
(b)	8	7	3	1	0	1
(c)	4	1	5	3	0	3
(d)	6	4	4	2	0	2
(e)	8	6	4	2	0	2
(f)	4	3	3	1	0	1
(g)	12: (2-hinges)	10	6	0	0	0
(h)	12: (2-hinges)	10	4	0	0	0

7-2

Response Variables	*Load case 1*	*LC2*	*LC3*	*LC4*
M_1	0	0	0	0
M_2	1539	3.69	11.5	15.2
M_3	−3461	3.69	11.5	15.2
M_4	0	0	0	0
(lbf)		(10^5)	(10^5)	
θ_1	−0.6	−144	−450	−595
θ_2	1.2	289	900	1190
θ_3	−0.06	481	1100	−620
$(10^{-5}$ rad)				
R_1	13	3077	9600	12.7
R_2	16	−6154	−19200	−25.4
R_3	−29	3077	9600	12.7
(lbf)				(10^3)

7-3 Change solution to P7-2 into SI unit.

7-4

$$\begin{Bmatrix} M_1 \\ M_2 \\ M_3 \\ M_4 \\ M_5 \\ M_6 \end{Bmatrix} = \begin{Bmatrix} -38.4 \\ 7.8 \\ 7.8 \\ 0 \\ 0 \\ -15.6 \end{Bmatrix}; \begin{Bmatrix} \nu_{\text{load}} \\ \theta_{\text{load}} \\ \nu_{\text{hinge}} \\ \theta_{\text{hinge}}^{\text{left}} \\ \theta_{\text{hinge}}^{\text{right}} \end{Bmatrix} = \begin{Bmatrix} -8.5\ (10^{-3})\,\text{in.} \\ -2.2\ (10^{-4})\,\text{rad} \\ -0.17\ (10^{-3})\,\text{in.} \\ -1.6\ (10^{-4})\,\text{rad} \\ 2.6\ (10^{-4})\,\text{rad} \end{Bmatrix}; \begin{Bmatrix} R_{\text{n1}} = 844\,\text{lbf} \\ R_{\text{n4}} = 156\,\text{lbf} \\ R_{\text{Mn1}} = 34.4\,\text{in.-k} \\ R_{\text{Mn1}} = -15.6\,\text{in.-k} \end{Bmatrix}$$

7-5

$$\begin{Bmatrix} M_1 \\ M_2 \\ M_3 \\ M_4 \end{Bmatrix} = \begin{Bmatrix} \dfrac{-17\ell^2 q_0}{480} \\ \dfrac{23\ell^2 q_0}{960} \\ \dfrac{23\ell^2 q_0}{960} \\ 0 \end{Bmatrix}; \begin{Bmatrix} \nu_2 \\ \theta_2 \\ \theta_3 \end{Bmatrix} = \frac{q_0}{EI} \begin{Bmatrix} \dfrac{-\ell^4}{512} \\ \dfrac{-11\ell^3}{3840} \\ \dfrac{\ell^3}{120} \end{Bmatrix} \qquad \begin{Bmatrix} R_1 \\ M_{R1} \\ R_4 \end{Bmatrix} = q_0\ell \begin{Bmatrix} \dfrac{19}{160} \\ \dfrac{17\ell}{480} \\ \dfrac{63}{480} \end{Bmatrix}$$

7-6 $$\begin{Bmatrix} R_{\text{node1}} \\ M_{\text{Rnode1}} \\ R_{\text{node2}} \end{Bmatrix} = \begin{Bmatrix} 31.25\,\text{kN} \\ 25\,\text{kN.m} \\ 118.75\,\text{kN} \end{Bmatrix}^{(1)}; \begin{Bmatrix} 2.2\,\text{kN} \\ 8.6\,\text{kN.m} \\ -2.2\,\text{kN} \end{Bmatrix}^{(2)}$$

7-7 Solution for $\ell = 6\,\text{m}$, $d = 0.3\,\text{m}$, $t = 0.15\,\text{m}$, $E = 200\,\text{GPA}$, $\bar{\Delta} = 0.01\,\text{m}$, $\bar{\theta} = 0.00873\,\text{rad}$.

$$\begin{Bmatrix} R_1 \\ M_{R1} \\ R_2 \\ M_{R2} \end{Bmatrix} = \begin{Bmatrix} -98\,\text{kN} \\ -393\,\text{kN.m} \\ 98\,\text{kN} \\ -196\,\text{kN.m} \end{Bmatrix}^{\bar{\theta}}; \begin{Bmatrix} 37.5\,\text{kN} \\ 113\,\text{kN.m} \\ -37.5\,\text{kN} \\ 113\,\text{kN.m} \end{Bmatrix}^{\bar{\Delta}}$$

7-8 Solution for $\ell = 3\,\text{m}$ and $M_0 = 1\,\text{N.m}$

$$\begin{Bmatrix} R_1 \\ M_{R1} \\ R_2 \\ M_{R2} \end{Bmatrix} = \begin{Bmatrix} 0 \\ 0.33 \\ 0 \\ -0.33 \end{Bmatrix}$$

7-9

$$\begin{Bmatrix} R_{\text{upbm}} \\ M_{\text{Rupbm}} \\ R_{\text{2lwbm}} \\ M_{\text{2lwbm}} \end{Bmatrix} = \begin{Bmatrix} -\dfrac{P}{4} \\ \dfrac{3Pa}{4} \\ \dfrac{5P}{4} \\ \dfrac{5Pa}{4} \end{Bmatrix}$$

7-10 Identical solution is obtained by force and displacement methods.

$$\begin{Bmatrix} M_{\text{1leftbm}} \\ M_{\text{2leftbm}} \\ M_{\text{1rtbm}} \\ M_{\text{2rtbm}} \end{Bmatrix} = \begin{Bmatrix} \dfrac{7\ell^2 q}{48} \\ \dfrac{5\ell^2 q}{96} \\ \dfrac{5\ell^2 q}{96} \\ 0 \end{Bmatrix}; \begin{Bmatrix} \nu^{\text{center}} \\ \theta^{\text{center}} \\ \theta^{\text{rt sup}} \end{Bmatrix} = \frac{q\ell^3}{768\,\text{EI}} \begin{Bmatrix} \frac{-17\ell}{6} \\ -5 \\ 13 \end{Bmatrix}$$

Chapter 8

8-1

Prob	*Force & Defor*	*Disp & EE*	*Reac*	*CC*	*IR*	*ER*
(a)	2	1	2	1	0	1
(b)	3	2	2	1	0	1
(c)	3	1	3	2	0	2
(d)	8	5	4	3	0	3

8-2 Solution for $\ell = 4\,\text{m}$, $T^0 = 10\,\text{N.m}$, $G = 28\,\text{GPa}$, $J = 4\ (10^{-5})\ \text{m}^4$.

$$\begin{Bmatrix} T_1 \\ T_2 \end{Bmatrix} = \begin{Bmatrix} 4.0 \\ -6.0 \end{Bmatrix}\text{N.m}; \begin{Bmatrix} \text{T}_{R1} \\ \text{T}_{R2} \end{Bmatrix} = \begin{Bmatrix} -4.0 \\ -6.0 \end{Bmatrix}\text{N.m}$$

$\varphi_B = 1.4\ (10^{-5})$ rad

8-3 $$\begin{Bmatrix} T_1 \\ T_2 \end{Bmatrix}_{\text{kN}} = \begin{Bmatrix} 1.96 \\ -1.04 \end{Bmatrix}^{LCI}; \begin{Bmatrix} 22.54 \\ 22.54 \end{Bmatrix}^{LC2}; \begin{Bmatrix} 24.5 \\ 21.5 \end{Bmatrix}^{LC3}$$

$$\begin{Bmatrix} T_{R1} \\ T_{R3} \end{Bmatrix}_{\text{kN}} = \begin{Bmatrix} -1.96 \\ -1.04 \end{Bmatrix}^{LC1}; \begin{Bmatrix} -22.54 \\ 22.54 \end{Bmatrix}^{LC2}; \begin{Bmatrix} -24.5 \\ 21.5 \end{Bmatrix}^{LC3}$$

$$\{\varphi_B\}_{\text{rad}} = \{0.035\}^{LC1}; \{0.003\}^{LC2}; \{0.038\}^{LC3}$$

8-4 $$\begin{Bmatrix} R_A \\ R_D \end{Bmatrix} = \begin{Bmatrix} -T_0 \\ -T_0 \end{Bmatrix}^{LC1}; \begin{Bmatrix} -T_0/3 \\ T_0/3 \end{Bmatrix}^{LC2}; \begin{Bmatrix} -1.33T_0 \\ -0.67T_0 \end{Bmatrix}^{LC3}$$

8-5 $$\begin{Bmatrix} R_A \\ R_D \end{Bmatrix}_{\text{N.m}} = \begin{Bmatrix} -870 \\ -130 \end{Bmatrix}^{\text{steel}}; \begin{Bmatrix} -804 \\ -196 \end{Bmatrix}^{\text{aluminum}}$$

8-6 Solution obtained for ($T^0 = 1000$ in.-lbf) and ($\varphi^0 = 0.001$ rad).

$$\begin{Bmatrix} T_1 \\ T_2 \\ T_3 \\ T_4 \\ T_5 \\ T_6 \\ T_7 \\ T_8 \end{Bmatrix}_{\text{in.-k}} = \begin{Bmatrix} 19.7 \\ 18.7 \\ -10.1 \\ -9.1 \\ 9.1 \\ 10.1 \\ -18.7 \\ -19.7 \end{Bmatrix}; \begin{Bmatrix} R_A \\ R_B \\ R_C \\ R_D \\ R_E \end{Bmatrix} = \begin{Bmatrix} -19.7 \\ 28.8 \\ -18.2 \\ 28.8 \\ -19.7 \end{Bmatrix}$$

$$\begin{Bmatrix} \varphi_A \\ \varphi_m \\ \varphi_B \\ \varphi_m \\ \varphi_C \\ \varphi_m \\ \varphi_D \\ \varphi_m \\ \varphi_E \end{Bmatrix} = (10^{-3})\ \text{rad} \begin{Bmatrix} -1.000 \\ 0.026 \\ 1.000 \\ 0.474 \\ 0.000 \\ 0.474 \\ 1.000 \\ 0.026 \\ -1.000 \end{Bmatrix}$$

Chapter 9

9-1

Prob	*Force & Defor*	*Disp & EE*	*Reac*	*CC*	*IR*	*ER*
1.	6	5	4	1	0	1
2.	6	5 ($M_B = 0$)	4	0	0	0
3.	4	3	5	1	1	0
4.	9	6	6	3	3	0

9-2 $$\begin{Bmatrix} F_1 \\ F_2 \\ F_3 \\ F_4 \\ F_5 \\ F_6 \\ F_7 \\ F_8 \\ F_9 \end{Bmatrix} = \begin{Bmatrix} 0 \\ 1000 \\ 1500 \\ 0 \\ 1000 \\ -1500 \\ -2000 \\ 0 \\ 0 \end{Bmatrix}^{LC1} ; \begin{Bmatrix} 1500 \\ 2250 \\ -4500 \\ -1500 \\ 2250 \\ -2250 \\ 0 \\ -3000 \\ 0 \end{Bmatrix}^{LC2} ; \begin{Bmatrix} 0 \\ -500 \\ 1000 \\ 0 \\ -500 \\ 500 \\ 0 \\ 0 \\ 2000 \end{Bmatrix}^{LC3}$$

$$\left\{ v_{\text{column}}^{\text{top}} = -1.5\,\text{mm} \right\}^{LC1}$$

$$\left\{ u_{\text{column}}^{\text{top}} = 1.4\,\text{mm} \right\}^{LC2}$$

$$\left\{ \theta_{\text{column}}^{\text{top}} = 0.05\ (10^{-3}\,\text{rad} \right\}^{LC3}$$

9-3 $$\begin{Bmatrix} T_1 \\ T_2 \end{Bmatrix}_{\text{in.-k}}^{\text{hor-memb}} = \begin{Bmatrix} -24 \\ 24 \end{Bmatrix}; \ \varphi_{\text{center}} = -1.9\ (10^{-3})\,\text{rad}$$

9-4 Solution for area $A = 0.125 \times 10^{-3}\,\text{m}^2$ and inertia $I = 264.4 \times 10^{-9}\,\text{m}^4$.

$$\begin{Bmatrix} \theta_A \\ R_{Au} \\ R_{Av} \\ \theta_C \\ R_{Cu} \\ R_{Cv} \end{Bmatrix} = \begin{Bmatrix} -0.07 \times 10^{-3} \\ -0.18\,\text{N} \\ -0.18\,\text{N} \\ 0.014 \times 10^{-3} \\ -4999.82\,\text{N} \\ 0.18\,\text{N} \end{Bmatrix}^{CL1} ; \begin{Bmatrix} -4.2 \times 10^{-3} \\ -10.72\,\text{N} \\ -10.72\,\text{N} \\ 0.83 \times 10^{-3} \\ 10.72\,\text{N} \\ 10.72\,\text{N} \end{Bmatrix}^{LC2}$$

9-5 $$\begin{Bmatrix} R_{Cu} \\ R_{Cv} \end{Bmatrix}_{\text{lbf}} = \begin{Bmatrix} 144 \\ -144 \end{Bmatrix}^{LC1} ; \begin{Bmatrix} 1461 \\ -1461 \end{Bmatrix}^{LC2}$$

$$\text{Bar}_{\text{force}}^{LC1} = -203\ \text{lbf}; \ \ \text{bar}_{\text{force}}^{LC2} = 2066\ \text{lbf}$$

9-6 $$\begin{Bmatrix} R_{Ev} \\ R_{Dv} \end{Bmatrix}_{\text{kip}} = \begin{Bmatrix} 62.2 \\ -62.2 \end{Bmatrix}$$

Chapter 10

10-1 See solution manual for graphics.

10-2

Prob	σ_1	σ_2	τ_{max}	θ_1	θ_2
10-2-1	6405	−1405	3905	25	−65
10-2-2	6405	−1405	3905	25	−65
10-2-3	2000	−2000	2000	−45	45
10-2-4	7071	−7071	7071	68	−22
10-2-5	6562	2438	2062	−38	52
10-2-6	24	−34	29	15	−75
10-2-7	34	−24	29	−75	15
10-2-8	10	2	4	52	−38
10-2-9	6.6	−0.6	3.6	73	−17
10-2-10	19	−11	15	49	−41

10-3 Solution for ($\theta = \pi/3$)

Problem	σ'_1	σ'_2	τ'
10-3-1	5330	−1330	−4232
10-3-2	−2286	−10,714	−701
10-3-3	8.3	36.7	5.3
10-3-4	15.4	3.6	−1.7

10-4 Solution is given for two stress states.

Problem	I_1	I_2
10-3-2	−13000	24 (10^6)
10-3-3	45	275

10-5 Solution is given for (y = h/3).
$\sigma_x = 2000$ psi, $\sigma_y = 0$, $\tau = -139$ psi
$\sigma_1 = 2010$, $\sigma_2 = -10$, $\tau_{max} = 1010$
$\theta_1 = -4°$, $\theta_2 = 86°$

10-6 Spherical steel tank.
$\sigma_x = 90{,}000$ psi, $\sigma_y = \sigma_x$, $\tau = 0$
$\varepsilon_x = \varepsilon_y = 0.0021$, $\delta = 0.0126$ in.
Spherical aluminum vessel.
$\sigma_x = 30$ MPa, $\sigma_y = \sigma_x$, $\tau = 0$
$\varepsilon_x = \varepsilon_y = 0.000288$, $\delta = 0.028$ mm

Cylindrical steel tank in Fig. P10-6(a).
Case 1: water–location A
$\sigma_x = 260$ psi, $\sigma_y = 520$, $\tau = 0$
$\varepsilon_x = 1.04\ (10^{-5})$; $\varepsilon_y = 4.42\ (10^{-5})$, $\delta = 0.00133$ in.
Case 1: Water–location B
$\sigma_x = 260$ psi, $\sigma_y = 520$, $\tau = 0$
$\varepsilon_x = 1.04\ (10^{-5})$; $\varepsilon_y = 4.42\ (10^{-5})$, $\delta = 0.00133$ in.

Cylindrical steel tank in Fig. P10-6(a).
Case 1: alcoholo–location A
$\sigma_x = 204$ psi, $\sigma_y = 408$, $\tau = 0$
$\varepsilon_x = 8.2\ (10^{-6})$; $\varepsilon_y = 3.47\ (10^{-5})$, $\delta = 0.00104$ in.
Case 1: alcohol–location B
$\sigma_x = 102$ psi, $\sigma_y = 204$, $\tau = 0$
$\varepsilon_x = 4.08\ (10^{-6})$; $\varepsilon_y = 1.74\ (10^{-5})$, $\delta = 0.00052$ in.

Cylindrical steel tank in Fig. P10-6(b).
Case 1: Water–location A
$\sigma_x = 1.08$ MPa, $\sigma_y = 2.16$, $\tau = 0$
$\varepsilon_x = 5.9\ (10^{-6})$; $\varepsilon_y = 2.5\ (10^{-5})$, $\delta = 1.8\ (10^{-5})$ m.
Case 1: Water–location B
$\sigma_x = 0.54$ MPa, $\sigma_y = 1.08$, $\tau = 0$
$\varepsilon_x = 3.0\ (10^{-6})$; $\varepsilon_y = 1.3\ (10^{-5})$, $\delta = 0.95\ (10^{-5})$ m.
Case 1: Ether–location A
$\sigma_x = 132$ MPa, $\sigma_y = 2.64$, $\tau = 0$
$\varepsilon_x = 7.2\ (10^{-6})$; $\varepsilon_y = 3.1\ (10^{-5})$, $\delta = 2.3\ (10^{-5})$ m.
Case 1: Ether–location B
$\sigma_x = 0.66$ MPa, $\sigma_y = 1.32$, $\tau = 0$
$\varepsilon_x = 3.6\ (10^{-6})$; $\varepsilon_y = 1.5\ (10^{-5})$, $\delta = 1.15\ (10^{-5})$ m.

Chapter 11

11-1

Problem	*Buckling Load*
11-1a	62.8 (10^6) N
11-1b	128.2 (10^6) N
11-1c	9.8 (10^{14}) N
11-1d	5.0 (10^{14}) N
11-1e	8.5 (10^7) N
11-1f	1.7 (10^8) N
11-1g	1.1 (10^7) N
11-1h	2.6 (10^8) N

11-2

Problem	Buckling Load in lbf		
11-2a	6.8 (10^7)	6.8 (10^7)	92 (10^7)
11-2b	2.0 (10^8)	27.3 (10^8)	
11-2c	0.698 L	0.41 L	
11-2d	4.2 in.		

11-3

Problem	Buckling load in lbf
11-3a (*AB*)	21.5 kip, (f-s = 4.3)
11-3b (*BC*)	441.5 kip, (f-s = 55.2)
11-3c (*CD*)	12.1 kip, (f-s = 2.4)

11-4

Problem	Stress in psi	Displacement in in.
11-4a	265.5	5.15
11-4b	786.1	0.84
11-4c	399.1	3.2
11-4d	260.8	3.2

11-5

Problem	Stress in psi	Displacement in in.
y-axis	16,547	2.5
z-axis	4778	0.28

11-6

Problem	Stress	Displacement
11-6a	428 psi	3.2 in.
11-6b	4.3 MPa	0.022 m

Chapter 12

12-1a

	β^{total}	β^0	β^e	*F in lbf*
Bar1	0.041	0.0	0.041	8650
Bar2	0.058	0.13	−0.072	−7233
Bar3	0.041	0.0	0.041	8650

12-1b
$$\begin{Bmatrix} SED_{bar1} \\ CSED_{bar2} \\ SEDTD_{bar3} \\ CSEDTD_{bar1} \end{Bmatrix} = \begin{Bmatrix} 1.25 \text{ psi} \\ 0.87 \text{ psi} \\ 1.25 \text{ psi} \\ 1.25 \text{ psi} \end{Bmatrix};$$

12-1c $\begin{Bmatrix} \mathrm{SE}_{\mathrm{truss}} \\ \mathrm{CSE}_{\mathrm{truss}} \end{Bmatrix}^{\text{in.-lbf}} = \begin{Bmatrix} 614.3 \\ 561.2 \end{Bmatrix}$

12-1d $W = 144.17$ in.-lbf

12-1e SE = CSE = 614.3 in.-lbf
For mechanical load: SE = CSE = W = 80.1 in.-lbf

12-2 EE are:

$$\begin{bmatrix} 0.71 & 0 & -0.71 \\ -0.71 & -1.0 & -0.71 \end{bmatrix} \begin{Bmatrix} F_1 \\ F_2 \\ F_3 \end{Bmatrix} = \begin{Bmatrix} 0.0 \\ -5000.0 \end{Bmatrix}$$

12-3 Stiffness equations are:

$$(10607) \begin{bmatrix} 20 & 0 \\ 0 & 29.43 \end{bmatrix} \begin{Bmatrix} X_1 \\ X_2 \end{Bmatrix} = \begin{Bmatrix} 0.0 \\ -18{,}000.00 \end{Bmatrix}$$

12-4 $(\pi_{\mathrm{p}})_{\min} = -519$ in.-lbf = −work done.

12-5i $\nu^{\ell-P} = -\dfrac{P\ell^3}{3EI}$; $\nu^{\ell-q} = -\dfrac{q\ell^4}{8EI}$

$\theta^{\ell-P} = -\dfrac{P\ell^2}{2EI}$; $\theta^{\ell-q} = -\dfrac{q\ell^3}{6EI}$

12-5ii $U^p = -\dfrac{P^2\ell^3}{6EI}$; $U^q = -\dfrac{q^2\ell^5}{40EI}$

12-6 See Problem 12-2.

12-7 $\begin{Bmatrix} \beta_1 \\ \beta_2 \end{Bmatrix} = \begin{Bmatrix} -x_1 \\ x_2 \end{Bmatrix}$; $(\beta_1 + \beta_2) = 0$

12-8 $\dfrac{\ell}{AE}(F_1 + F_2) = 0$

12-9 $\delta_P = -\dfrac{P\ell}{2AE}$

12-10 $\ell^4 Pq/(8EI)$

12-11 $-\ell^2/(16EI)$

12-12 $R_B = (5/8)q\ell$, $R_A = R_C = (3/16)q\ell$

Chapter 13

13-1 (a) 31 F; (b) 31 β; (c) 24 X, (d) 8 non-zero P. (e) 4 R; (f) 4 X_{sup}; (g) 7 δR; (h) 24 EE, (24 × 31) [B]; (i) 7, (7 × 31) [C]; (j) (31 × 31) [G], bw = 1; (k) (31 × 31) [S]; (24 × 31) [J]; (l) (24 × 24) [D]; (m) (24 × 24) [K].

13-2 $\{F\}_{\text{lbf}} = \begin{Bmatrix} 1675 \\ 586 \\ 295 \end{Bmatrix}$; $\{X\}_{10^{-3}\text{ in.}} = \begin{Bmatrix} 6.6 \\ -7.3 \end{Bmatrix}$; $\{R\}_{\text{lbf}} = \begin{Bmatrix} -1184,\ 1184 \\ 0,\ 586 \\ 184,\ 238 \end{Bmatrix}$

13-3 True because of rigid body motion. Row and column elements are interchangeable because of symmetry.

13-4 (a) 30 F; (b) 30 β; (c) 19 X, (d) 5 non-zero P. (e) 5 R; (f) 5 X_{sup}; (g) 19 EE, (19×30) [B]; (h) 11, (11×30) [C]; (i) (30×30) [G], bw = 5; (j) (30×30) [S]; (19×30) [J]; (k) (19×19) [D]; (l) (19×19) [K].

13-5

$$\{q\}^{\text{kip}}_{\text{nodal force}} = \begin{Bmatrix} 30,\ 5 \\ 30,\ -5 \\ -30,\ -5 \\ -30,\ 5 \end{Bmatrix};\ \{X\}^{10^{-7}\text{ in.}} = \begin{Bmatrix} 0,\ -4 \\ 0,\ -4 \end{Bmatrix}$$

$$\{R\}^{\text{kip}} = \begin{Bmatrix} 30,\ 5 \\ 30 \\ -30 \\ -30,\ 5 \end{Bmatrix}$$

Chapter 14

14-1 $$\{F\} = \frac{3AE_s\ell^3 q}{16AE_s\ell^2 + 192E_aI}$$

$$\begin{Bmatrix} R_{\text{sup } A} \\ R_{\text{sup } B} \end{Bmatrix} = \begin{Bmatrix} \dfrac{3AE_s\ell^3 q}{16AE_s\ell^2 + 192E_aI} \\ \ell q - \dfrac{6AE_s\ell^3 q}{16AE_s\ell^2 + 192E_aI} \end{Bmatrix}$$

14-2 $R_{u1} = -R_{u2} = 50.05\,\text{kN}$

14-3 $T_{\text{R_left}} = -\dfrac{T_0\ell}{6}$, $T_{\text{R_right}} = -\dfrac{T_0\ell}{3}$

14-4 $H_{R_A} = -H_{R_B} = \dfrac{q\ell^2}{8h_0}$

$$V_{R_A} = V_{R_B} = \frac{q\ell}{2}$$

$$N = \frac{64h_0^2 xq\left(\frac{2x-1}{2}\right) - 32h_0^2\ell q\left(\frac{2x-1}{2}\right) + \ell^4 q}{8h_0\sqrt{\left(64h_0^2x^2 - 64h_0^2\ell x + \ell^4 + 16h_0^2\ell^2\right)}}$$

14-5 $V_{R_A} = V_{R_B} = \dfrac{q\ell}{2}$

$$H_{R_A} = -H_{R_B} = \frac{q\ell^2}{8h_0}\left(\frac{1}{1+\beta}\right)$$

$$\beta = \frac{15\ell I_0}{32h_0^3 A_0}\tan^{-1}\frac{4f}{\ell}$$

Area variation: $A = \dfrac{A_0}{\cos\varphi}$

Inertia variation: $I = \dfrac{I_0}{\cos\varphi}$

It is (A_0 and I_0 at crown, with $\varphi = 0$).

14-6 $\delta_{\text{center}} = -\dfrac{129.375}{EI}$; $\theta_A = -\dfrac{45}{EI}$

14-7 $\delta_{\text{center}} = -\left(\dfrac{45}{EI_{ab}} + \dfrac{675}{EI_{bc}}\right)$; $\theta_A = -\left(\dfrac{22.5}{EI_{ab}} + \dfrac{22.5}{EI_{bc}}\right)$

14-8 $\delta_B = -\dfrac{281250}{EI}$, $\theta_D = \dfrac{6250}{EI}$

14-9 $\dfrac{E_s}{E_a} = 3$

$$F_{\text{bar}} = \frac{15a^2A_cP}{12a^2A_c - 2I};\ \delta_c = \frac{156.26a^3}{E_sI} - \frac{8a^3P}{E_sI}$$

14-10 $R_A = R_C = \dfrac{q_{\max}\ell}{4}$

$$M_{RA} = -M_{RB} = \frac{5\ell^2 q}{96}$$

Index

Airy, George Biddel, xvii
Airy formulation, xv, 556
Aluminum, 28, 685
American Society of Testing and Materials (ASTM), 31
Angle of twist, 224
  calculation of, 615
  displacement, 25
  in composite shafts, 232–233
  relationship between strain and, 224–225
Archimedes, 42
Auxiliary structure, virtual force from, 508
Axial displacement, 25
Axial (normal) force, 7, 10, 687–688
  sign convention for, 18, 20

Back-substitution, 654–655
Bar(s), 2, 3
  composite, 121–122
  deformation, 25
  example of fixed, 571–578
  force in a truss, 115–118
  sketch for, 23
Bar elements
  equilibrium matrix for, 565–567
  flexibility matrix for, 567–568
  stiffness matrix for, 568–569
Bar member, truss, 55–56
  deformation, 74
  displacement, 72–73
  force analysis, 57–59
  force analysis of a composite bar, 60–62
  force analysis of a octahedral bar, 65–68
  force analysis of a tapered bar, 63–65
  free-body diagrams, 58–59
  interface forces, 59
  positive direction for forces, 59
  strain, 74–75
  stress, 68–70
Beam(s)
  axis of, 7
  column, 245
  deformation, 25
  dimensions of, 10
  formulas, 690–701
  members, 3
  sketch for, 23
Beams, indeterminate
  applications, 311
  clamped, 317–328, 548–549
  equations used to analyze, 311
  examples of, 312–314
  flexibility matrix, 329–337

Beams, indeterminate (*continued*)
integrated force method, 317–328, 345–350, 355–360
internal forces in, 315–317
mechanical load, 318–328
propped cantilevered, 345–351, 697–699
redundant force for, 605–612
redundant force for, supported by a tie rod, 615–622
response variables, 311
settling of support, 335–337, 343–344
stiffness method, 337–355, 360–366
strain energy, 325
thermal load, 333–334, 341–342
three-span, 352–366
Beams, simple
bending moment diagrams, 131, 134–152
boundary conditions, 132–134
built-up, and interface shear force, 197–202
cantilevered, 39–40, 129, 130, 586–592, 624–625, 690–693
composite, 202–209
coordinate axes, 120–130
curvature, 154, 155
displacement/deflection, 132, 164–179
examples of, 129, 130
fixed, 699–701
flexure formula, 153–159
internal forces, analysis of, 131–148
neutral plane, 130–131, 154
relationships between bending moment, shear force, and load, 149–152
settling of supports, 183–184
shear center, 184–197
shear force diagrams, 134–148
shear stress formula, 159–164
simply supported, 129, 130, 546–548, 625–626, 693–697
strain, calculating, 165–170
thermal displacement in, 179–183
Beltrami, Eugenio, xvii
Bending moment, 11, 15–16, 689
beam, 131, 134–152
sign convention for, 18, 21
Bernoulli, Jacob, xvii, 32, 48, 154, 164
Bernoulli, Johan, xvii
Bernoulli's formula, 49
Betti's theorem, 541–544
Bifurcation point, 477–478
Boundary compatibility condition (BCC), ix–x
Boundary conditions, ix, 132–134
Boussinesq, Joseph, xvii
Brahe, Tyco, 42
Buckling
See also Column buckling
equation, 481–487
parameter, 481
point, 477
Built-up beams and interface shear force, 197–202

Cantilevered beams, 39–40, 129, 130, 586–592, 624–625, 690–693
propped, 345–351, 697–699
Cantilevered shafts, 218, 219
Castigliano, Alberto, xvii
Castigliano's first theorem, 523–526
Castigliano's second theorem, 93–96, 537–539
Cauchy, Augustin, ix, xvii
Celsius, 4
Centroid, 660
Channel section, 184
Choleski method, 652–655
Circular shafts, power transmission and, 233–236
Clapeyron, Émile, xvii
Clebsch, Alfred, xvii
Coefficient of linear expansion, 29–30
Column buckling
effective length of column, 487–488
equilibrium, 478–479
equilibrium equations, 479–481
features of, 475–478
secant formula, 488–492
solution of buckling equation, 481–487
Columns
clamped, 483–485, 487–488
clamped-free, 487–488
clamped-pinned, 485–488
simply supported, 481–483, 487–488
Compatibility condition (CC), ix, x, xii
bars, fixed, 573–575
beams, 317
finite element method, 557

frame, 405
null property, 273
shafts (indeterminate), 375–376
trusses (indeterminate), 269–270
trusses (single-bay), 582–584
Compatibility matrix, xiii, 562
beams (cantilevered), 588–589
frame, 412
shaft, 376
Complementary energy, principle of, 534–537
Complementary strain energy, 499–500
of total deformations, 503–504
Complementary virtual work
concept, 509
principle of, 528–534
Complementary work, 504–505
Completed Beltrami-Michell formulation (CBMF), xv, xvii, 555, 556
Composite bars, force analysis of a, 60–62, 121–122
Composite beams, 202–209
Composite shafts, angle of twist in, 232–233
Compression, 475
Computer code, 703–715
Concrete, 203
Conjugate beam concept, 622–626
Coulomb, Charles A., viii, xvii, 48, 154, 223
Coulomb's solution, 49
Critical point, 478
Curvature, beam, 154, 155
moment curvature relationship (MCR), 168–170

Deflection, beam, 132, 164–179
Deformable bodies principle of
virtual work for, 512–515
Deformation, 7, 25–26
bar member, 74
energy, 89–90
force deformation relations (FDR), xi, 92–93
initial, in a determinate truss, 96–97
initial, in a indeterminate truss, 270–272
kinematics of, 155–159
shaft, 224–233
strain energy of total, 500–503
strain energy of total, complementary, 503–504
Deformation displacement relation (DDR), xi–xii
shafts (indeterminate), 373
trusses (determinate) and, 85–87, 92
trusses (indeterminate) and, 268
Degree
temperature, 4
used to measure angles, 4
Degrees of freedom (dof), six displacement, 42
Delamination, 204
Density, 29
Determinants, 655
Determinate analysis, theory of, xi–xii, 104–112
Dialogues Concerning Two New Sciences (Galileo), xvii
Discretization, 557, 559, 562
Displacement, 1, 7, 25
bar member, 72–73
beams, 132, 164–183
Castigliano's second theorem for calculating, 93–96
deformation displacement relation (DDR), 85–87, 92
energy principle determination of, 89–91
equilibrium equation expressed in, 480, 520–521
graphical determination of, 87–89
nodal, 85–96
sign convention for, 25
small-displacement theory, 38–40
trusses (indeterminate), 274–275
unit displacement theorem, 526–528
virtual, 505–507
Displacement method. *See* Stiffness method
Dual integrated force method. *See* Integrated force method, dual
Ductility, 29, 35–36
Duhamel, Jean-Marie, xvii

Eccentricity and approximation of force, 12–14
Eigenvalue problem, 655–657
Eigenvalue property, 449
Eigenvector, 449

Elastic curve, 132, 164
Elasticity, 1
Elasticity, modulus of. *See* Young's modulus
Elastic limit, 34
Elastic region, 32–33
Energy
  strain, 35, 89–90
  work-energy conservation theorem, 91
Energy principle determination of displacement, 89–91
Energy theorems
  Betti's theorem, 541–544
  Castigliano's first theorem, 523–526
  Castigliano's second theorem, 93–96, 537–539
  complementary energy, principle of, 534–537
  Maxwell's reciprocal theorem, 544–546
  minimum potential energy, principle of, 515–523
  superposition, principle of, 546–550, 626–628
  unit displacement, 526–528
  unit load, 539–541
  virtual work, principle of, 509, 511–515
  virtual work, principle of complementary, 528–534
Energy theorems, basic concepts
  strain energy, 498–499
  strain energy, complementary, 499–500
  strain energy of total deformations, 500–503
  strain energy of total deformations, complementary, 503–504
  summary of, 510
  virtual displacement, 505–507
  virtual force, 507–508
  virtual work, 508–509
  virtual work, complementary, 509
  work, 504
  work, complementary, 504–505
Engesser, Friedrich, xviii
Equilibrium
  neutral, 479
  stable, 478–479
  unstable, 479
Equilibrium equations (EE), xi
  bars, fixed, 572–573
  beams, 315
  column buckling and, 479–481
  development of, 42
  expressed in displacement, 480, 520–521
  expressed in moment, 480
  frames, 408
  Navier's table problem, 47–49, 629–633
  null property, 273
  from potential energy function, 521–523
  shafts (indeterminate), 372–373
  sign convention for, 43, 681–684
  three-legged table problem, 44–46
  trusses (determinate) and, 79–81
  trusses (indeterminate) and, 266–267
  virtual force from, 507–508
Equilibrium matrix, 562, 565
  beam, 319
  for bar elements, 565–567
  frame, 408
  notation, 80–81
  for rectangular membranes, 569–570
  shaft, 376
  truss, 267
Euler, Leonhard, xvii, 164
External load, 1
  potential of, 518–520

Factorization, 652–654
Fahrenheit, 4
Field equation, ix
Finite element method
  basic concepts, 557–559
  cantilevered beam example, 586–592
  dual integrated force method equations, 561
  fixed bar example, 571–578
  integrated force method equations, 559–561
  matrices, 562–571
  single-bay truss example, 578–586
  stiffness method equations, 561
Finite elements, 559
Flexibility matrix, 329–337, 562
  for bar elements, 567–568
  bars, fixed, 573
  beams (cantilevered), 589–590
  frame, 412
  for rectangular membranes, 570
  shaft, 376

Flexure formula, 153–159
Foople, August, xviii
Foot (ft), 4
Force(s)
axial (normal), 7, 10, 18, 20
beam internal, analysis of, 131–148, 315–317
converting measurements, 7, 9
dimension of, 4, 8, 7
eccentricity and approximation, 12–14
integrated force method, xiii, 274
interface, 59
redundant force method, xiv
shear (transverse), 7, 11, 18–19, 21, 134–152
trusses (determinate), 274
virtual, 507–508
Force analysis
of a composite bar, 60–62
of a octahedral bar, 65–68
of a tapered bar, 63–65
Force deformation relation (FDR), xi
shafts (indeterminate), 373–374
trusses (determinate) and, 92–93
trusses (indeterminate) and, 269
Force method, 555
Fracture stress, 35
Frame member, 3, 20, 21
deformation, 25–26
sketch for, 23
Frames, indeterminate
integrated force method, 407–420, 427–429, 431–434
portal, with mechanical load, 405–406
portal, with thermal load, 425–431
settling for support, 431–436
stiffness method, 421–425, 429–431
Frames, simple
Galileo's problem, 256–259
L-, 246–250
leaning column, 254–256
L-Joint, 250–253
support, 239–245
Free-body diagrams, 58–59

Galileo, xvii, 2, 48, 49, 129, 154
cantilever experiment, vii–viii
strength and resistance problem, 256–259
Gallagher, Richard H., xix
Gauge length, 31
Geometrical linearity, 38–40
Graphical determination of displacement, 87–89
Gravity, acceleration, 8
Greene, Charles, xvii

Hogging moment, 19
Horsepower, 233
Hooke, Robert, viii, xvii, 30
Hooke's law, 30–31, 33, 166–167
Hybrid method, xiv, xv, 556

I-section, 184
Indeterminate analysis, xii–xiii
Initial deformation
in a determinate truss, 96–97
in a indeterminate truss, 270–272
Integrated force method (IFM), xiii
bars, fixed, 571–572
beams (cantilevered), 587–588
beams (indeterminate), 317–328
beams (propped cantilevered), 345–350
beams (supported by tie rods), 615–622
beams (three-span), 355–360
design model, 407
equations, 559–561
frames (indeterminate), 407–420, 427–429, 431–434
reaction model, 407
shafts (indeterminate), 376–379
standard model, 407–420
stress calculation, 591
trusses (indeterminate), 274, 275–289
trusses (single-bay), 579–581
Integrated force method, dual (IFMD), 274–275, 289–296
bars, fixed, 575–577
beams (cantilevered), 590–591
compatibility matrix, 561
equations, 561
trusses (single-bay), 584–586
Interface forces, 59
shear force and built-up beams, 197–202
Internal forces of beams, analysis of, 131–148m, 315–317

Internal torque, shafts and, 218–222
International System of Units. *See* SI

Jourawski, D. J., xvii

Kelvin (K), 4
Kepler, J., 42
Kilogram (kg), 4
Kirchhoff, Gustav Robert, xvii

Lagrange, Joseph-Louis, xvii
Lame, Gabriel, xvii
Latural contraction, 33
Leaning column, 254–256
Leonardo da Vinci, xvii, 42
Levy, Maurice, xix
L-frame, 246–250
L-Joint, 250–253
Linearity
  geometrical, 38–40
  material, 38
Line of action, 7
Load
  See also Mechanical load; Thermal load
  -carrying capacity, 16
  external, 1, 518–520
  relationships between bending moment, shear force, and, 149–152
  sign conventions for, 15, 16
  unit load theorem, 539–541
Love, A. E. H., xviii

Mass density, 29
Material linearity, 38
Material properties, 28
  Brittle, 35
  coefficient of linear expansion, 29–30
  density, 29,
  ductility, 29, 35–36
  elastic, 28
  flexure formula, 154
  isotropic, 28
  Poisson's ratio, 29, 33–34
  shear modulus, 29, 34
  strength of, 37–40
  Young's modulus, 29, 33
Matrix algebra (matrices)
  determinants, 655
  eigenvalue problem, 655–657
  finite element methods, 562–571
  operations, 649–652
  notation, 80–81, 645–647
  types of, 647–649
Matrix equation, solution of, 652–655
Maxwell, James Clerk, xvii
Maxwell's reciprocal theorem, 544–546
Mechanical load, 1
  beams (indeterminate), 318–328, 339–341
  frames (portal), 405–406
  stiffness method, 339–341
  trusses (indeterminate), 271, 276–279, 291, 293
Mechanical properties, 685–686
Meter (m), 4
Method of section, 61–63
Michell, John Henry, xviii
Minimum potential energy, principle of, 515–523
Möbius, August Ferdinand, xvii
Modulus of elasticity. *See* Young's modulus
Mohr, Otto, xvii, 453
Mohr's circle for plane stress, 453–456
Moment
  equilibrium equation expressed in, 480
  hogging, 19
  of inertia, 154, 665–674
  of inertia (polar), 667–669
  sagging, 19
  sign convention for external, 15–16, 17
Moment curvature relationship (MCR), 168–170
Muller-Breslau, H., xviii

Navier, Claude Louis Marie Henri, xiv, xvii, 154, 274
Navier formulation, xv, 555, 556
Navier's table problem, 47–49, 629–633
Necking, 35
Neumann, Franz, xvii
Neutral axis, 130
Neutral plane, 130–131, 154
Newton, Isaac, xvii, 42
Newton (N), 7
Nodal displacement, 85–96
Normal *(n)* sign convention, 15–16, 25
Normal strain, 27
Normal stress, 26–27
Null property, 273

Octahedral bar
force analysis, 65–68
strain in, 75–76
stress in, 70–72
Ostrogradsky, Mikhail V., xvii

Parallel-axis theorem, 669–674
Pascal, 33
Percent elongation, 35
Piola, Gabrio, xvii
Plane area, properties of, 659–675
Plane stress, 442–445
Mohr's circle for, 453–456
Plastic region, 35
Plate, stress in, 441–442
Poisson, Simeon-Denis, xvii
Poisson's effect, 27, 154
Poisson's ratio, xvii, 29, 33–34, 154
Polar moment of inertia, 667–669
Poncelet, Jean Victor, xvii
Potential energy, principle of minimum, 515–523
Pound-force (lbf), 4
Power transmission, circular shafts and, 233–236
Pressure vessels, stress in, 463
in cylindrical, 466–470
in spherical, 463–465
Principal stress, 448–453
properties of, 456–462
Product of inertia, 669
Pure flexure condition, 154–155
Pure torsion, 223

Radian (rad), 4
Radius of gyration, 666
Rayleigh, Lord, xvii
Rectangular membranes
elemental equilibrium matrix for, 569–570
flexibility matrix for, 570
stiffness matrix for, 570–571
Redundant force method, xiv, 275, 531–533, 555, 556, 557
basis structures, force solution, 597–600
basis structures, types of, 595–597
for beams, 605–612
beams supported by tie rods, 615–622
calculation of, 600–603
calculation of displacement, 603–605
integrated force method, 618–622
for shafts, 613–615
steps, 595–605
Reissner method, 556
Response calculation, 1
Response variables
See also under type of
deformation, 7, 25–26
description of, 637–640
displacement, 7, 25
force, 7, 10–14
strain, 7, 27
stress, 7, 26–27
Right-hand rule, 16, 19
Rigid body, principle of virtual work for, 509, 511–515
Ring problem, 633–637
Ritz, Walter, xviii
Rotation, displacement, 25

Sagging moment, 19
Saint-Venant, Adhémar Jean Claude Barré de, ix, xvii, 223
Savart, Felix, xvii
Secant formula, 488–492
Second (s), 4
Secondary stress analysis, 55
Self-stress matrix, derivation of, 533–534
Settling of support
in beams (indeterminate), 335–337, 343–344
in beams (simple), 183–184
in frames (indeterminate), 431–436
stiffness method for, 303–305, 343–345, 434–436
in a trusses (determinate), 101–104
in a trusses (indeterminate), 270–272, 281–283, 294–296
Shaft members, 3
sketch for, 23
Shafts, determinate
angle of twist, 224–225, 232–233
applications, 217
circular, 233–236
composite, 232–233
deformation, 224–233
power transmission, 233–236
torque, analysis of internal, 218–222
torsion formula, 222–224, 225

Shafts, indeterminate
applications, 371
compatibility conditions, 375–376
deformation displacement relation, 373
equations used to analyze, 371
equilibrium equations, 372–373
force deformation relation, 373–374
integrated force method, 376–379
stiffness method, 379–400
Shafts, redundant force for, 613–615
Shear center, beams and, 184–197
Shear deformation, 25
Shear flow
direction of, 186
formula, 201, 202
magnitude of, 186–189
Shear force, 7, 11, 688–689
beams and shear force diagrams, 134–148
built-up beams and interface, 197–202
relationships between bending moment, load, and, 149–152
sign convention for, 18–19, 21
Shear modulus, 29, 34
Shear strain, 27
Shear stress, 26
Shear stress formula, 159–164, 201, 202
Shells, 3
SI (International System of Units)
base units, 4
converting to USCS, 8, 9
Sign conventions
determinate analysis, xi
for equilibrium equations, 43, 681–684
indeterminate analysis, xii–xiii
normal *(n)*, 15–16, 25
right-hand rule, 16, 19
tensor *(t)*, 15, 17–23, 26, 27
Slenderness ratio (SR), 12
Slug, 8
Small-displacement theory, 38–40
Stability problem, 478
Steel, 28, 685
Stiffness matrix, 274
for bar elements, 568–569
for rectangular membranes, 570–571
Stiffness method, xiii–xiv, 555, 556
bars, fixed, 577–578
beams (cantilevered), 591–592
beams (indeterminate), 337–355
beams (propped), 350–351
beams (three-span), 360–366
equations, 561
frames (indeterminate), 421–425, 429–431
for mechanical load, 339–341
for settling of support, 303–305, 343–344, 434–436
shafts (indeterminate), 379–400
for thermal load, 300, 341–342
trusses (indeterminate), 274–275, 296–300
trusses (single-bay), 584–586
trusses (three-bar), 515–518
Stokes, George Gabriel, xvii
Strain, 1, 7, 27
in bar member, 74–75
in beams, 165–170
displacement, 476
formulation, ix, 687
gauges, 31–32
hardening, 35
normal versus shear, 27
in octahedral bar, 75–76
ratio of stress and, 33
relationship between angle of twist and, 224–225
sign convention for, 27
Strain energy, 35, 89–90
basic concept, 498–499
Castigliano's first theorem, 523–526
Castigliano's second theorem, 93–96, 537–539
complementary, 499–500
of total deformations, 500–503
of total deformations, complementary, 503–504
Strength of materials
assumptions of, 37–40
defined, 1
historical development, xvii–xix
list of scientists who contributed to, xviii
structures and members, 2–3
terminology, 2
Stress, 7
in bar member, 68–70
beam, 158
formulation, ix, 687
fracture, 35
frame, 245
measuring, 31

normal versus shear, 26–27, 68
in octahedral bar, 70–72
in a plane, 442–445, 453–456
in a plate, 441–442
in pressure vessels, 463
in pressure vessels (cylindrical), 466–470
in pressure vessels (spherical), 463–465
principal, 448–453, 456–462
ratio of, and strain, 33
shaft, 222
sign convention for, 26
transformation rule, 445–448
Stress-strain diagram, 32, 33
Stress-strain relation, buckling and, 475
Structural axis, 7, 10
Superposition, principle of, 546–550, 626–628
Support settling. *See* Settling of support
System of units, 4–6, 677–680

Tapered bar, force analysis of a, 63–65
Temperature
beam deformation due to changes in, 179–183
converting from one scale to another, 30
Tension test, 31
Tensor *(t)* sign convention, 15, 17–23, 26–27
Tensor transformation rule, 445–448
Test coupon, 31
Theory of structures, 1
Thermal displacement in beams, 179–183
Thermal effect
in a beam, 329–330
in a truss, 99–101
Thermal load, 1
beams (indeterminate), 333–334, 341–342
first, 301–302
frame (indeterminate), 425–431
second, 302–303
stiffness method for, 300, 341–342
trusses (indeterminate), 271–272, 279–281, 293–294
Three-legged table problem, 44–46
Timoshenko, S. P., xviii
Torque, 12
deformation, 25
formula, 222–224, 225, 690
shafts and analysis of internal, 218–222
sign convention for external, 16, 18
sign convention for internal, 19–20, 21
Torsion formula, 222–224, 225
Total formulation, xiv, xv, 556
Transverse displacement, 25
Transverse force. *See* Shear force
Trusses, determinate
applications for, 55
bar force in, 115–118
bar member, 55–65
bar member deformation, 74
bar member displacement, 72–73
bar member strain, 74–75
bar member stress, 68–70
composite bar, 121–122
defined, 1
defining and solving a truss problem, 76–85
determinate analysis, theory of, 104–112
external versus internal, 113
initial deformation, 96–97
net area of angle section, 118–119
nodal displacement, 85–96
settling of support, 101–104
thermal effect, 99–101
two-dimensional, 113–120
Trusses, five-bar example
bar deformation, 85
bar strain, 84–85
bar stress, 84
coordinates of nodes, 76, 77
deformation displacement relation, 85–87, 92
determinate analysis, theory of, 104–105, 110–112
equilibrium equations, 79–81
equilibrium of reaction and load, 83–84
force deformation relation, 92–93
loads, external, 78–79
member properties, 77–78
reactions calculated, 82–83
support conditions, 76
Trusses, indeterminate
advantages of, over determinate trusses, 263
compatibility conditions, 269–270
deformation displacement relation, 268
displacement, 274–275
equations used to analyze, 263
equilibrium equations, 266–267
examples of, 263–266
force deformation relation, 269

Trusses, indeterminate (*continued*)
initial deformation, 270–272
integrated force method, 274, 275–289
integrated force method, dual, 274–275, 289–296
mechanical load, 271, 276–279, 291, 293, 339–341
null property, 273
response variables, 273
settling of support, 270–272, 303–305
stiffness method, 274–275, 296–300, 303–305
thermal load, 271–272, 279–281, 293–294, 341–342
Trusses, nine-bar, six-node example, 106–110
Trusses, single-bay, 578–586
Trusses, three-bar, 515–518, 549–550
Two-dimensional structures
examples of, 441
Mohr's circle for plane stress, 453–456
principal stress, 448–453
principal stress, properties, 456–462
stress in cylindrical pressure vessels, 466–470
stress in pressure vessels, 463
stress in spherical pressure vessels, 463–465
stress state (plane), 442–445
stress state (plate), 441–442
stress transformation rule, 445–448
Two-dimensional trusses, 113–120

Unit displacement theorem, 526–528
U.S. Customary System (USCS)
base units, 4
converting to SI, 8, 9
Unit load theorem, 539–541

Variables. *See* Response variables
Vector, 25
Virtual displacement, 505–507
Virtual force, 507–508
Virtual work
basic concept, 508–509
principle of, 509, 511–515
Virtual work, complementary
concept, 509
principle of, 528–534
Voigt, Woldemar, xviii
Volume, 29

Washizu method, 556
Weight density, 29
Whipple, Squire, xvii
Williot, J. V., 87
Winkler, Emile, xvii
Wood, 204
Work, 90–91, 504
complementary, 504–505
energy conservation theorem, 91
virtual, basic concept, 508–509
virtual, complementary, 509
virtual, principle of, 509, 511–515
virtual, principle of complementary, 528–534

Yielding zone, 34–35
Yield point, 34
Yield stress, 34
Young, Thomas, xvii
Young's modulus, 29, 33

Zhuravskii, D. I. *See* Jourawski, D. J.